STATE OF ILLINOIS
DEPARTMENT OF TRANSPORTATION

* Granular or solid flux filled headed studs conforming to Article 1006.32 of the Std. Specs., automatically end welded.

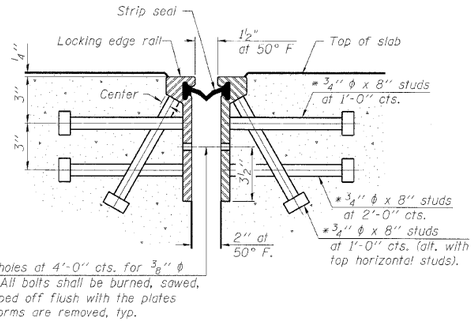

SECTION THRU
ROLLED RAIL JOINT

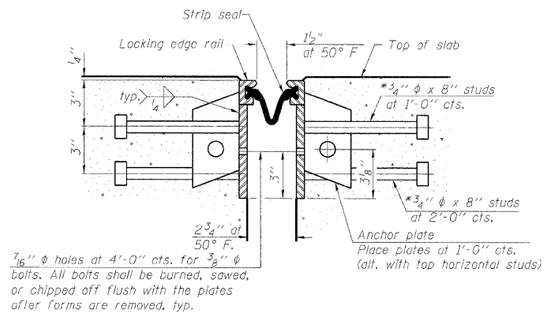

SECTION THRU
WELDED RAIL JOINT

Notes:

The strip seal shall be made continuous and shall have a minimum thickness of ¼". The configuration of the strip seal shall match the configuration of the Locking Edge Rails. Open or "webbed" strip seal gland configurations are not permitted. The gland shall be sized for a maximum rated movement of 4 inches.

The height and thickness of the Locking Edge Rails shown are minimum dimensions. The actual configuration of the Locking Edge Rails and matching strip seal may vary from manufacturer to manufacturer. Flanged edge rails will not be allowed. Locking Edge Rails may be spliced at slope discontinuities and stage construction joints.

The manufacturer's recommended installation methods shall be followed.

The joint opening and deck dimensions detailed on the superstructure are based on a rolled rail expansion joint. If the Contractor elects to use the welded rail expansion joint, the opening and deck dimensions shall be modified according to the dimensions detailed on this sheet. Required modifications shall be made at no additional cost to the State.

All steel components shall be galvanized after fabrication according to Article 520.03 of the Standard Specifications.

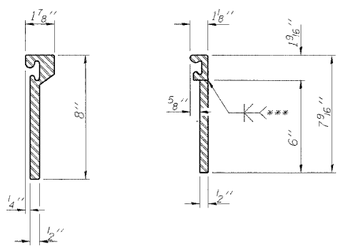

ROLLED
EXTRUDED RAIL

WELDED RAIL

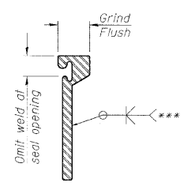

***Back gouge not required if complete joint penetration is verified by mock-up.

LOCKING EDGE
RAIL SPLICE

The inside of the locking edge rail groove shall be free of weld residue.

LOCKING EDGE RAILS

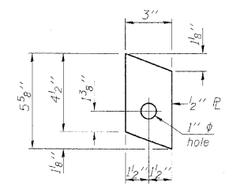

ANCHOR ℙ
(for welded rail)

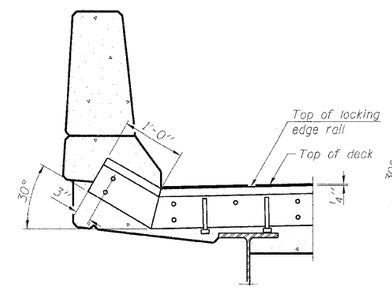

AT PARAPET

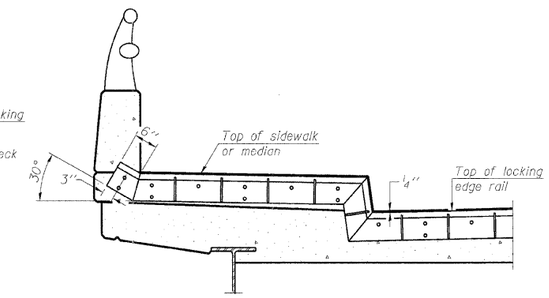

AT SIDEWALK OR MEDIAN

Shorter plates with a single row of studs at 12" cts. may be necessary on medians which are shallower than 9". See manufacturer's recommendation.

TYPICAL END TREATMENTS

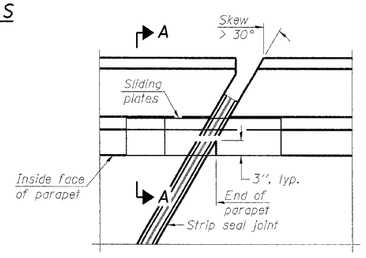

PLAN

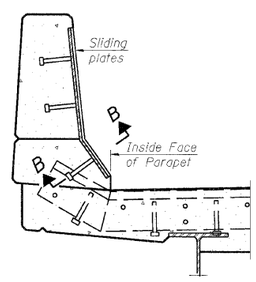

SECTION A-A

POINT BLOCK DETAILS
(for skews > 30°)

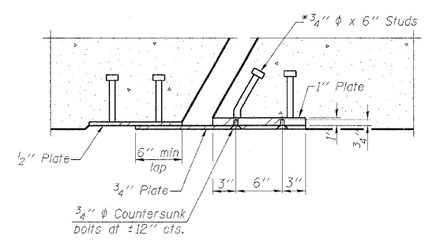

SECTION B-B

BILL OF MATERIAL

Item	Unit	Total
Preformed Joint Strip Seal	Foot	123.0

PREFORMED JOINT STRIP SEAL
STRUCTURE NO. 022-0111

DESIGNED -	MFB
CHECKED -	KWS
DRAWN -	RMG
CHECKED -	KWS

EJ-SSJ

10-1-08

benesch

alfred benesch & company
Engineers • Surveyors • Planners
205 North Michigan Avenue, Suite 2400
Chicago, Illinois 60601
312-565-0450 Job No. 10050

SHEET NO. 12	F.A.I. RTE.	SECTION	COUNTY	TOTAL SHEETS	SHEET NO.
28 SHEETS	290/355	22(1, 1-1, 2&3)RS-7	DUPAGE	546	457
			CONTRACT NO. 60G51		
	FED. ROAD DIST. NO.	ILLINOIS	FED. AID PROJECT		

x:\10000s\10050\engineering_documents_contract_1\SN_022_0111_0112_Lake_St\0111-60G51-012-Stripseal.dgn 18:16:55 11\12\2009