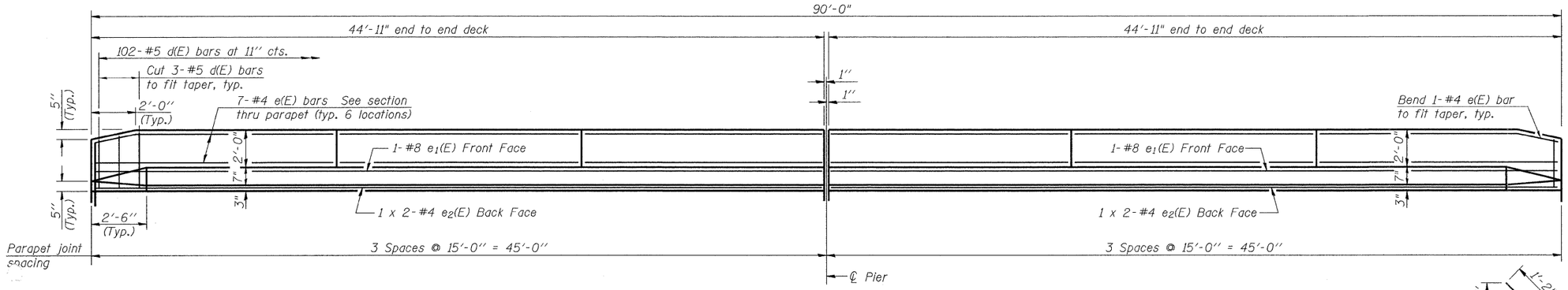

INSIDE ELEVATION OF PARAPET

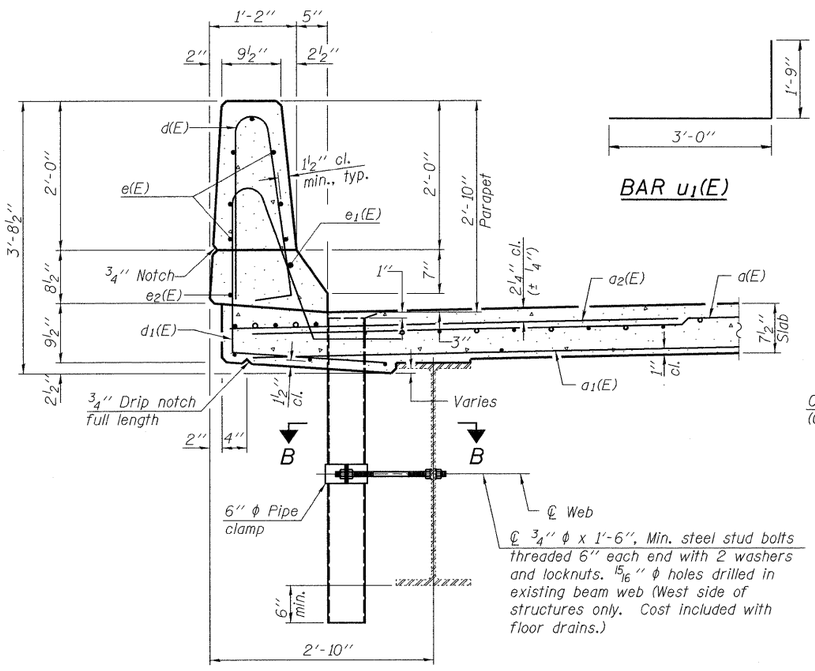

SECTION THRU PARAPET

BAR u1(E)

MIN. BAR LAP

#4 bar = 1'-4"

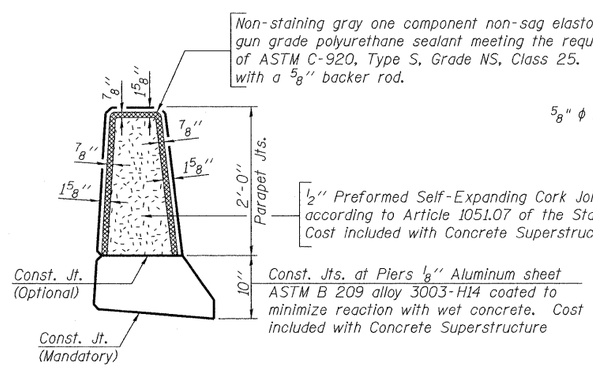

PARAPET JOINT DETAILS

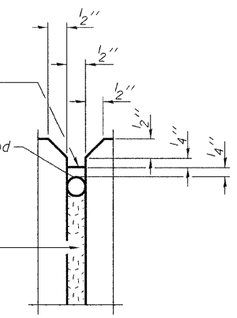

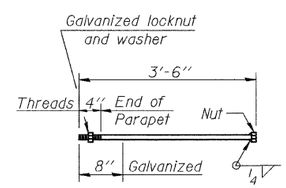

1" ϕ ANCHOR BOLT

(Cost included with Concrete Superstructure.)

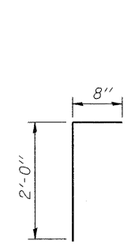

BAR s(E)

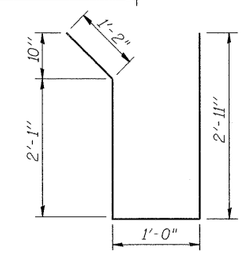

BAR s1(E)

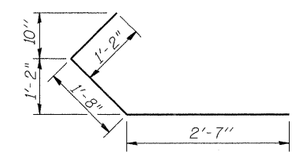

BAR u(E)

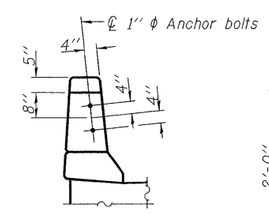

VIEW C-C

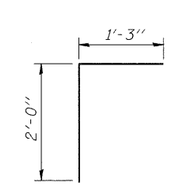

BAR v(E)

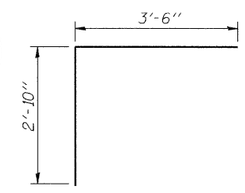

BAR x(E)

SUPERSTRUCTURE BILL OF MATERIAL (E.B. & W.B. STRUCTURES)

Bar	No.	Size	Length	Shape
a(E)	504	#5	15'-6"	
a1(E)	504	#5	18'-2"	
a2(E)	288	#6	4'-6"	
b(E)	156	#5	44'-7"	
b1(E)	248	#5	23'-2"	
d(E)	408	#5	5'-7"	
d1(E)	408	#5	7'-7"	
e(E)	168	#4	14'-8"	
e1(E)	8	#8	44'-8"	
e2(E)	16	#4	23'-0"	
m(E)	40	#6	8'-4"	
m1(E)	16	#6	19'-5"	
m2(E)	16	#6	17'-0"	
m3(E)	8	#6	14'-11"	
m4(E)	8	#6	17'-7"	
m5(E)	96	#6	5'-8"	
m6(E)	24	#6	4'-0"	
m7(E)	8	#6	6'-4"	
s(E)	116	#5	2'-8"	
s1(E)	100	#5	7'-3"	
u(E)	16	#5	5'-5"	
u1(E)	16	#5	4'-9"	
v(E)	140	#5	3'-3"	
v1(E)	28	#5	3'-6"	
x(E)	216	#5	6'-4"	
Reinforcement Bars, Epoxy Coated			Pound	47,400
Concrete Superstructure			Cu. Yd.	235.1
Bar Splicers			Each	700
Protective Coat			Sq. Yd.	800
Bridge Deck Grooving			Sq. Yd.	607

Bars indicated thus 1 x 2-#4 etc. indicates 1 line of bars with 2 lengths per line.

Notes:

The exterior surfaces of the floor drains shall be painted with the finish coat as specified in the special provisions for Cleaning and Painting New Metal Structures. The exterior surfaces of the drains shall be cleaned according to Society of Protective Coatings Spec. SSPC-SP1 prior to painting.

Fiberglass pipe shall conform to ASTM D 2996, with short-time rupture strength hoop tensile stress of 30,000 p.s.i. minimum.

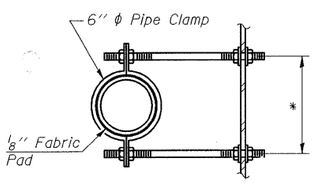

SECTION B-B

*Dimension as required by Pipe Clamp

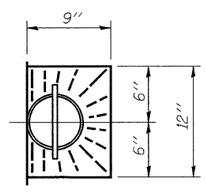

TOP PLAN

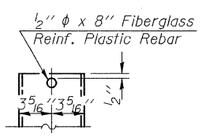

FIBERGLASS PIPE

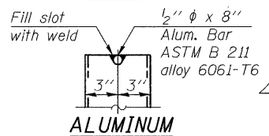

ALUMINUM TUBE

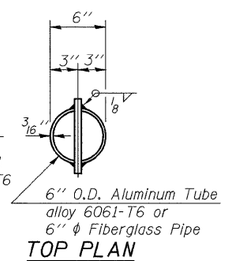

TOP PLAN

(Showing Aluminum Tube)

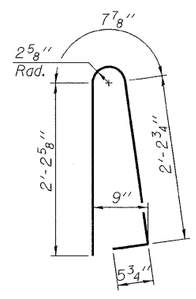

BAR d(E)

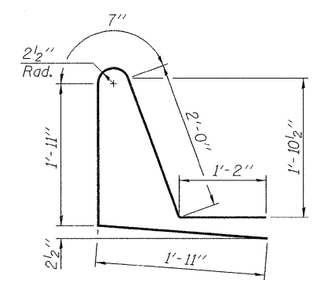

BAR d1(E)

rjngroup

Excellence through Ownership

200 West Front Street
Wheaton, IL 60187

DESIGNED: WJV
CHECKED: BLB
DATE: 04/02/09

SUPERSTRUCTURE DETAILS
IL RTE. 56 OVER BLACKBERRY CREEK
STATION 202+10.00
STRUCTURE NO. 045-0026 (E.B.)
STRUCTURE NO. 045-0027 (W.B.)

SHEET NO. 8	F.A.P. RTE.	SECTION	COUNTY	TOTAL SHEETS	SHEET NO.
17 SHEETS	573	61B-BR-1	KANE	37	20
			CONTRACT NO. 62817		
	FED. ROAD DIST. NO. 7	ILLINOIS	FED. AID PROJECT		

5/6/2009 Default k:\1182532\final plans\deck plan.dgn