| ROUTE NO. | SECTION | COUNTY | TOTAL SHEETS | SHEET NO. |
|---|---|---|---|---|
| FAI 55 | * | Will | 72 | 34 |
| FED. ROAD DIST. NO. 7 | | ILLINOIS | FED. AID PROJECT- | |

SHEET NO. 6
19 SHEETS

Contract #62930 * 88(B&B-1)BR

* Granular or solid flux filled headed studs conforming to Article 1006.32 of the Std. Specs., automatically end welded.

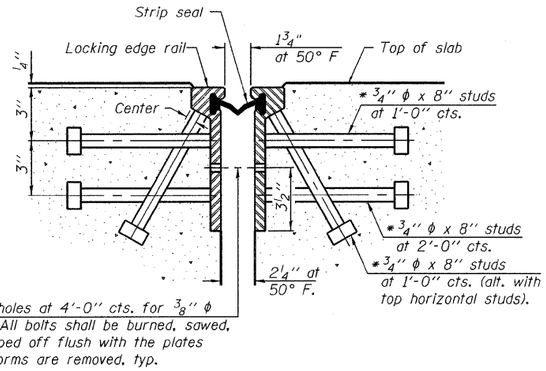


## SECTION THRU ROLLED RAIL JOINT

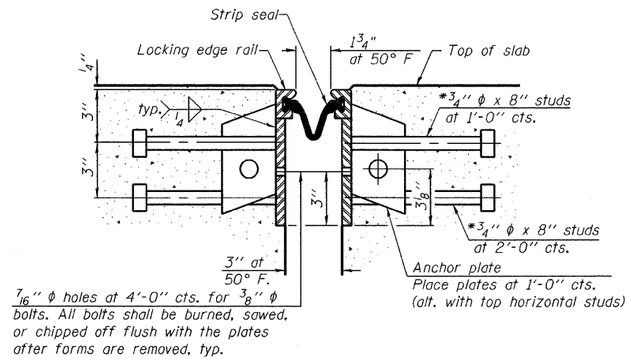


## SECTION THRU WELDED RAIL JOINT

Notes:

The strip seal shall be made continuous and shall have a minimum thickness of $\frac{1}{4}''$. The configuration of the strip seal shall match the configuration of the Locking Edge Rails. Open or "webbed" strip seal gland configurations are not permitted. The gland shall be sized for a maximum rated movement of 4 inches.

The height and thickness of the Locking Edge Rails shown are minimum dimensions. The actual configuration of the Locking Edge Rails and matching strip seal may vary from manufacturer to manufacturer. Flanged edge rails will not be allowed. Locking Edge Rails may be spliced at slope discontinuities and stage construction joints.

The manufacturer's recommended installation methods shall be followed.

The joint opening and deck dimensions detailed on the superstructure are based on a rolled rail expansion joint. If the Contractor elects to use the welded rail expansion joint, the opening and deck dimensions shall be modified according to the dimensions detailed on this sheet. Required modifications shall be made at no additional cost to the State.

All steel components shall be galvanized after fabrication according to Article 520.03 of the Standard Specifications.

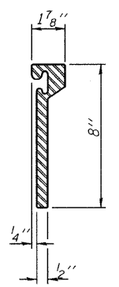


ROLLED EXTRUDED RAIL

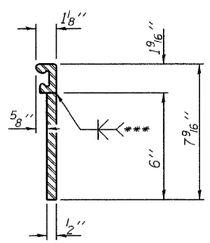


WELDED RAIL

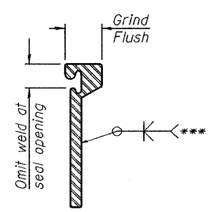


***Back gouge not required if complete joint penetration is verified by mock-up.

LOCKING EDGE RAIL SPLICE

The inside of the locking edge rail groove shall be free of weld residue.

LOCKING EDGE RAILS

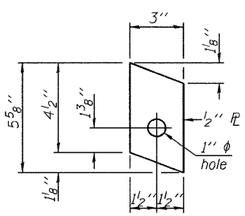


ANCHOR PL
(for welded rail)

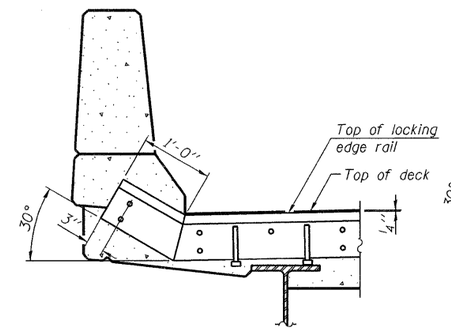


AT PARAPET

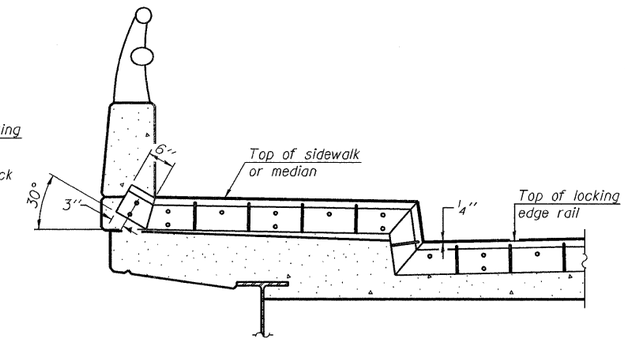


AT SIDEWALK OR MEDIAN

Shorter plates with a single row of studs at 12'' cts. may be necessary on medians which are shallower than 9''. See manufacturer's recommendation.

TYPICAL END TREATMENTS

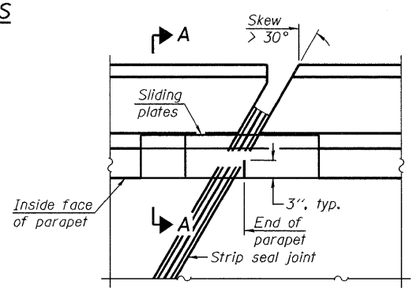


PLAN

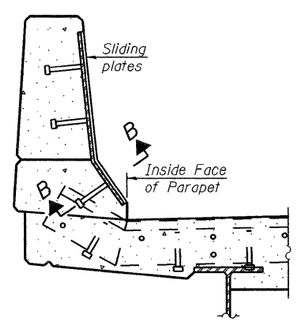


SECTION A-A

POINT BLOCK DETAILS
(for skews > 30°)

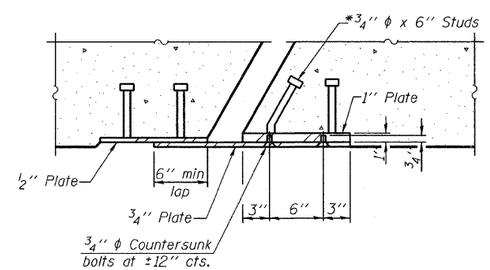


SECTION B-B

BILL OF MATERIAL

| Item | Unit | Total |
|---|---|---|
| Preformed Joint Strip Seal | Foot | 92 |
| | | |

ILLINOIS DEPARTMENT OF TRANSPORTATION

SHEET TITLE: PREFORMED JOINT STRIP SEAL

PROJECT: I-55 NB OVER KANKAKEE RIVER
FAI ROUTE 55, SECTION 88(B&B-1)BR
WILL COUNTY
SN 099-0001

PROJECT NO. 03095-16
SCALE
DATE 6/25/09
DRAWN BY TFG
CHECKED BY MCB
DRAWING NO. 6 OF 19 SHTS

COOMBE-BLOXDORF P.C.
Engineers / Land Surveyors
Springfield, Illinois
Design Firm License No. 184-002703

EJ-SSJ 10-1-08

PLOT DATE = 6/25/2009
FILE NAME = ...\sn-099-0001-sht-5-preformed-joint-strip-seal.dgn
PLOT SCALE = 012.0588 '\' / IN.
USER NAME = JAL