Notes:
Space reinforcement in cap to miss anchor bolts.
Pour steps monolithically with cap.
For details of piles and encasement, see sheet 32 of 36.
For details of Bar Splicers see sheet 33 of 36.

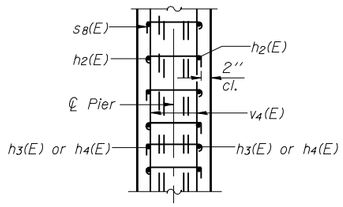

SECTION THRU WALL SHOWING s8(E) BARS

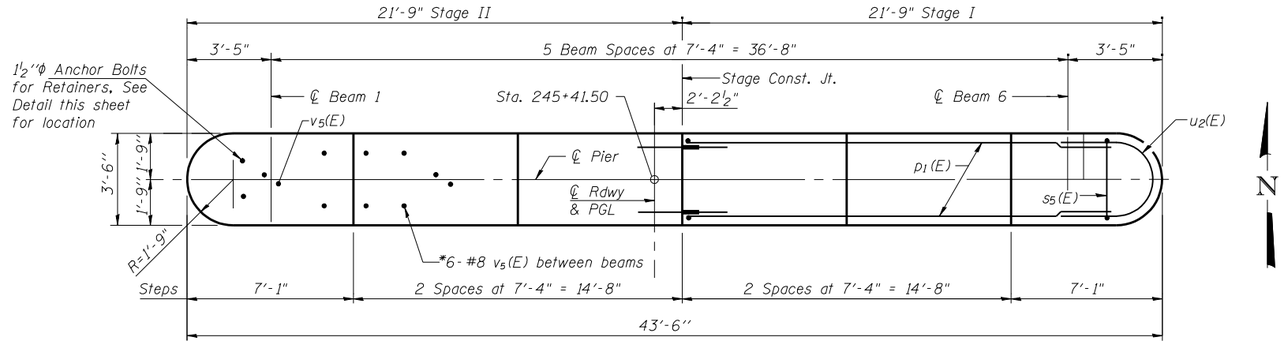

*See sheet 15 of 36 for location of v5(E) bars.

TOP PLAN

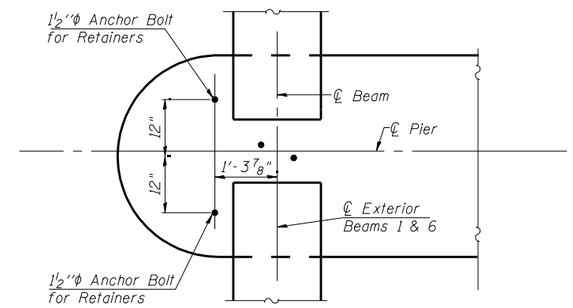

ANCHOR BOLT LOCATION DETAIL

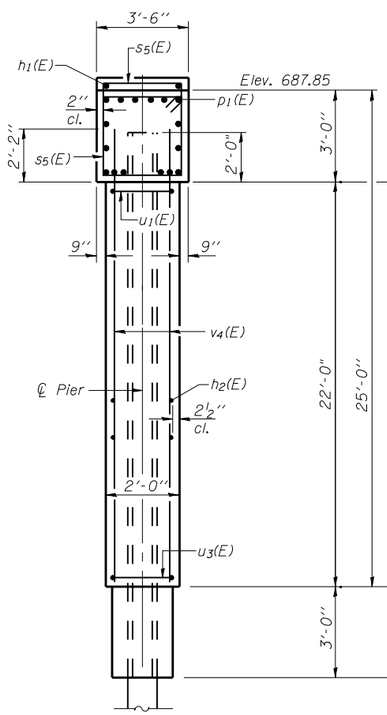

END VIEW

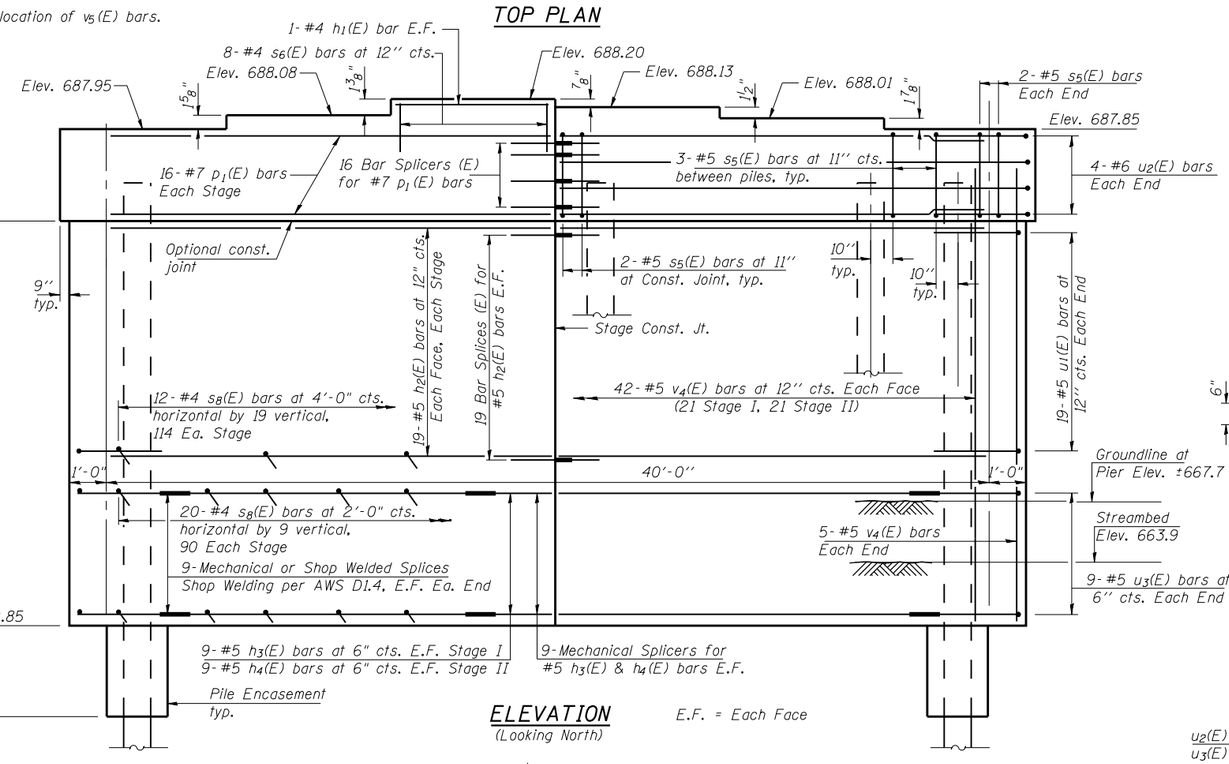

ELEVATION
(Looking North)

E.F. = Each Face

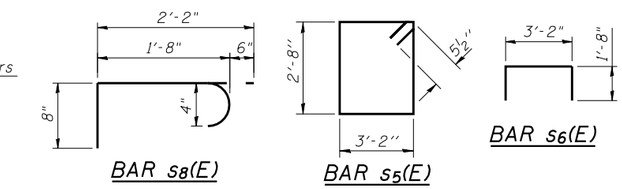

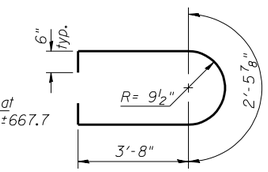

BAR u1(E)

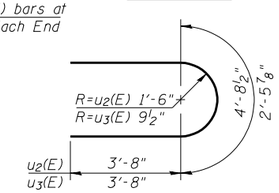

BARS u2(E) & u3(E)

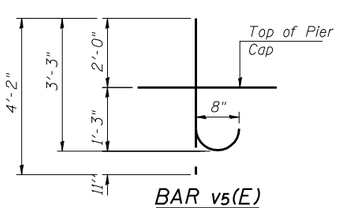

BAR v5(E)

BILL OF MATERIAL

Bar	No.	Size	Length	Shape
h1(E)	2	#4	7'-0''	
h2(E)	76	#5	19'-10''	
h3(E)	18	#5	17'-10''	
h4(E)	18	#5	14'-10''	
p1(E)	32	#7	19'-10''	
s5(E)	38	#5	12'-7''	
s6(E)	8	#4	6'-6''	
s8(E)	408	#4	2'-10''	
u1(E)	32	#5	10'-10''	
u2(E)	8	#6	12'-1''	
u3(E)	18	#5	9'-10''	
v4(E)	94	#5	24'-3''	
v5(E)	42	#8	4'-2''	
Structure Excavation			Cu. Yd.	50
Concrete Structures			Cu. Yd.	85.4
Reinforcement Bars, Epoxy Coated			Pound	8400
Furnishing Steel Piles HP 14 x 73			Foot	847
Driving Piles			Foot	847
Test Pile Steel HP 14 x 73			Each	1
Underwater Structure Excavation Protection, Location 1			Each	1
Concrete Encasement			Cu. Yd.	6.5
Bar Splicers			Each	54
Mechanical Splice			Each	54

PILE DATA

Type: Steel HP 14x73
Nominal Required Bearing: 578 kip
Factored Resistance Available: 285 kip
Est. Length: 77 ft.
No. Production Piles: 11
No. Test Piles: 1

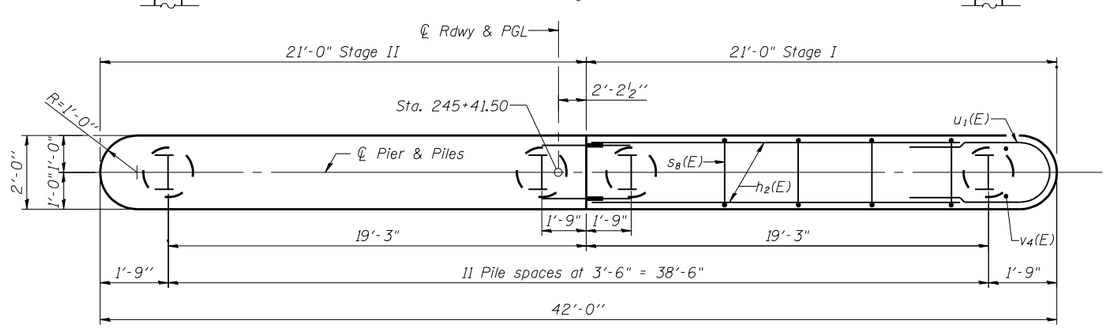

PLAN

NOTE

If a portion of the pier wall or concrete encasement is under water, reinforcement may be placed underwater into forms. Concrete shall be tremied according to Article 503.08 of the Standard Specifications to an elevation of 1'-0'' above the water line at the time of construction.

PIER 1
STRUCTURE NO. 010-0287

Coombe-Bloxdorf P.C.
-CIVIL ENGINEERS-
-STRUCTURAL ENGINEERS-
-LAND SURVEYORS-
Design Firm License No. 184-002703

PROJECT NO.	06027-3
SCALE	
DATE	9/24/09
DESIGN BY	RM/MCB
DRAWN BY	TFG
CHECKED BY	MCB

SHEET NO. 29
36 SHEETS

F.A.P. RTE.	SECTION	COUNTY	TOTAL SHEETS	SHEET NO.
326	(137BR)BR	CHAMPAIGN	75	49
	SN 010-0287	CONTRACT NO. 70428		
FED. ROAD DIST. NO. 7	ILLINOIS	FED. AID PROJECT		

PLOT DATE = 9/24/2009
FILE NAME = p:\06027\Bridge\Sht-29-Pier1.dgn
PLOT SCALE = 62.058794 ' / IN.
USER NAME = JNL.