DETAILS OF MAILBOX TURNOUTS

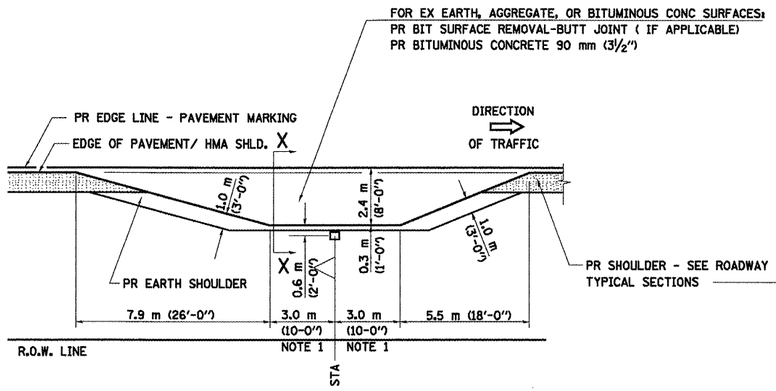

PLAN - MAILBOX TURNOUTS

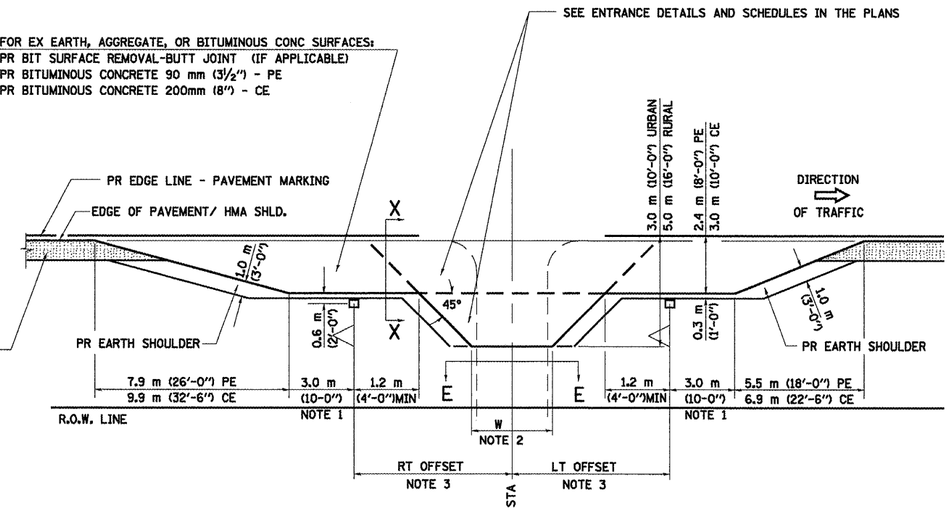

PLAN - COMBINED MAILBOX TURNOUT WITH TRAILING OR LEADING ENTRANCE

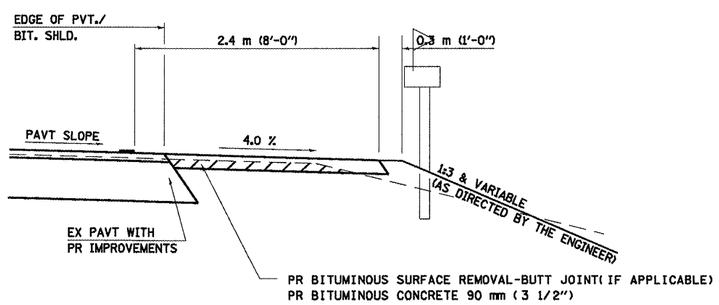

SECTION X-X THRU MAILBOX TURNOUT
ALSO APPLIES TO MAILBOX TURNOUTS COMBINED WITH EX EARTH, AGGREGATE, OR BITUMINOUS PE & FE

(DETAIL APPLIES WHEN M.B. TURNOUT DOES NOT EXIST.
IF EXISTING, TREAT SAME AS ENTRANCE.)

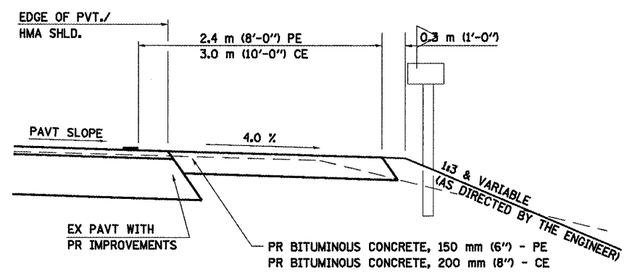

SECTION X-X THRU MAILBOX TURNOUT
COMBINED WITH EX BITUMINOUS CONC & PC CONC PE & CE

(DETAIL APPLIES WHEN M.B. TURNOUT DOES NOT EXIST.
IF EXISTING, TREAT SAME AS ENTRANCE.)

NOTE 1 IF MORE THAN ONE MAILBOX IS PRESENT, DIMENSION FROM CENTER OF END MAILBOX.

NOTE 2 FOR ENTRANCE LAYOUT DIMENSIONS AND SECTIONS A-A & E-E REFER TO THE SCHEDULES IN THE PLANS.

NOTE 3 BOTH LT OR RT OFFSETS FOR MAILBOX SHOWN USE OFFSET DIMENSION PER SCHEDULE AND REFER TO LAYOUT SHOWN ON THE PLAN.

ALL DIMENSIONS ARE IN MILLIMETERS (INCHES)
UNLESS OTHERWISE SHOWN.

FILE NAME = S:\PROJ ENGR 1 (Negangard)\Dust Squad\FAP 662 (IL 4) Henderson pdfs\CADD Sheets\D6727MBTURNOUTENT.dgn	USER NAME = madonsevj	DESIGNED -		REVISED - 2/19/03 JCN	Allen Henderson & Associates, Inc. Civil and Structural Engineers Springfield, IL. 62703 Phone: (217)544-8033 IL. Design Firm No. 184-001907	DIST. 6 DETAILS FOR RURAL/URBAN ENT., MAILBOX TURNOUT & SIDEROADS W/O CONC. GUTTER (3P-PROJ.)			F.A.P. RTE.	SECTION	COUNTY	TOTAL SHEETS	SHEET NO.
ENT PPP.DGN		DRAWN - CADD		REVISED - 4/01/04 JCN					662	D(W-3,RS-11,CR)	MACOUPIN	102	62
	PLOT SCALE = 40.0000 ' / IN.	CHECKED - JCN		REVISED -							CONTRACT NO. 72765		
	PLOT DATE = Aug-17-2009 04:07:06PM	DATE - FEBRUARY 23, 1999		REVISED -		SCALE: NONE	SHEET NO. 5 OF 6 SHEETS	STA. TO STA.	FED. ROAD DIST. NO.	ILLINOIS	FED. AID PROJECT		