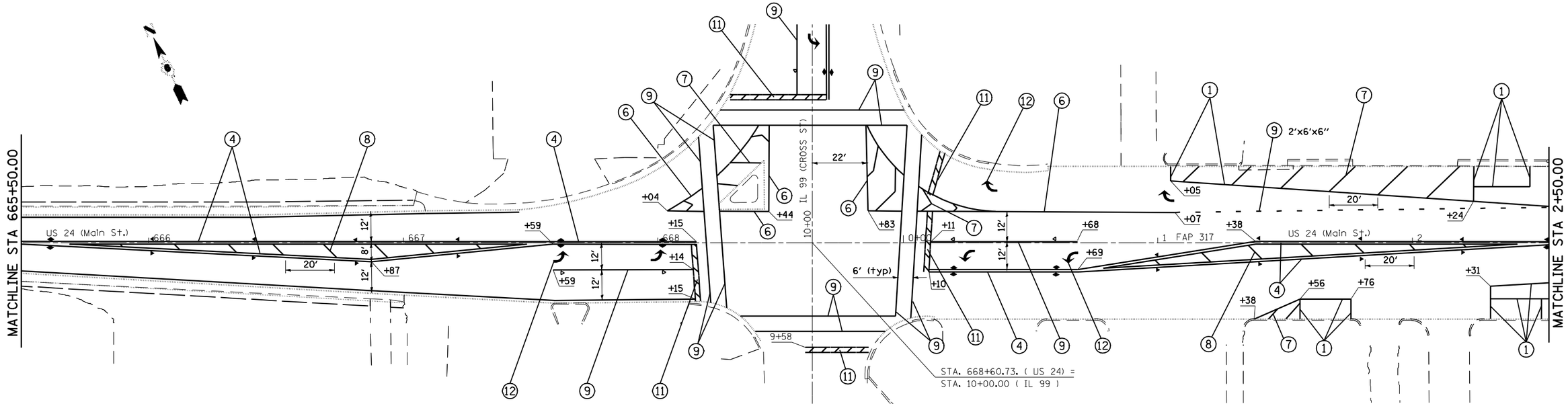

RAISED REFLECTIVE PAVEMENT MARKER
◄ - ONE-WAY AMBER MARKER
▷ - ONE-WAY CRYSTAL MARKER
◆ - TWO-WAY MARKER

PAVEMENT MARKING LEGEND		
1	THERMOPLASTIC PAVEMENT MARKING - LINE 5"	(SOLID WHITE LINE)
2	THERMOPLASTIC PAVEMENT MARKING - LINE 5"	(YELLOW SKIP DASH)
3	THERMOPLASTIC PAVEMENT MARKING - LINE 5"	(SOLID YELLOW LINE)
4	THERMOPLASTIC PAVEMENT MARKING - LINE 5"	(DOUBLE YELLOW)
5	THERMOPLASTIC PAVEMENT MARKING - LINE 6"	(WHITE SKIP DASH)
6	THERMOPLASTIC PAVEMENT MARKING - LINE 8"	(SOLID WHITE LINE)

PAVEMENT MARKING LEGEND		
7	THERMOPLASTIC PAVEMENT MARKING - LINE 12"	(SOLID WHITE LINE)
8	THERMOPLASTIC PAVEMENT MARKING - LINE 12"	(SOLID YELLOW LINE)
9	PREFORMED PLASTIC PAVEMENT MARKING, TYPE B - INLAID - LINE 6"	(SOLID WHITE LINE)
10	PREFORMED PLASTIC PAVEMENT MARKING, TYPE B - INLAID - LINE 12"	(SOLID WHITE LINE)
11	PREFORMED PLASTIC PAVEMENT MARKING, TYPE B - INLAID - LINE 24"	(WHITE STOP BARS)
12	PREFORMED PLASTIC PAVEMENT MARKING, TYPE B - INLAID - LETTERS AND SYMBOLS	(WHITE ARROWS)

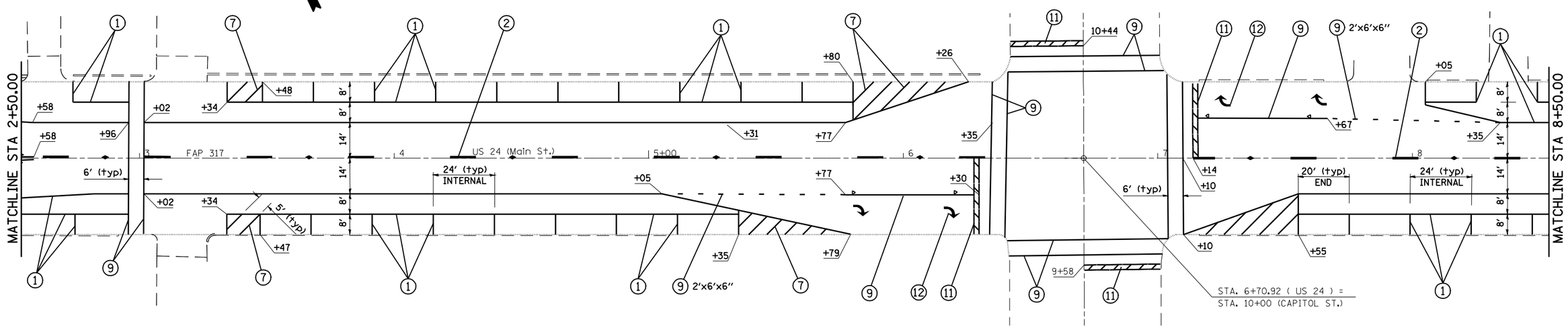

FILE NAME = c:\pw_work\PWIDOT\LAUGHLINRL\dms20175\d72b60-sht-plan29pm.dgn	USER NAME = laughlinrl	DESIGNED -	REVISED -
		DRAWN -	REVISED -
	PLOT SCALE = 40.0000 ' / IN.	CHECKED -	REVISED -
	PLOT DATE = Oct-07-2009 10:17:18AM	DATE -	REVISED -

STATE OF ILLINOIS
DEPARTMENT OF TRANSPORTATION

US 24 3P PAVEMENT MARKING PLAN SHEET

SCALE: 1" = 20' | SHEET NO. 4 OF 5 SHEETS | STA. 665+50 TO STA. 8+50

F.A.P RTE.	SECTION	COUNTY	TOTAL SHEETS	SHEET NO.
•	7(W-1,RS-8,N); 9RS-4	BROWN	177	90
		CONTRACT NO. 72B60		
FED. ROAD DIST. NO.	ILLINOIS	FED. AID PROJECT		

• FAP 317 (US 24) & 550 (IL 99)