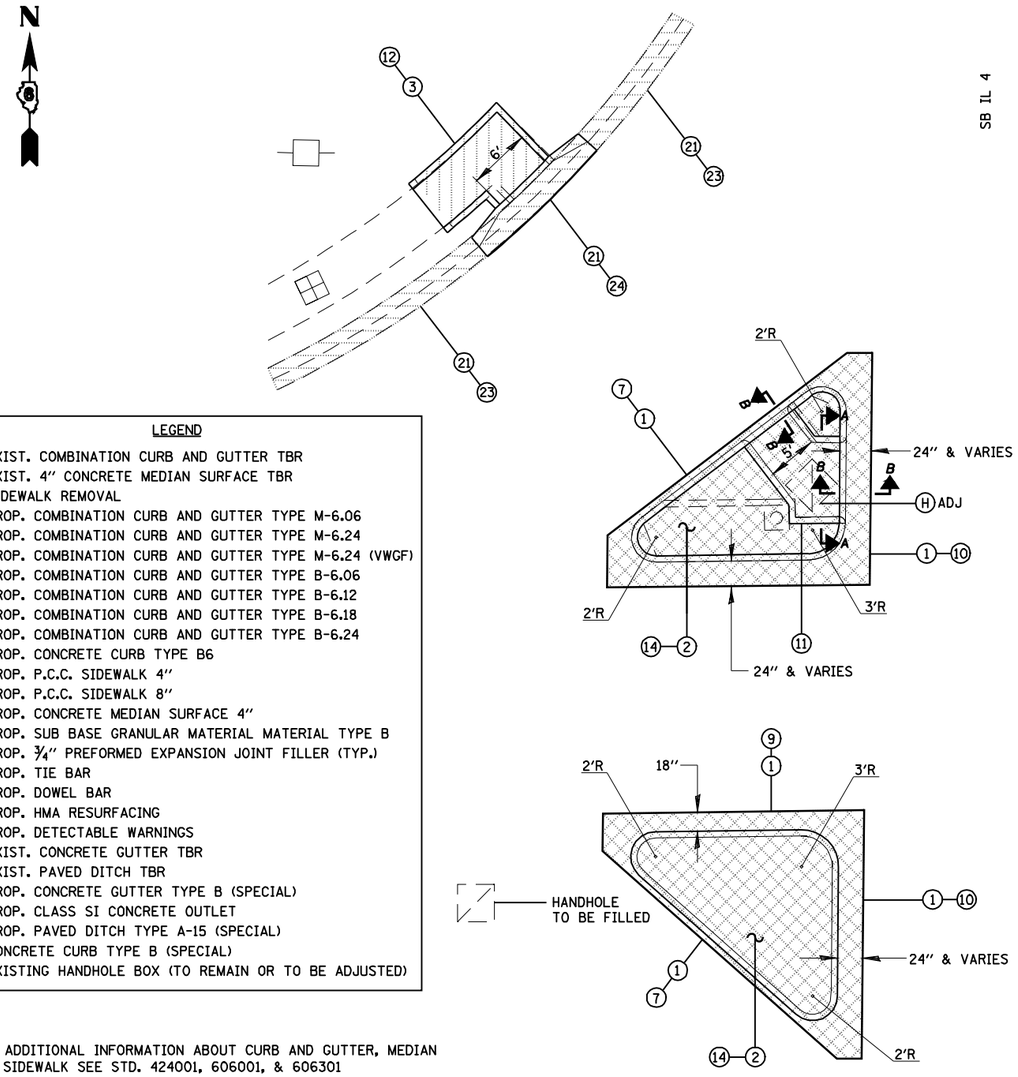

LAWRENCE AVE SIDEWALK PLAN

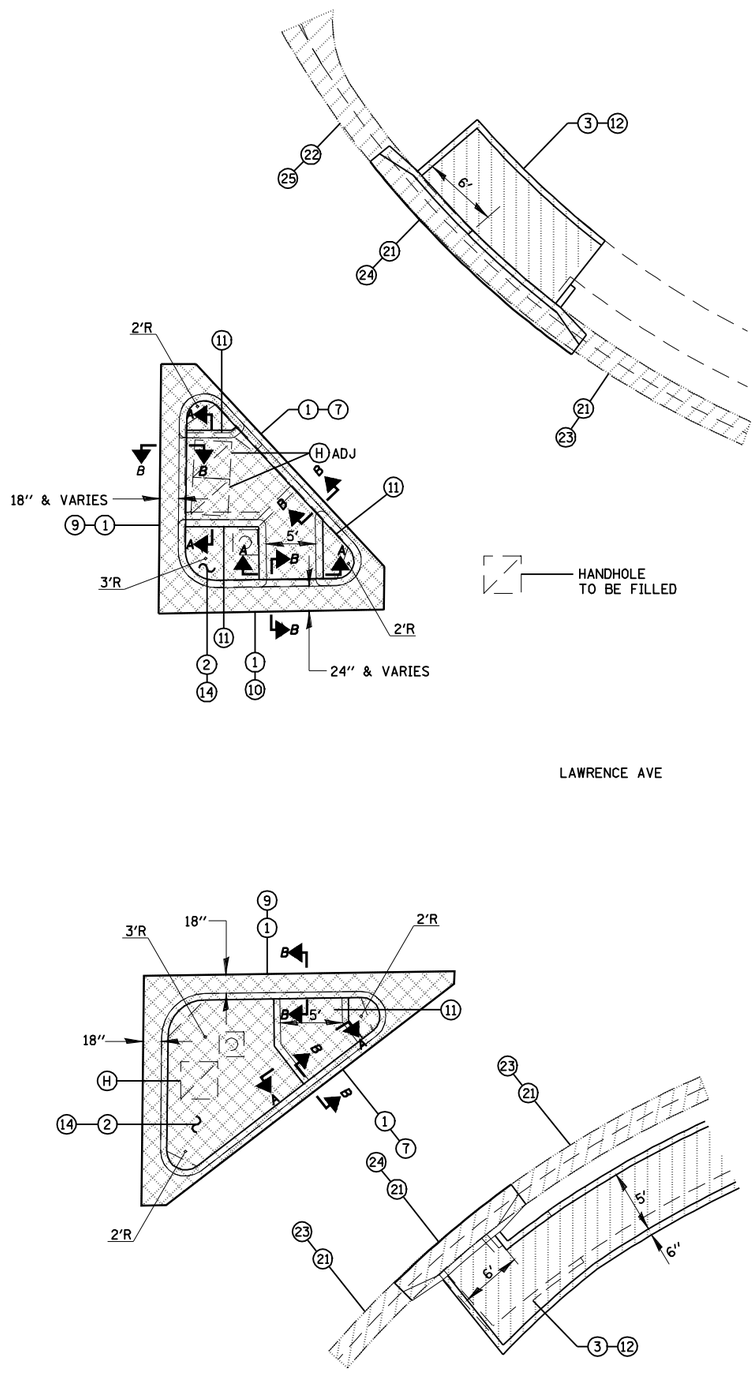

LEGEND

1. EXIST. COMBINATION CURB AND GUTTER TBR
2. EXIST. 4'' CONCRETE MEDIAN SURFACE TBR
3. SIDEWALK REMOVAL
4. PROP. COMBINATION CURB AND GUTTER TYPE M-6.06
5. PROP. COMBINATION CURB AND GUTTER TYPE M-6.24
6. PROP. COMBINATION CURB AND GUTTER TYPE M-6.24 (VWGF)
7. PROP. COMBINATION CURB AND GUTTER TYPE B-6.06
8. PROP. COMBINATION CURB AND GUTTER TYPE B-6.12
9. PROP. COMBINATION CURB AND GUTTER TYPE B-6.18
10. PROP. COMBINATION CURB AND GUTTER TYPE B-6.24
11. PROP. CONCRETE CURB TYPE B6
12. PROP. P.C.C. SIDEWALK 4''
13. PROP. P.C.C. SIDEWALK 8''
14. PROP. CONCRETE MEDIAN SURFACE 4''
15. PROP. SUB BASE GRANULAR MATERIAL MATERIAL TYPE B
16. PROP. ¾'' PREFORMED EXPANSION JOINT FILLER (TYP.)
17. PROP. TIE BAR
18. PROP. DOWEL BAR
19. PROP. HMA RESURFACING
20. PROP. DETECTABLE WARNINGS
21. EXIST. CONCRETE GUTTER TBR
22. EXIST. PAVED DITCH TBR
23. PROP. CONCRETE GUTTER TYPE B (SPECIAL)
24. PROP. CLASS SI CONCRETE OUTLET
25. PROP. PAVED DITCH TYPE A-15 (SPECIAL)
26. CONCRETE CURB TYPE B (SPECIAL)

(H) EXISTING HANDHOLE BOX (TO REMAIN OR TO BE ADJUSTED)

NOTE:

1. FOR ADDITIONAL INFORMATION ABOUT CURB AND GUTTER, MEDIAN AND SIDEWALK SEE STD. 424001, 606001, & 606301

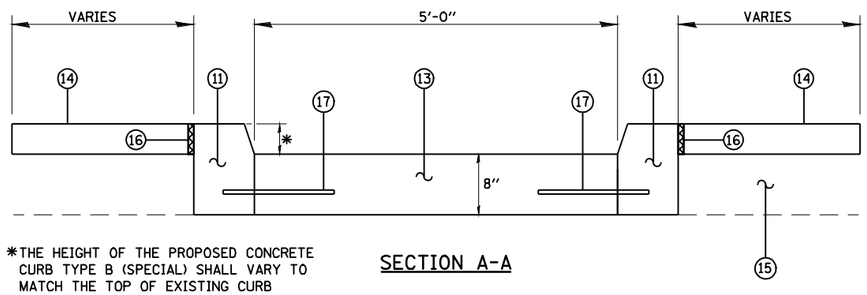

*THE HEIGHT OF THE PROPOSED CONCRETE CURB TYPE B (SPECIAL) SHALL VARY TO MATCH THE TOP OF EXISTING CURB

SECTION A-A

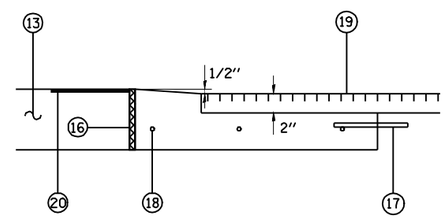

SECTION B-B

CEC Cummins Engineering Corporation — Civil and Structural Engineering	JOB = 2200.4	DESIGNED - NAK	REVISED -	STATE OF ILLINOIS DEPARTMENT OF TRANSPORTATION	CROSSWALK & ISLAND DETAILS	F.A.S. RTE. 662	SECTION (2-1-2, 2-2) RS, TS-6	COUNTY SANGAMON	TOTAL SHEETS 244	SHEET NO. 147
	FILE NAME = D672B99-sht-details4.dgn	DRAWN - AJH	REVISED -					CONTRACT NO. 72B99		
	PLOT SCALE = 12.1921 ' / IN.	CHECKED - NAK	REVISED -		SCALE: SHEET NO. OF SHEETS STA. TO STA.	FED. ROAD DIST. NO.	ILLINOIS	FED. AID PROJECT		
	PLOT DATE = Oct-29-2009 11:54:28AM	DATE - 10/12/2009	REVISED -							