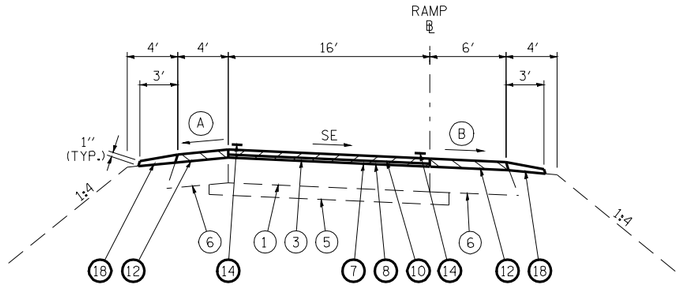

RAMP A STA. 106+63.30 TO STA. 111+67.02 SE = 8.0% RT
RAMP A STA. 114+07.92 TO STA. 118+27.05 SE = 8.0% LT
RAMP B STA. 202+38.12 TO STA. 205+66.17 SE = 8.0% LT
RAMP B STA. 205+66.17 TO STA. 221+98.24 SE = NC
RAMP C STA. 310+44.54 TO STA. 322+42.61 SE = 6.0% RT
RAMP D STA. 402+82.99 TO STA. 406+25.61 SE = 8.0% LT
RAMP D STA. 408+67.49 TO STA. 415+61.14 SE = 8.0% RT

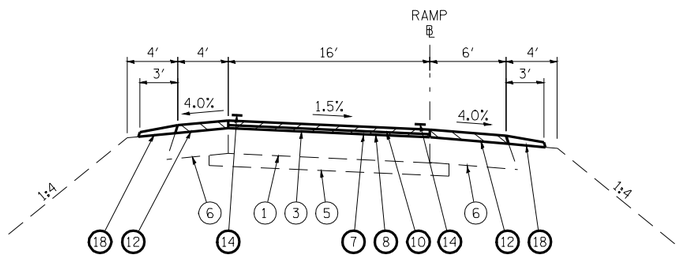

RAMP A STA. 111+67.02 TO STA. 114+07.92
RAMP A STA. 118+27.05 TO STA. 120+48.88
RAMP B STA. 200+23.00 TO STA. 202+38.12
RAMP B STA. 221+98.24 TO STA. 224+16.57
RAMP C STA. 322+42.61 TO STA. 325+30.16
RAMP D STA. 400+21.73 TO STA. 402+82.99
RAMP D STA. 406+25.61 TO STA. 408+67.49

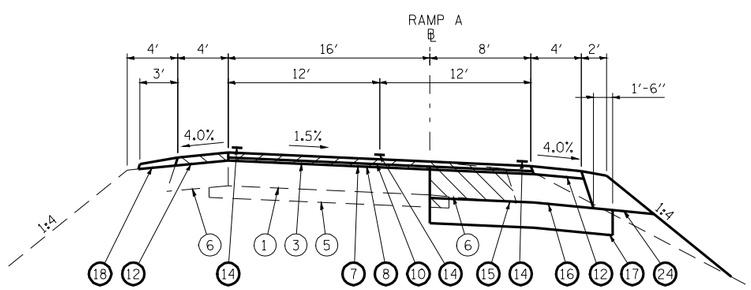

RAMP A STA. 117+50.00 TO STA. 120+48.88

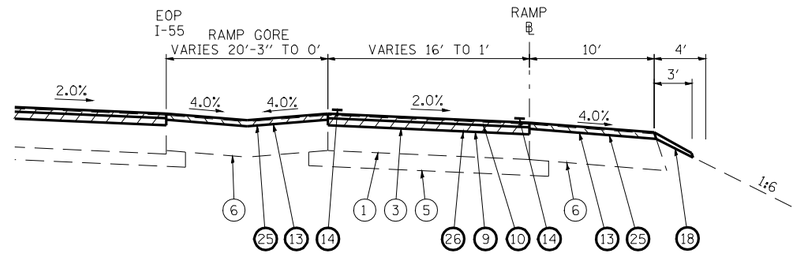

RAMP A STA. 100+00.00 TO STA. 106+63.30 (GORE ENDS STA. 103+00.00)
RAMP B STA. 224+64.90 TO STA. 237+47.19 (GORE ENDS STA. 228+97.19)
RAMP C STA. 300+00.00 TO STA. 310+44.54 (GORE ENDS STA. 303+00.00)
RAMP D STA. 414+53.82 TO STA. 426+11.77 (GORE ENDS STA. 417+61.77)

(A) WHEN THE SUPERELEVATION RATE OF THE PAVEMENT IS BETWEEN 0% AND 4%, THE SHOULDER SHALL BE SLOPED AT 4%. WHEN THE SUPERELEVATION RATE OF THE PAVEMENT EXCEEDS 4%, THE SHOULDER SHALL BE SLOPED SO THAT THE ALGEBRAIC DIFFERENCE BETWEEN PAVEMENT AND SHOULDER WILL NOT BE GREATER THAN 8%.

(B) SLOPE SHALL BE THE SAME AS THE SUPERELEVATION RATE, BUT NOT LESS THAN 4%.

LEGEND

1. EXISTING CRCP PAVEMENT 8″
2. EXISTING JRCP PAVEMENT 8″
3. EXISTING BITUMINOUS CONCRETE 2½″
4. EXISTING LONGITUDINAL JOINT
5. EXISTING STABILIZED SUBBASE, 4″
6. EXISTING BITUMINOUS SHOULDER, 10½″
7. PROPOSED HOT-MIX ASPHALT SURFACE REMOVAL, 2½″
8. POLYMERIZED HOT-MIX ASPHALT BINDER COURSE, IL-19.0, N105, 1″
9. POLYMERIZED HOT-MIX ASPHALT BINDER COURSE, IL-19.0, N90, 2¼″
10. PROPOSED POLYMERIZED HOT-MIX ASPHALT SURFACE COURSE, MIX "D", N105, 1½″
11. PROPOSED POLYMERIZED HOT-MIX ASPHALT SURFACE COURSE, MIX "D", N90, 1½″
12. PROPOSED HOT-MIX ASPHALT SHOULDERS, 2½″
13. PROPOSED HOT-MIX ASPHALT SHOULDERS, 2″
14. PROPOSED PAVEMENT MARKING
15. PROPOSED PAVED SHOULDER REMOVAL
16. PROPOSED HOT-MIX ASPHALT BASE COURSE WIDENING, 10″
17. PROPOSED SUBBASE GRANULAR MATERIAL, TYPE A, 8″
18. PROPOSED AGGREGATE SHOULDERS, TYPE B
19. PROPOSED COMBINATION CURB AND GUTTER REMOVAL
20. PROPOSED MEDIAN SURFACE REMOVAL
21. PROPOSED COMBINATION CONCRETE CURB AND GUTTER, TYPE M-6.06 (ABUTTING EXISTING PAVEMENT)
22. PROPOSED CONCRETE MEDIAN SURFACE, 4″
23. PROPOSED POROUS GRANULAR BACKFILL (CA 7), 4″
24. PROPOSED AGGREGATE SHOULDERS, TYPE A, 12½″
25. PROPOSED HOT-MIX ASPHALT SURFACE REMOVAL, 1½″
26. PROPOSED HOT-MIX ASPHALT SURFACE REMOVAL, 3¼″
27. PROPOSED HOT MIX ASPHALT SURFACE REMOVAL, ¾″

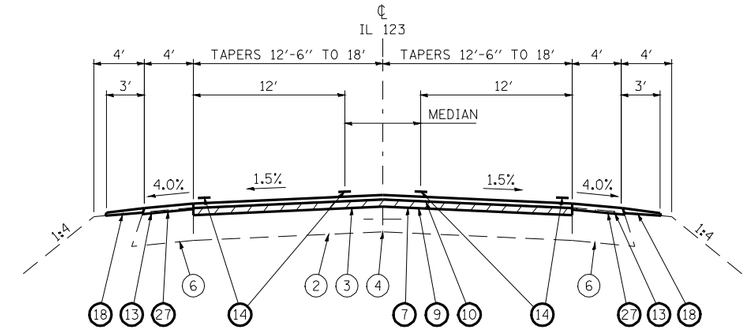

STA. 18+98.00 TO STA. 22+00.00

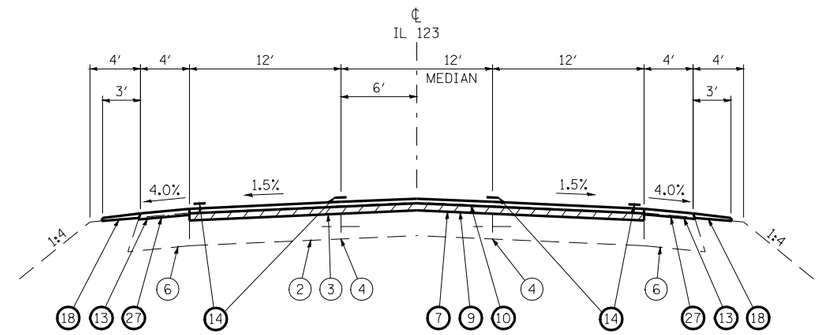

STA. 22+00.00 TO STA. 31+58.10

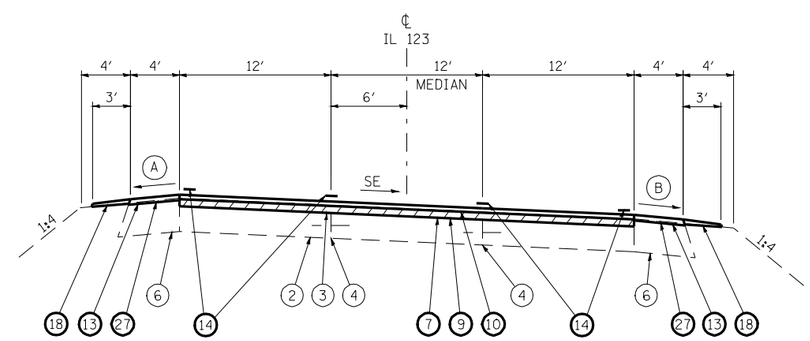

STA. 31+58.10 TO STA. 33+17.40

NOTES

1. MILL TO BARE CONCRETE
2. SEE CURVE DATA ON PLAN SHEETS FOR SE RATES AND LOCATIONS. SE TRANSITIONS SHOWN ABOVE ARE FOR CURVES GOING TO THE RIGHT, AND WILL HAVE TO BE ADJUSTED APPROPRIATELY FOR THE CURVES GOING TO THE LEFT.
3. NO PROPOSED RUMBLE STRIPS WILL BE PLACED ON RAMP SHOULDERS OR MAINLINE IL 123 AT THE IL 123 INTERCHANGE.
4. FOR LOCATIONS AND DIMENSIONS OF AUXILIARY TURN LANES, SEE PLAN SHEETS.