Massie & Massie Associates
1210 S. 5th Street, Springfield, IL 62703 217-544-3210
421 West Main Street, Decatur, IL 62522 217-424-0792

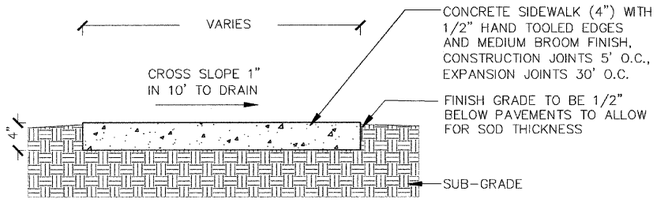

L 1-1 **CONCRETE SIDEWALK**
NOT TO SCALE

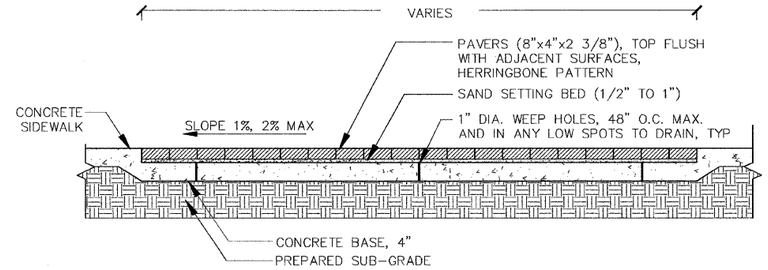

L 1-2 **UNIT PAVERS ON SAND**
NOT TO SCALE

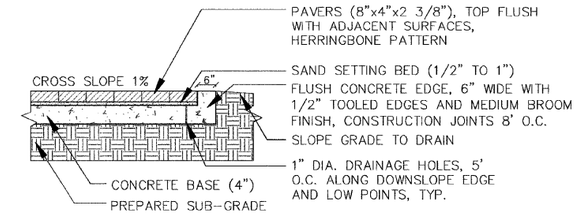

L 1-3 **FLUSH CONCRETE EDGE AND UNIT PAVERS**
NOT TO SCALE

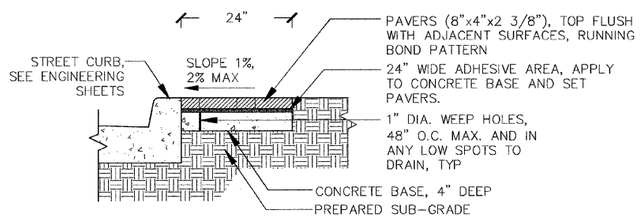

L 1-4 **UNIT PAVERS ON ADHESIVE**
NOT TO SCALE

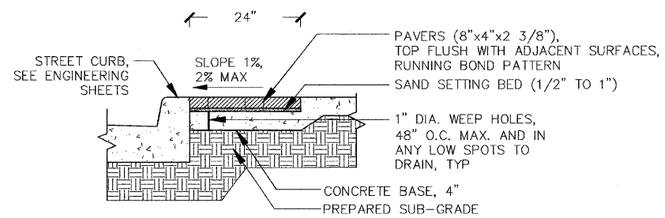

L 1-5 **UNIT PAVERS ADJACENT TO SIDEWALK**
NOT TO SCALE

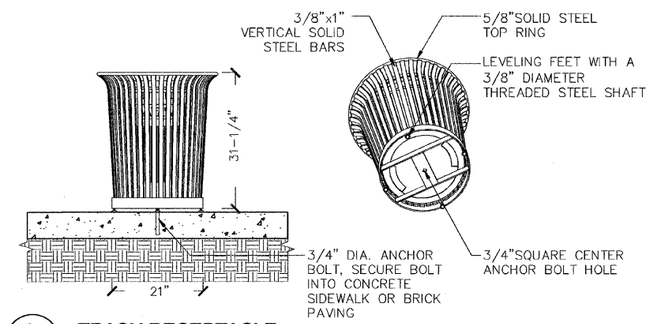

L 1-6 **TRASH RECEPTACLE**
NOT TO SCALE

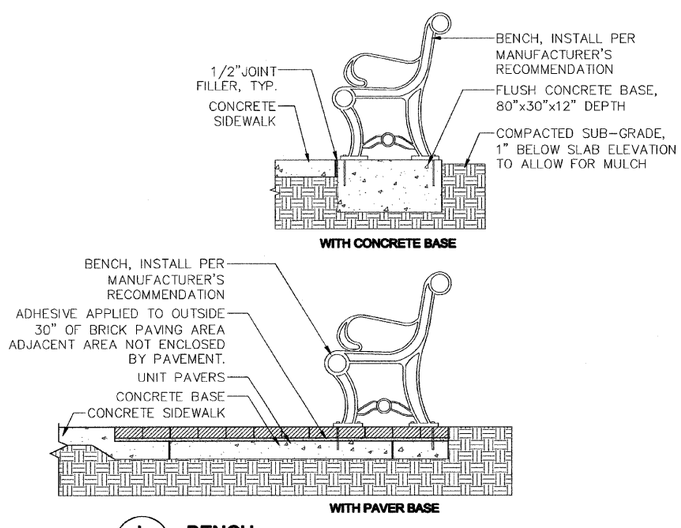

L 1-7 **BENCH**
NOT TO SCALE

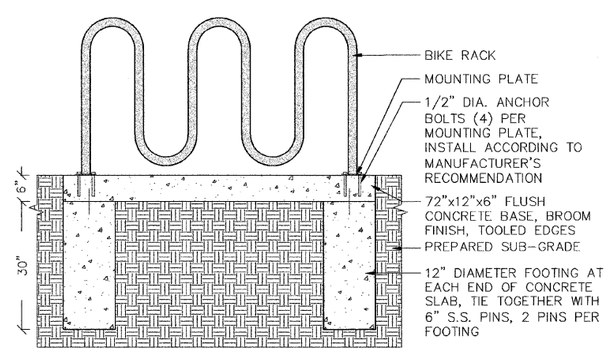

L 1-8 **BIKE RACK**
NOT TO SCALE

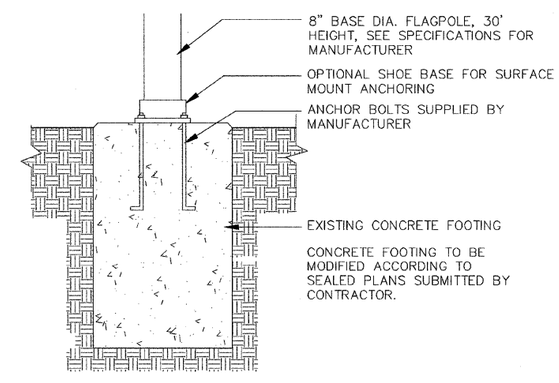

L 1-9 **FLAG POLE BASE**
NOT TO SCALE

FILE NAME = $FILEL$	USER NAME = $USER$	DESIGNED — SMM	REVISED —
		DRAWN — NFB	REVISED —
	PLOT SCALE = N/A	CHECKED — SMM	REVISED —
	PLOT DATE = 11-25-08	DATE — 11-4-08	REVISED —

STATE OF ILLINOIS
DEPARTMENT OF TRANSPORTATION

CITY OF JACKSONVILLE DOWNTOWN PLAZA STREETS RECONSTRUCTION
PAVEMENT AND SITE FURNISHING DETAILS

SCALE: N/A | SHEET NO. 51 OF 74 SHEETS | STA. _____ TO STA. _____

F.A. RTE.	SECTION	COUNTY	TOTAL SHEETS	SHEET NO.
N/A	05-00121-00-PV	MORGAN	74	51

CONTRACT NO. 93504
FED. ROAD DIST. NO. _ | ILLINOIS | FED. AID PROJECT