ROUTE NO.	SECTION	COUNTY	TOTAL SHEETS	SHEET NO.
FAU 7432	*	MACON	47	31
FED.ROAD DIST.NO.		ILLINOIS	PROJECT	

Sheet No. 21 of 26 Sheets

• 08-00602-00-BR

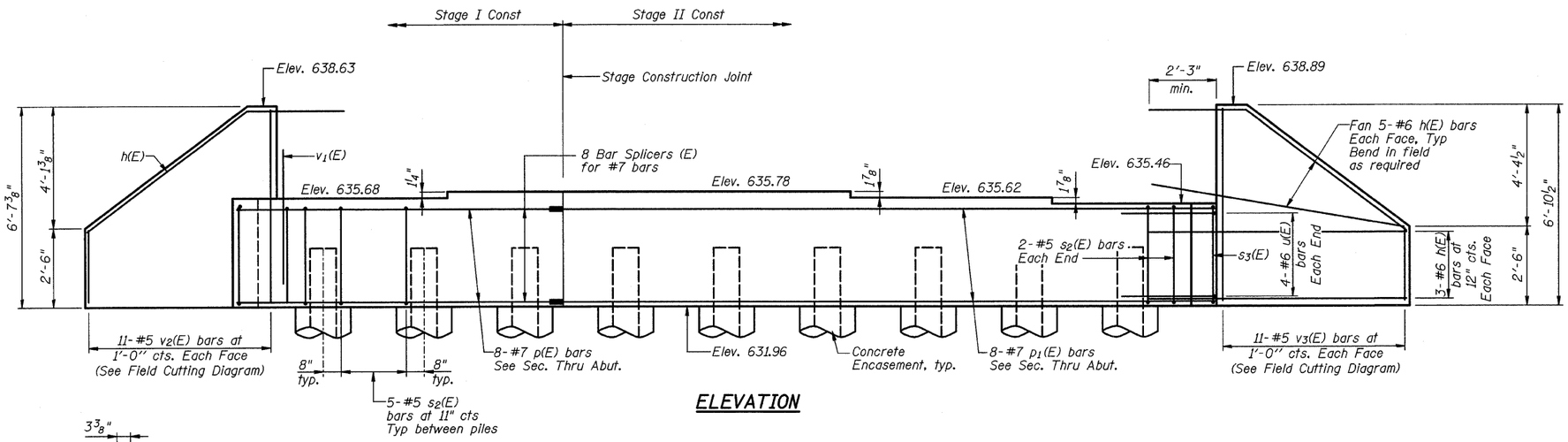

ELEVATION

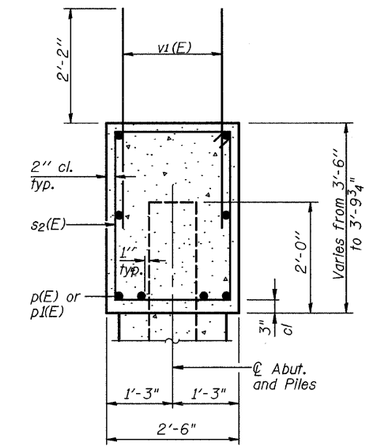

SEC. THRU ABUT.

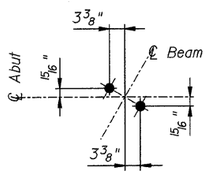

A.B. LAYOUT DETAIL

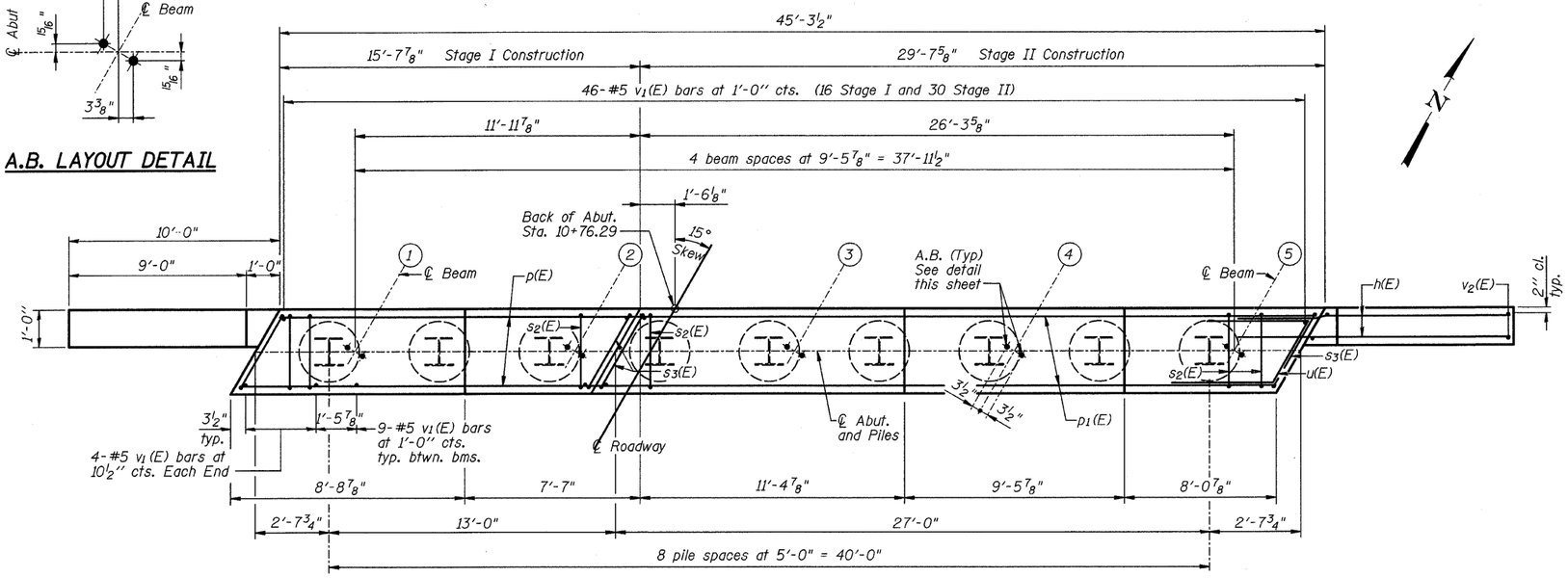

PLAN

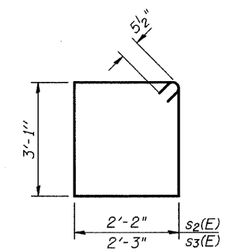

BARS s2(E) & s3(E)

BILL OF MATERIAL

Bar	No.	Size	Length	Shape
h(E)	32	#6	13'-2"	
p(E)	8	#7	15'-3"	
p1(E)	8	#7	29'-3"	
s2(E)	44	#5	11'-5"	
s3(E)	4	#5	11'-7"	
u(E)	8	#6	9'-3"	
v1(E)	92	#5	4'-4"	
v2(E)	11	#5	8'-3"	
v3(E)	11	#5	8'-7"	
Structure Excavation			Cu. Yd.	142
Concrete Structures			Cu. Yd.	17.1
Reinforcement Bars, Epoxy Coated			Pound	2650
Furnishing Steel Piles HP12x53			Foot	360
Driving Piles			Foot	360
Concrete Encasement			Cu. Yd.	3.2

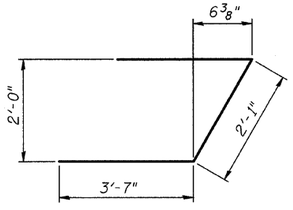

BAR u(E)

PILE DATA

Type: Steel HP12x53
Nominal Required Bearing: 231 kips
Factored Resistance Available: 77 kips
Est. Length: 40'
No. Production Piles: 9

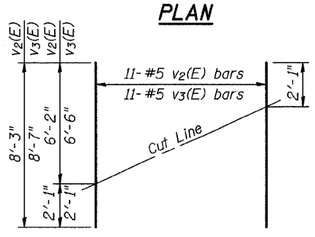

FIELD CUTTING DIAGRAM

Order v2(E) & v3(E) full length. Cut as shown and use remainder of bars in opposite face.

Note:
Pour steps monolithically with cap.
Reinforcement Bars designated (E) shall be epoxy coated.
For details of Bar Splicers, see sheet 25 of 26.
For details of piles and Concrete Encasement, see sheet 24 of 26.
All edges shall have standard ¾" chamfer.
Space reinforcement in cap to miss anchor bolts.

MACARTHUR ROAD (FAU 7432) OVER STEVENS CREEK

NORTH ABUTMENT DETAILS

REVISIONS		
No.	DATE	INITIALS
1		
2		
3		
4		
5		
6		
7		
8		
9		
10		

SECTION 08-00602-00-BR MACARTHUR ROAD (FAU 7432)
SN 058-6025
STA 10+00.00 MACON COUNTY

HOMER L. CHASTAIN & ASSOCIATES, LLP
CONSULTING ENGINEERS
184-001397
DECATUR (217) 422-8544 CHICAGO (773) 714-0050
ROCKFORD (815) 489-0050

DRAWN BY	DATE R KING 07/09
CHECKED BY	DATE JMB 07/09
BOOK NUMBER	486
PROJECT No.	5307
SHEET No.	

AI-R 5-16-08