ROUTE NO.	SECTION	COUNTY	TOTAL SHEETS	SHEET NO.
F.A.S. 806	18-00122 -00-BR	LAWRENCE	29	1
FED. ROAD DIST. NO.		ILLINOIS	CONTRACT NO. 95886	

INDEX OF SHEETS

01-15-2021 LETTING ITEM 138

SHEET NO.	DESCRIPTION
1.	COVER SHEET
2.	SUMMARY OF QUANTITIES AND GENERAL NOTES
3.	SCHEDULE OF QUANTITIES
4.	TYPICAL CROSS SECTIONS
5.	PLAN AND PROFILE
6.	GUARDRAIL AND SHOULDER LAYOUT
7-14.	BRIDGE PLANS
15.	BORINGS
16-29.	STATION CROSS SECTIONS

HIGHWAY STANDARDS:

000001-08	STANDARD SYMBOLS, ABBREVIATIONS, AND PATTERNS
515001-04	NAME PLATE FOR BRIDGES
630001-12	STEEL PLATE BEAM GUARDRAIL
630301-09	SHOULDER WIDENING FOR TYPE 1, (SPECIAL) GUARDRAIL TERMINALS
631032-09	TRAFFIC BARRIER TERMINAL, TYPE 6A
701901-08	TRAFFIC CONTROL DEVICES
725001-01	OBJECT AND TERMINAL MARKERS
782006-01	GUARDRAIL AND BARRIER WALL REFLECTOR MOUNTING DETAILS
BLR 21-9	TYPICAL APPLICATION OF TRAFFIC CONTROL DEVICES FOR CONCSTRUCTION ON RURAL LOCAL HIGHWAYS

STATE OF ILLINOIS
DEPARTMENT OF TRANSPORTATION

PLANS FOR PROPOSED
SURFACE TRANSPORTATION PROGRAM – BRIDGE

PROJECT VFL2(092)
SECTION 18–00122–00–BR
LAWRENCE COUNTY
F.A.S. 806 / C.H. 8
PROPOSED STRUCTURE NO. 051–3310
C–97–059–19

LOCATION OF SECTION INDICATED THUS:–

UTILITIES

FRONTIER COMMUNICATIONS
307 N. JEFFERSON STREET
ROBINSON, IL 62454

NORRIS ELECTRIC CO-OP
8543 NORTH STATE HIGHWAY 130
NEWTON, IL 62448

IMPROVEMENT ENDS
STATION 12+25

STA. 10+00
PRECAST PRESTRESSED CONCRETE DECK BEAM BRIDGE.
SINGLE SPAN @ 86'-0"
30'-0" RDWY.; SKEW = 0°
EXISTING STRUCTURE NO. 051-3124
PROPOSED STRUCTURE NO. 051-3310

IMPROVEMENT BEGINS
STATION 7+75

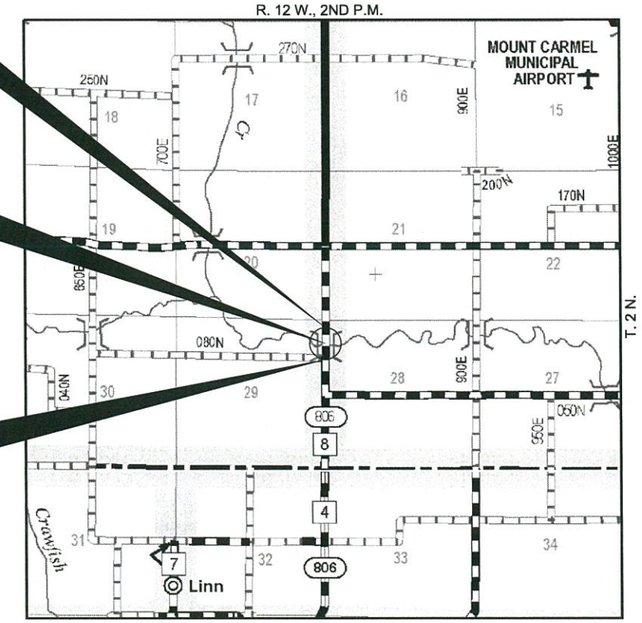

N

LOCATION MAP

APPROXIMATE SCALE: 0 ½ MILE

NET LENGTH OF SECTION = 450 FEET = 0.085 MILES

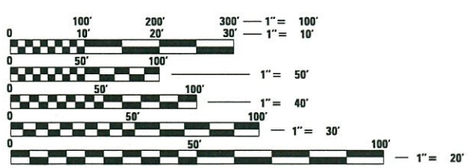

FULL SIZE PLANS HAVE BEEN PREPARED USING STANDARD ENGINEERING SCALES. REDUCED SIZED PLANS WILL NOT CONFORM TO STANDARD SCALES. IN MAKING MEASUREMENTS ON REDUCED PLANS, THE ABOVE SCALES MAY BE USED.

FUNCTIONAL CLASSIFICATION:	MAJOR COLLECTOR
DESIGN SPEED:	50 MPH
DESIGN TRAFFIC:	700 ADT

WARNING

CALL JULIE TOLL FREE 1-800-892-0123

CALL 811 BEFORE YOU DIG

DIG NO: A0501048

ILLINOIS DEPARTMENT OF TRANSPORTATION

APPROVED October 26, 2020
Adam McHose
COUNTY ENGINEER

PASSED 11-9-20
Tim Hennson
DISTRICT SEVEN ENGINEER OF LOCAL ROADS & STREETS

Releasing For Bid Based on Limited Review 11-9-20
Jeffrey L Myers III
REGION FOUR ENGINEER

STATE OF ILLINOIS
DEPARTMENT OF TRANSPORTATION

DATE: 11/03/2020
LICENSED PROFESSIONAL ENGINEER STEVEN W. MEGGENSON 062-50051 STATE OF ILLINOIS
EXPIRES: 11/30/2021

HAMPTON, LENZINI AND RENWICK, INC.
CIVIL ENGINEERS · STRUCTURAL ENGINEERS · LAND SURVEYORS
3085 STEVENSON DRIVE, SUITE 201
SPRINGFIELD, ILLINOIS 62703
217.546.3400 www.hlrengineering.com
184.000959
ILLINOIS PROFESSIONAL DESIGN FIRM LS / PE / SE CORPORATION

PROJECT NUMBER: 18.0572.130 DATE: 11/03/2020

CONTRACT NO. 95886 PRINTED BY THE AUTHORITY OF THE STATE OF ILLINOIS

SUMMARY OF QUANTITIES

	CODE NO.	ITEM	CONSTRUCTION TYPE CODE 0010 UNIT	TOTAL
^	20200100	EARTH EXCAVATION	CU YD	60
	20300100	CHANNEL EXCAVATION	CU YD	250
	20400800	FURNISHED EXCAVATION	CU YD	175
^	28100809	STONE DUMPED RIPRAP, CLASS A5	TON	710
	35101400	AGGREGATE BASE COURSE, TYPE B	TON	524
	40600275	BITUMINOUS MATERIALS (PRIME COAT)	POUND	2,176
	40600290	BITUMINOUS MATERIALS (TACK COAT)	POUND	804
	40600982	HOT-MIX ASPHALT SURFACE REMOVAL - BUTT JOINT	SQ YD	146
	40603085	HOT-MIX ASPHALT BINDER COURSE, IL- 19.0, N70	TON	450
	40604052	HOT-MIX ASPHALT SURFACE COURSE, IL-9.5, MIX "C", N70	TON	300
	48101500	AGGREGATE SHOULDERS, TYPE B 6"	SQ YD	516
^	50100100	REMOVAL OF EXISTING STRUCTURES	EACH	1
	50300225	CONCRETE STRUCTURES	CU YD	31.8
^	50400605	PRECAST PRESTRESSED CONCRETE DECK BEAMS (33" DEPTH)	SQ FT	2,580
	50800205	REINFORCEMENT BARS, EPOXY COATED	POUND	3,920
* ^	50901050	STEEL RAILING, TYPE SM	FOOT	171
	51201400	FURNISHING STEEL PILES HP10X42	FOOT	825
	51202305	DRIVING PILES	FOOT	825
	51203400	TEST PILE STEEL HP10X42	EACH	1
	51500100	NAME PLATES	EACH	1
	542D0229	PIPE CULVERTS, CLASS D, TYPE 1 24"	FOOT	120
*	63000001	STEEL PLATE BEAM GUARDRAIL, TYPE A, 6 FOOT POSTS	FOOT	50
*	63100087	TRAFFIC BARRIER TERMINAL, TYPE 6A	EACH	4
*	63100167	TRAFFIC BARRIER TERMINAL, TYPE 1 (SPECIAL) TANGENT	EACH	4
	63200310	GUARDRAIL REMOVAL	FOOT	156
	67100100	MOBILIZATION	L SUM	1
* ^	72501000	TERMINAL MARKER - DIRECT APPLIED	EACH	4
*	78200005	GUARDRAIL REFLECTORS, TYPE A	EACH	10
^	X2501000	SEEDING, CLASS 2 (SPECIAL)	ACRE	0.3

^ SEE SPECIAL PROVISIONS

* SPECIALTY ITEMS

GENERAL NOTES

1) ALL CONSTRUCTION SHALL BE DONE IN ACCORDANCE WITH THE STATE OF ILLINOIS "STANDARD SPECIFICATIONS FOR ROAD AND BRIDGE CONSTRUCTION, ADOPTED APRIL 1, 2016". (HERE IN AFTER REFERRED TO AS THE STANDARD SPECIFICATIONS; THE LATEST EDITION OF THE "ILLINOIS MANUAL ON UNIFORM TRAFFIC CONTROL DEVICES FOR STREETS AND HIGHWAYS"; THE DETAILS IN THE PLANS AND THE "SPECIAL PROVISIONS" INCLUDED IN THE DOCUMENTS.

2) ALL CLEARING, GRUBBING, FENCE REMOVAL, PAVEMENT REMOVAL, AND REMOVAL OF EXISTING DRAINAGE STRUCTURES SHALL BE INCLUDED IN THE COST OF EARTH EXCAVATION. ALL AGGREGATE AND BITUMINOUS PAVEMENT SHALL BE REMOVED AND PROPERLY DISPOSED OF BY THE CONTRACTOR IN A METHOD APPROVED BY THE ENGINEER. REMOVAL AND DISPOSAL OF PAVEMENT SHALL BE INCLUDED IN THE COST OF EARTH EXCAVATION AND NO ADDITIONAL COMPENSATION WILL BE ALLOWED.

3) ANY REFERENCE TO STANDARDS THROUGHOUT THE PLANS OR SPECIAL PROVISIONS SHALL BE INTERPRETED TO BE THE LATEST STANDARD OF THE DEPARTMENT.

4) THE CONTRACTOR SHALL CONSULT THE ENGINEER IN REGARD TO THE EXACT LENGTH OF PIPE CULVERTS AND PIPE DRAINS BEFORE ORDERING THESE ITEMS.

5) THE FOLLOWING RATES OF APPLICATION HAVE BEEN USED IN CALCULATING PLAN QUANTITIES

AGGREGATE BASE COURSE	2.05 TON/CU YD
HOT MIX ASPHALT	112 LBS/SQ YD/INCH THICKNESS
STONE DUMPED RIPRAP	1.75 TON/CU YD

BITUMINOUS MATERIALS RATES

SURFACE TYPE	RESIDUAL RATE
AGGREGATE BASE (PRIME COAT)	0.250 LB/SQ FT
MILLED HMA OR PCC (TACK COAT)	0.050 LB/SQ FT
EXISTING PAVEMENT (TACK COAT)	0.050 LB/SQ FT
TACK COAT (BETWEEN LIFTS)	0.025 LB/SQ FT

6) THE FINAL SURFACE OF ALL EMBANKMENT AREAS SHALL BE SEEDED. THE TOP 4 INCHES OF THE SEEDED AREAS SHALL BE TOPSOIL SUBJECT TO THE APPROVAL OF THE ENGINEER. THE COST OF SHAPING THE SLOPES AND PROVIDING TOP SOIL WILL NOT BE PAID FOR SEPARATELY BUT SHALL BE INCLUDED IN THE COST OF EARTH EXCAVATION.

7) THE AREA TO BE SEEDED SHALL CONSIST OF ALL DISTURBED EARTH SURFACES WITHIN THE RIGHT OF WAY OR AS DIRECTED BY THE ENGINEER.
   SEEDING, CLASS 2 (SPECIAL) = 0.3 ACRES

8) ALL WASTE MATERIAL FROM EXCAVATIONS SHALL BE DISPOSED OF BY THE CONTRACTOR. NO ADDITIONAL COMPENSATION WILL BE ALLOWED.

9) COMMITMENTS:
   1) TREES SHALL NOT BE CLEARED BETWEEN APRIL 1 AND SEPTEMBER 30.

EARTHWORK SCHEDULE

LOCATION	EARTH EXCAVATION	CHANNEL EXCAVATION	SHRINKAGE FACTOR	PERCENT USED	EXCAVATION ADJUSTED FOR SHRINKAGE	EMBANKMENT REQUIRED	EARTHWORK BALANCE
	CU.YD.	CU.YD.			CU.YD.	CU.YD.	CU.YD.
F.A.S. 806 / C.H. 8							
STA. 7+75.00 TO STA. 9+56.33	25		25.00%	100.00%	19	202	-183
STA. 9+56.33 TO STA. 10+43.67		250	25.00%	70.00%	131		131
STA. 10+43.67 TO STA. 12+25.00	34		25.00%	100.00%	25	146	-121
TOTAL	59	250			175	348	-173
USE	60	250					175

FURNISHED EXCAVATION 175 CU YDS

GUARDRAIL SCHEDULE

LOCATION	STEEL PLATE BEAM GUARDRAIL, TYPE A, 6 FOOT POSTS	TRAFFIC BARRIER TERMINAL, TYPE 6A	TRAFFIC BARRIER TERMINAL, TYPE 1 (SPECIAL) TANGENT	GUARDRAIL REMOVAL	TERMINAL MARKER - DIRECT APPLIED	GUARDRAIL REFLECTORS, TYPE A
F.A.S. 806 / C.H. 8	63000001	63100087	63100167	63200310	72501000	78200005
SEE SHEET 6 FOR LAYOUT	FOOT	EACH	EACH	FOOT	EACH	EACH
LT. STA. 8+82.19 TO LT. STA. 11+42.81	25	2	2	78	2	5
RT. STA. 8+57.19 TO RT. STA. 11+17.81	25	2	2	78	2	5
TOTAL	50	4	4	156	4	10

NOTE: SEE SHEET 6 FOR STATIONING AND LAYOUT

ROADWAY SCHEDULE

LOCATION	AGGREGATE BASE COURSE, TYPE B	BITUMINOUS MATERIALS (PRIME COAT)	BITUMINOUS MATERIALS (TACK COAT)	HOT-MIX ASPHALT SURFACE REMOVAL - BUTT JOINT	HOT-MIX ASPHALT BINDER COURSE, IL-19.0, N70	HOT-MIX ASPHALT SURFACE COURSE, IL-9.5, MIX "C", N70	AGGREGATE SHOULDERS, TYPE B 6"
	35101400	40600275	40600290	40600982	40603085	40604052	48101500
F.A.S. 806 / C.H. 8	TON	POUND	POUND	SQ YD	TON	TON	SQ YD
STA. 7+75.00 TO STA. 9+56.33	194	1,088	402	73	225	150	258
STA. 10+43.67 TO STA. 12+25.00	330	1,088	402	73	225	150	258
TOTAL	524	2176	804	146	450	300	516
USE	524	2176	804	146	450	300	516

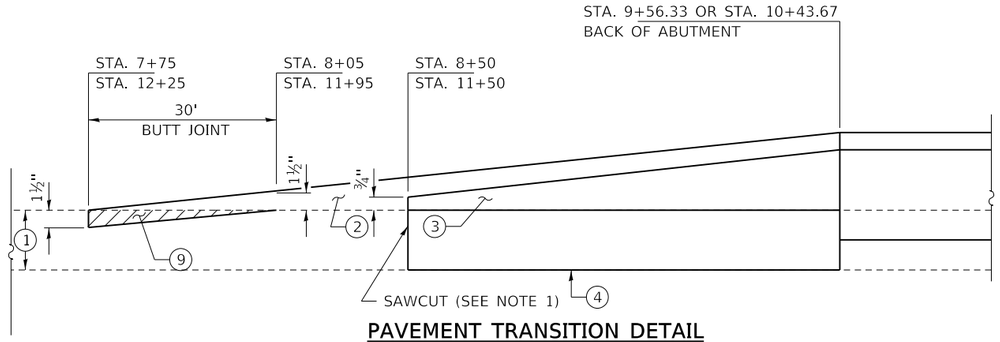

PAVEMENT TRANSITION DETAIL

AS DIRECTED BY THE ENGINEER

NOTES

1) COST OF SAWCUT SHALL BE INCLUDED IN THE UNIT COST BID FOR EARTH EXCAVATION.

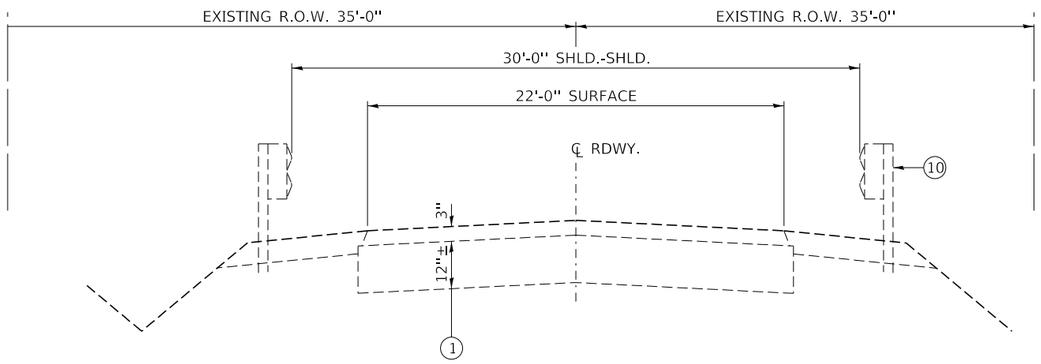

EXISTING TYPICAL CROSS SECTION

STA. 7+75 TO STA. 12+25

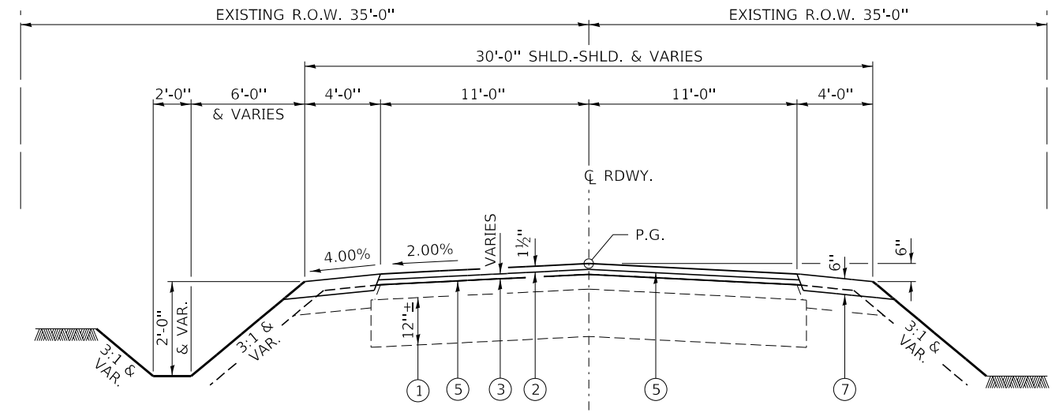

SUGGESTED CUT SECTION
CONSTRUCT AS SHOWN IN
STATION CROSS SECTIONS

PROPOSED TYPICAL CROSS SECTION

STA. 7+75 TO STA. 8+50 AND
STA. 11+50 TO 12+25

SUGGESTED FILL SECTION
CONSTRUCT AS SHOWN IN
STATION CROSS SECTIONS

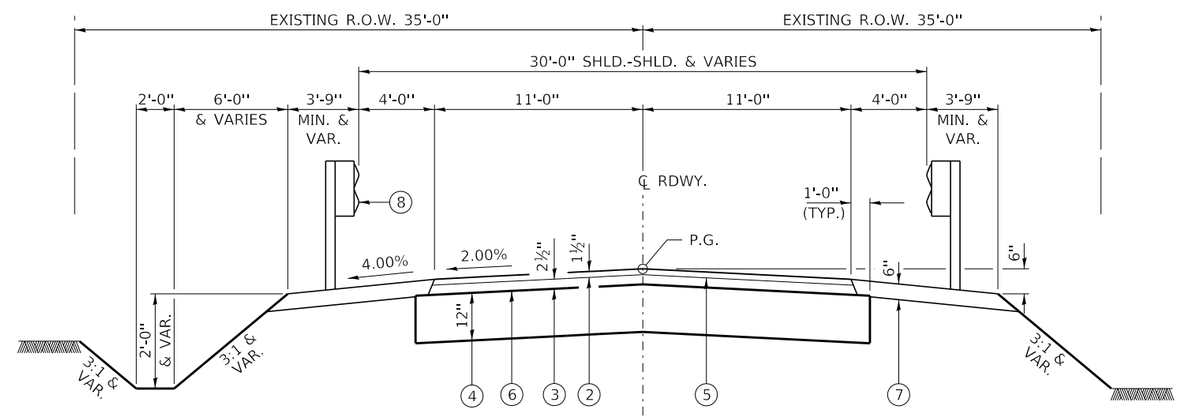

SUGGESTED CUT SECTION
CONSTRUCT AS SHOWN IN
STATION CROSS SECTIONS

PROPOSED TYPICAL CROSS SECTION

STA. 8+50 TO STA. 9+56.33 AND
STA.10+43.67 TO STA. 11+50

SEE SHEET 7 FOR TRANSITION AT BRIDGE.

SUGGESTED FILL SECTION
CONSTRUCT AS SHOWN IN
STATION CROSS SECTIONS

LEGEND

1. EXISTING ASPHALT SURFACE ON AGGREGATE BASE
2. HOT-MIX ASPHALT SURFACE COURSE, IL-9.5, MIX C, N70 (1½" THICKNESS).
3. HMA BINDER COURSE, IL.-19.0, N70 (2½" THICKNESS)
4. AGGREGATE BASE COURSE, TYPE B (12")
5. BITUMINOUS MATERIALS (TACK COAT)
6. BITUMINOUS MATERIALS (PRIME COAT)
7. AGGREGATE SHOULDERS, TYPE B 6"
8. TRAFFIC BARRIER TERMINAL, TYPE 6A / SPBGR
9. HOT-MIX ASPHALT SURFACE REMOVAL - BUTT JOINT
10. EXISTING GUARDRAIL & TERMINALS

EARTH EXCAVATION

HOT-MIX ASPHALT MIXTURE REQUIREMENTS		
LOCATIONS(S)	F.A.S. 806 / C.H. 8	F.A.S. 806 / C.H. 8
MIXTURE USE(S):	HOT-MIX ASPHALT SURFACE COURSE	LEVELING BINDER COURSE
PG:	PG 64-22	PG 64-22
DESIGN AIR VOIDS:	4% @ 70 Gyr.	4% @ 70 Gyr.
MIXTURE COMPOSITION: (MIXTURE GRADATION)	IL 9.5	IL 19.0
FRICTION AGGREGATE:	MIXTURE C	NONE
DENSITY TEST METHOD	CORES	CORES
MIXTURE WEIGHT:	112 LBS \ SY \ INCH THICKNESS	112 LBS \ SY \ INCH THICKNESS
QUALITY MANAGEMENT PROGRAM	QC/QA	QC/QA

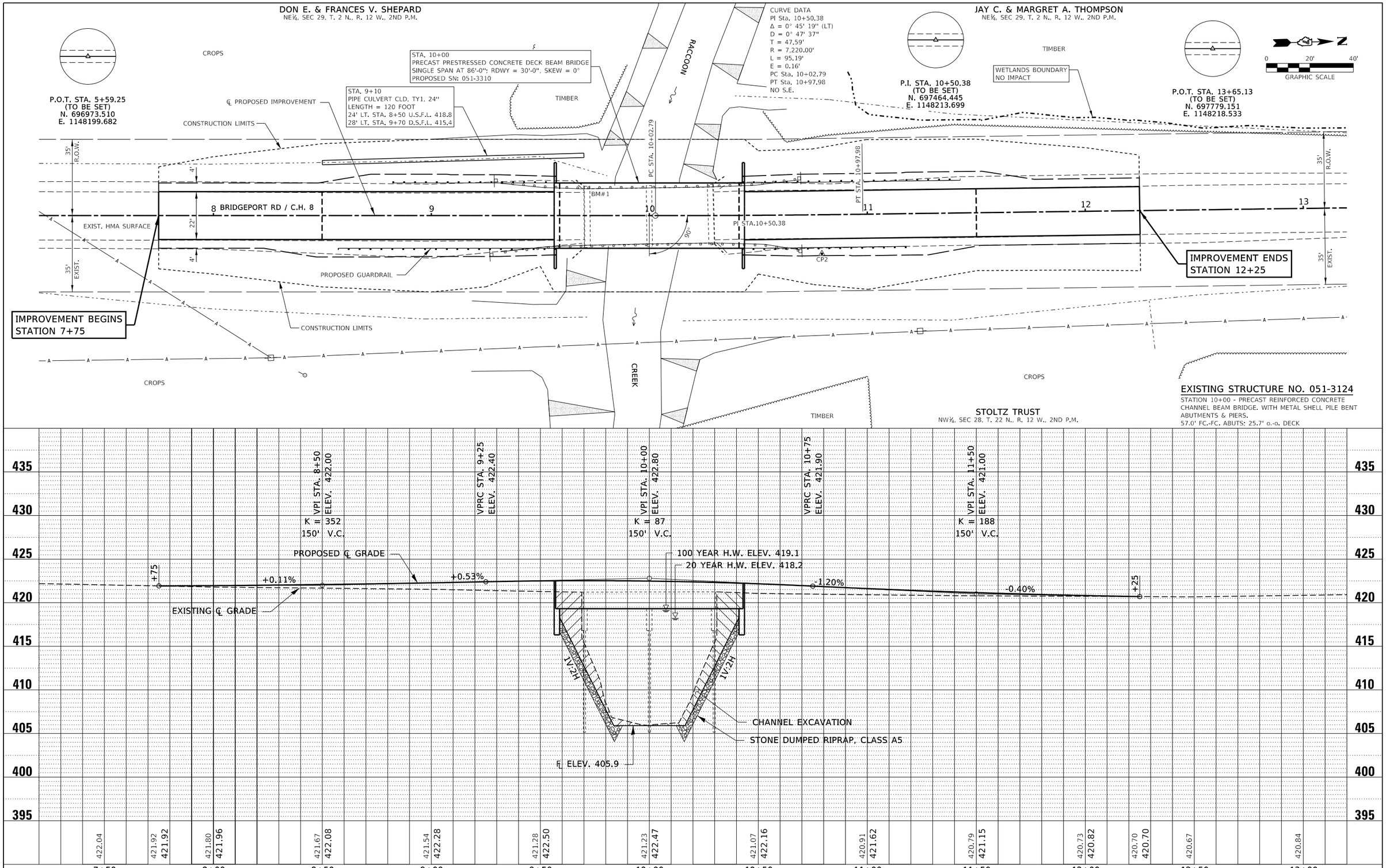

PLAN
SURVEYED
PLOTTED
ALIGNMENT CHECKED
RT. OF WAY CHECKED
CADD FILE NAME
NOTE BOOK
NO.
BY
DATE

PROFILE
SURVEYED
PLOTTED
GRADES CHECKED
B.M. NOTED
STRUCTURE NOTATNS CHKD
NOTE BOOK
NO.
BY
DATE

FILE NAME = 180572-sht-planprf.dgn	USER NAME = rhoslck	DESIGNED - S.A.A.	REVISED -	STATE OF ILLINOIS LAWRENCE COUNTY HIGHWAY DEPARTMENT	PLAN & PROFILE C.H. 8			F.A.S.	SECTION	COUNTY	TOTAL SHEETS	SHEET NO.
HAMPTON, LENZINI AND RENWICK, INC. 3085 STEVENSON DRIVE, SUITE 201 SPRINGFIELD, ILLINOIS 62703 ILLINOIS PROFESSIONAL DESIGN FIRM LS / PE / SE CORP. 184.000959		DRAWN - T.W.K.	REVISED -					806	18-00122-00-BR	LAWRENCE	29	5
	PLOT SCALE = $SCALE$	CHECKED - J.W.F.	REVISED -							CONTRACT NO. 95866		
	PLOT DATE = 11/3/2020	DATE - 11/03/2020	REVISED -		SCALE: 5V:20H	SHEET NO. 1 OF 1 SHEETS	STA. 7+00.00 TO STA. 13+00.00		ILLINOIS	FED. AID PROJECT VFL2(092)		

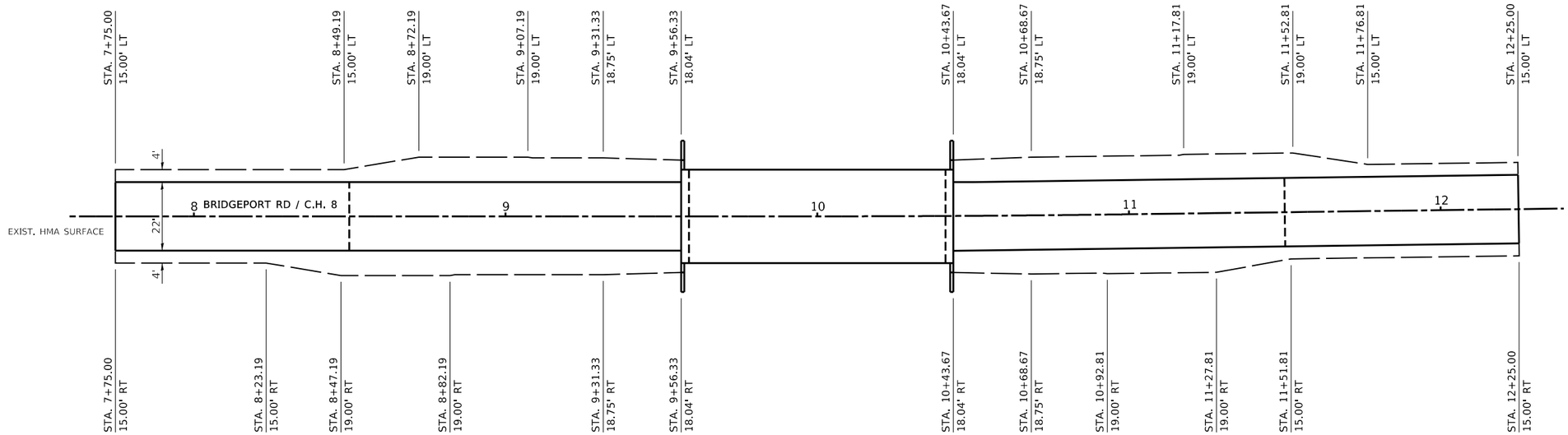

SHOULDER LAYOUT

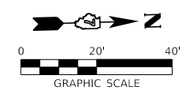

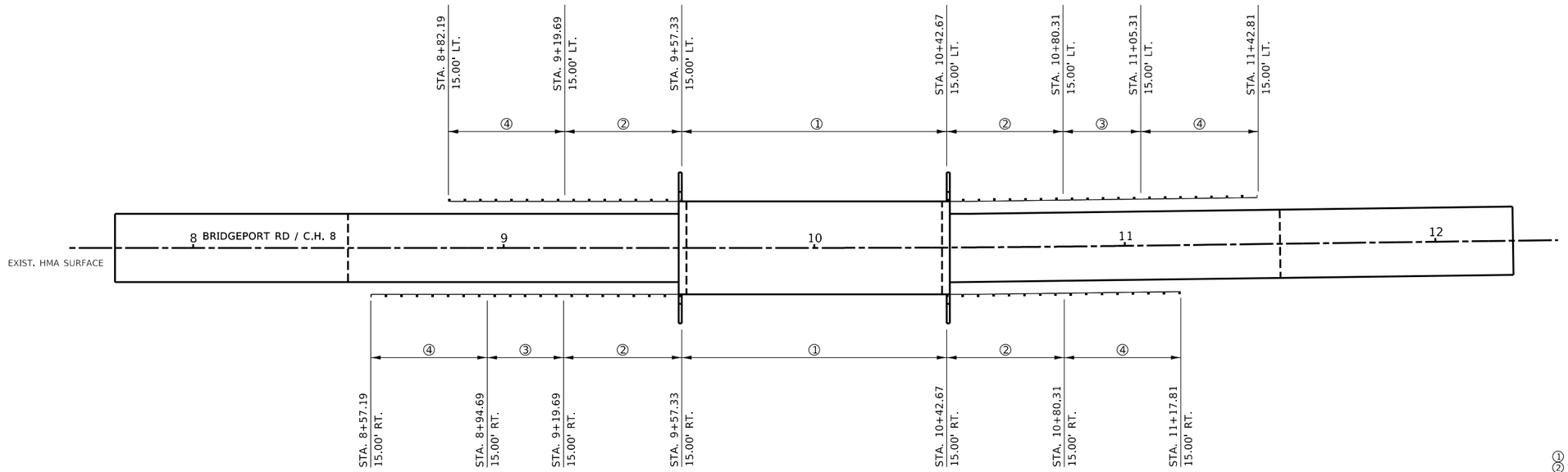

GUARDRAIL LAYOUT

① STEEL RAILING, TYPE SM
② TBT TY 6A
③ SPBGR, TY A, 6 FT POSTS
④ TBT TY 1, SPECIAL TANGENT

FILE NAME = 180572-sht-guardrail.dgn	USER NAME = rhosick	DESIGNED - J.W.F.	REVISED -	STATE OF ILLINOIS LAWRENCE COUNTY HIGHWAY DEPARTMENT	GUARDRAIL & SHOULDER LAYOUT			F.A.S.	SECTION	COUNTY	TOTAL SHEETS / SHEET NO.
HAMPTON, LENZINI AND RENWICK, INC. 3085 STEVENSON DRIVE, SUITE 201 SPRINGFIELD, ILLINOIS 62703		DRAWN - M.M.P.	REVISED -					806	18-00122-00-BR	LAWRENCE	29 / 6
	PLOT SCALE = $SCALE$	CHECKED - S.W.M.	REVISED -							CONTRACT NO. 95886	
ILLINOIS PROFESSIONAL DESIGN FIRM LS / PE / SE CORP. 184.000959	PLOT DATE = 11/3/2020	DATE - 11/03/2020	REVISED -		SCALE:	SHEET NO. 1 OF 1 SHEETS	STA. TO STA.		ILLINOIS	FED. AID PROJECT VFL2(092)	

EXISTING STRUCTURE NO. 051-3124: Sta. 10+00 – Three span precast reinforced concrete channel beam bridge with metal shell pile bent abutments and piers. 57.0' fc.-fc.; 25.7' o.-o. deck.

Structure closed to traffic during construction.

No Salvage

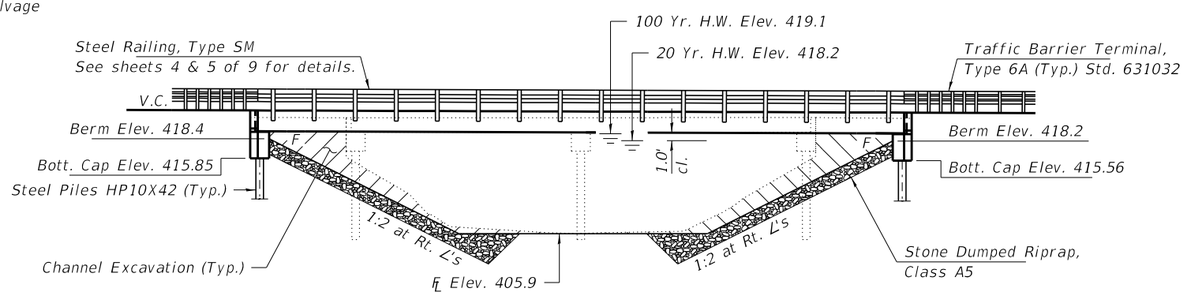

ELEVATION

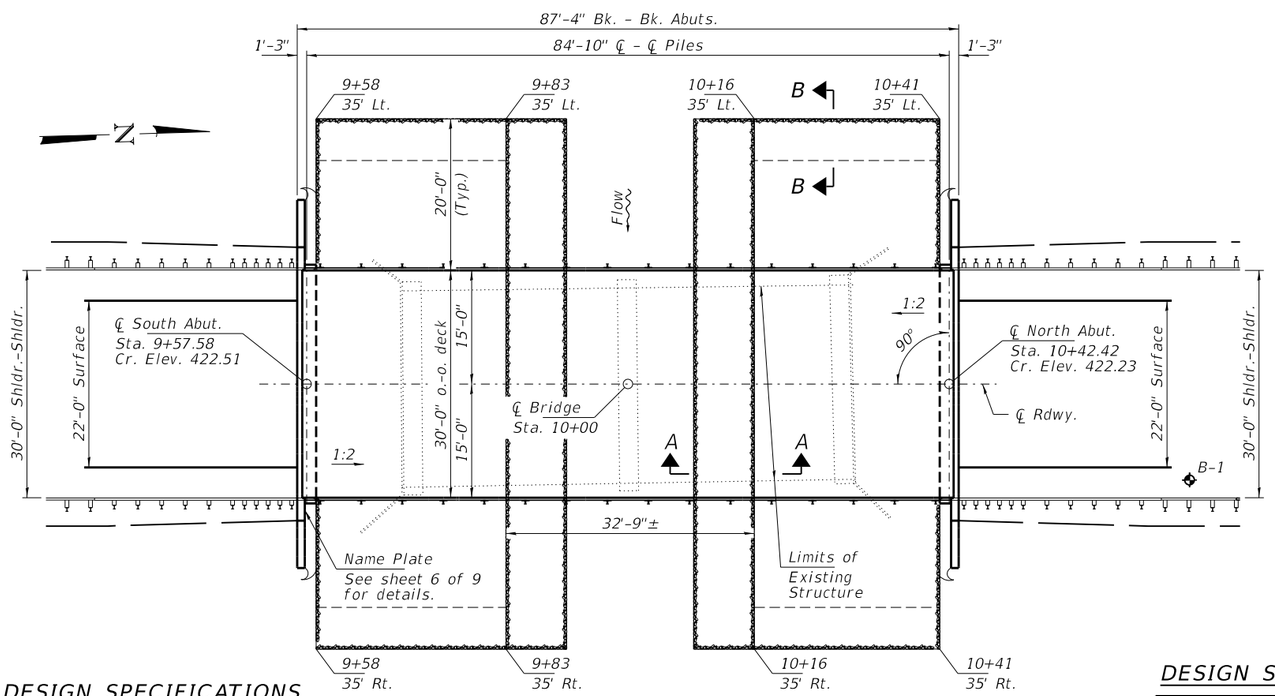

PLAN

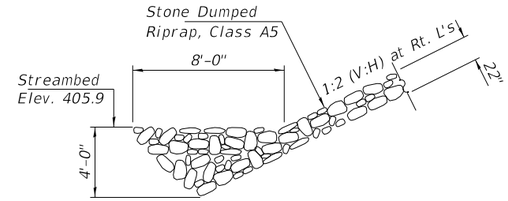

SECTION A-A

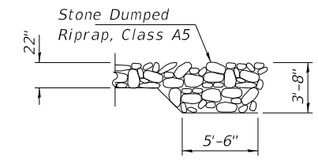

SECTION B-B

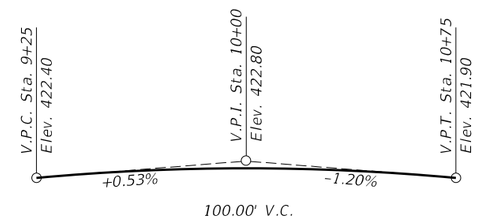

PROFILE GRADE

F.A.S. 806 / C.H. 8

GENERAL NOTES

Layout of the slope protection system may be varied to suit ground conditions in the field as directed by the Engineer.

The Contractor shall drive test piles to 110% of the nominal required bearing specified in production locations at South Abutment or approved by the Engineer before ordering the remainder of piles.

Reinforcement bars shall conform to the requirements of ASTM A 706 Gr 60 (IL Modified). See Special Provisions.

All bars to be epoxy coated.

Excavation required to construct the Abutments shall be included in the cost of Concrete Structures. No additional compensation will be allowed for Structure Excavation.

All proposed construction activities shall be in accordance with Nationwide Permit number 14 of the Department of the Army authorized under Section 404 of the Clean Water Act. The IEPA has issued Section 401 Water Quality Certification for this activity. See Special Provisions for conditions.

INDEX OF STRUCTURE SHEETS

1. General Plan & Elevation
2. 33"x36" PPC Deck Beam
3. 33"x36" PPC Deck Beam Details
4. Superstructure Details
5. Steel Railing, Type SM
6. South Abutment
7. North Abutment
8. HP Pile Details
9. Boring

RACCOON CREEK
BUILT 202_ BY
LAWRENCE COUNTY
SEC. 18-00122-00-BR
F.A.S. 806 / C.H. 8
STR. NO. 051-3310
LOADING HL-93

NAME PLATE

See Std. 515001

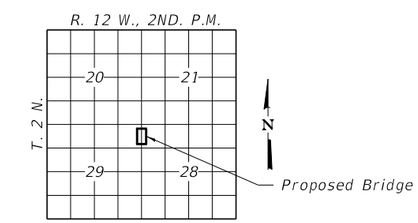

LOCATION SKETCH

DESIGN SPECIFICATIONS

2020 AASHTO LRFD Bridge Design Specifications, 9th Edition with all interims.

LOADING HL-93

Allow 50#/sq. ft. for future wearing surface.

DESIGN STRESSES

FIELD UNITS

f'c = 3,500 psi
fy = 60,000 psi (Reinf.)

PRECAST PRESTRESSED UNITS

f'c = 6,000 psi
f'ci = 5,000 psi
fpu = 270,000 psi (½"Ø low lax. strands)
fpbt = 201,960 psi (½"Ø low lax. strands)
fy = 60,000 psi (Reinf.)

SEISMIC DATA

Seismic Performance Zone (SPZ) = 2
Design Spectral Acceleration at 1.0 sec. (S_{D1}) = 0.243g
Design Spectral Acceleration at 0.2 sec. (S_{DS}) = 0.563g
Soil Site Class = D

WATERWAY INFORMATION

Drainage Area = 52.7 Sq. Mi.
Existing Low Grade Elev. 420.7 @ Sta. 12+50
Proposed Low Grade Elev. 420.7 @ Sta. 12+50

Flood	Freq. Yr.	Q C.F.S.	Opening Sq. Ft. Exist.	Opening Sq. Ft. Prop.	Nat. H.W.E.	Head - Ft. Exist.	Head - Ft. Prop.	Headwater El. Exist.	Headwater El. Prop.
	10	3330	530	640	417.7	0.6	0.2	418.3	418.0
Design	20	4140	560	680	418.2	1.7	0.4	419.9	418.6
Base/Overtop	100	6110	630	750	419.1	2.0	1.3	421.1	420.4
Scour Check	200	6960	640	760	419.4	2.1	1.7	421.5	421.1
Max Calc.	500	8190	640	760	419.8	2.0	2.0	421.8	421.9

10 Year Velocity through Existing Bridge = 6.3 fps 10 Year Velocity through Proposed Bridge = 5.2 fps

DESIGN SCOUR ELEVATION TABLE

Event/Limit State	Design Scour Elev. (ft.) S. Abut.	Design Scour Elev. (ft.) N. Abut.	Item 113
Q100	415.8	415.8	8
Q200	415.8	415.8	
Design	415.8	415.8	
Check	415.8	415.8	

I certify that to the best of my knowledge, information and belief, this bridge design is structurally adequate for the design loading shown on the plans. The design is an economical one for the style of structure and complies with requirements of the current "AASHTO LRFD Specifications."

Steven W. Megginson 11/03/2020
ILLINOIS STRUCTURAL NO. 081-6064

LICENSED STRUCTURAL ENGINEER STEVEN W. MEGGINSON 081-6064 SPRINGFIELD, IL STATE OF ILLINOIS

Expires 11-30-2022

TOTAL BILL OF MATERIAL

ITEM	UNIT	SUPER	SUB	TOTAL
Channel Excavation	Cu. Yd.			250
Stone Dumped Riprap, Class A5	Ton			710
Removal of Existing Structures	Each			1
Concrete Structures	Cu. Yd.		31.8	31.8
Precast Prestressed Conc. Deck Beams (33" Depth)	Sq. Ft.	2,580		2,580
Reinforcement Bars, Epoxy Coated	Pound		3,920	3,920
Steel Railing, Type SM	Foot	171		171
Furnishing Steel Piles HP10X42	Foot		825	825
Driving Piles	Foot		825	825
Test Pile Steel HP10x42	Each		1	1
Name Plates	Each		1	1
Terminal Marker - Direct Applied	Each	4		4

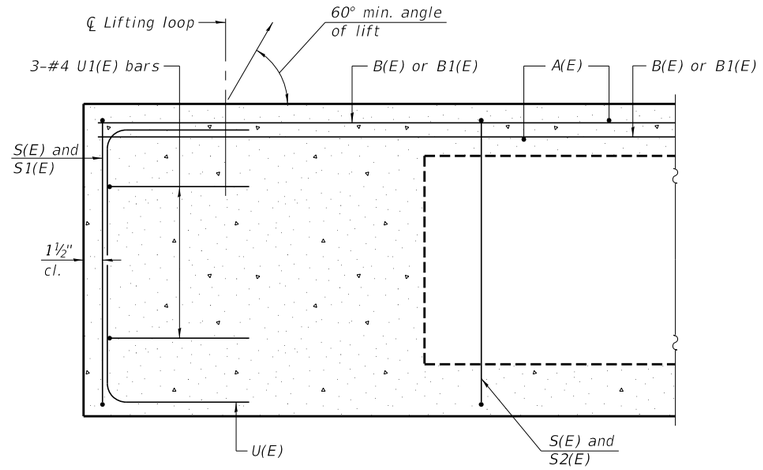

SECTION A-A

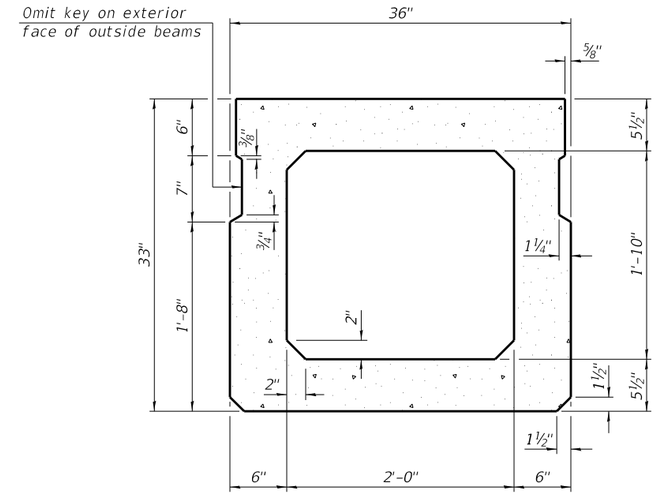

SECTION B-B
(Showing dimensions)

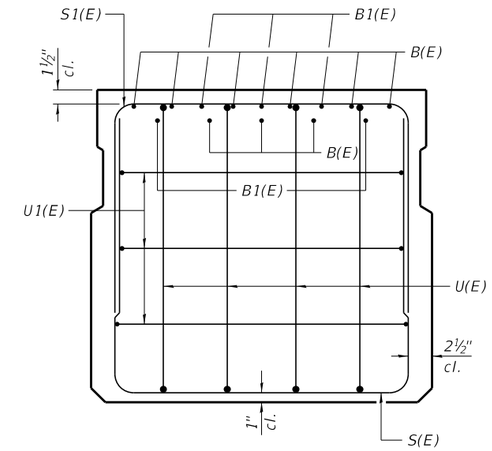

VIEW C-C

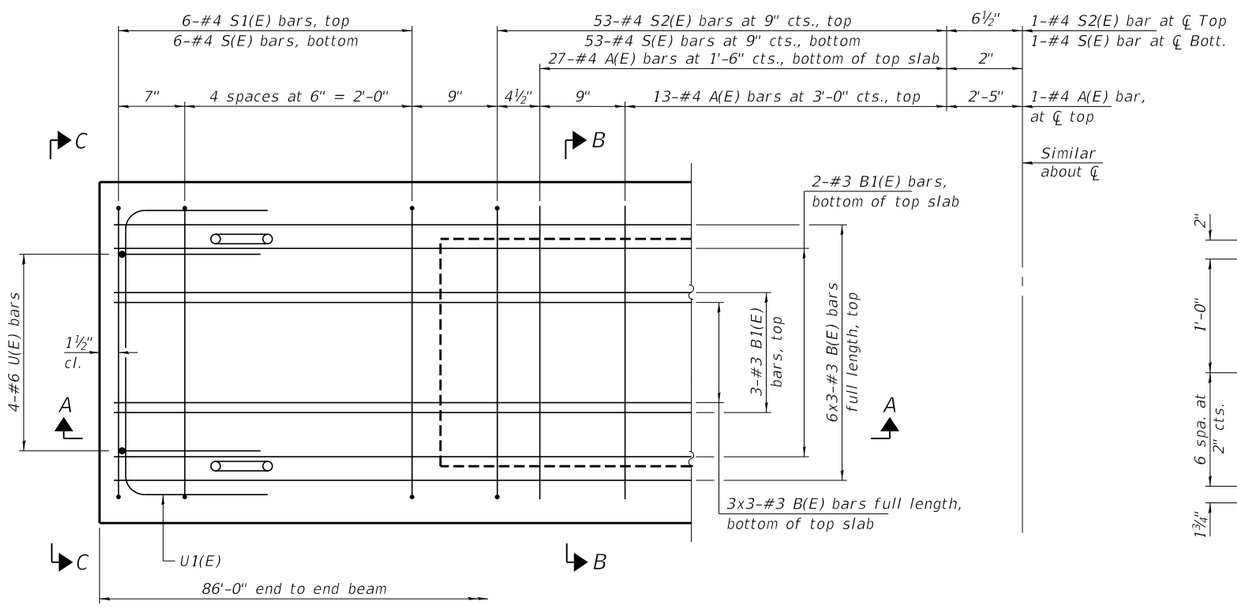

PLAN VIEW

Note: Spacing of S(E) and S2(E) bars may be adjusted up to 4" in the immediate area of the transverse tie diaphragms to miss the block outs for the transverse ties.
Bars indicated thus 6x3-#3 etc. indicates 6 lines of bars with 3 lengths per line.

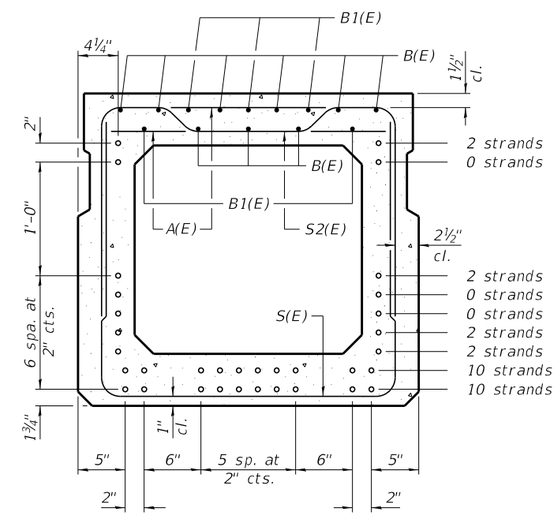

SECTION B-B
(Showing reinforcement and permissible strand locations)

Note:
Place the number of strands specified in each row symmetrically about the centerline of beam in the permissible strand locations shown.

BAR LIST
ONE BEAM ONLY
(For information only)

Bar	No.	Size	Length	Shape
A(E)	81	#4	2'-7"	—
B(E)	27	#3	29'-7"	—
B1(E)	10	#3	10'-0"	—
S(E)	119	#4	7'-8"	⊔
S1(E)	12	#4	6'-5"	⊓
S2(E)	107	#4	6'-8"	⊓
U(E)	8	#6	5'-0"	⊏
U1(E)	6	#4	5'-0"	⊓

Note:
See sheet 3 & 4 of 9 for additional details and Bill of Material.

MINIMUM BAR LAP
#3 bar = 1'-6"

PD-3336-0 1-1-2020

FILE NAME = 180572-sht-bridge 33" beam.dgn	USER NAME = rhoslck	DESIGNED - J.R.B.	REVISED -	STATE OF ILLINOIS LAWRENCE COUNTY HIGHWAY DEPARTMENT	33" x 36" PPC DECK BEAM STRUCTURE NO. 051-3310	F.A.S.	SECTION	COUNTY	TOTAL SHEETS / SHEET NO.
HAMPTON, LENZINI AND RENWICK, INC. 3085 STEVENSON DRIVE, SUITE 201 SPRINGFIELD, ILLINOIS 62703		CHECKED - S.W.M.	REVISED -			806	18-00122-00-BR	LAWRENCE	29 / 8
	PLOT SCALE =	DRAWN - M.M.P.	REVISED -					CONTRACT NO. 95886	
ILLINOIS PROFESSIONAL DESIGN FIRM LS / PE / SE CORP. 184.000959	PLOT DATE = 11/3/2020	CHECKED - S.W.M.	REVISED -		SHEET NO. 2 OF 9 SHEETS			ILLINOIS FED. AID PROJECT VFLV(092)	

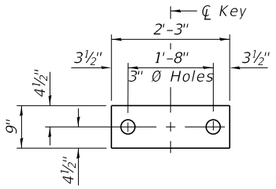

FABRIC BEARING PAD
(Interior - 18 Req'd.)

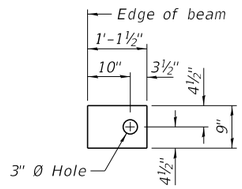

FABRIC BEARING PAD
(Exterior - 4 Req'd.)

FIXED

Notes:
All bearing pads shall be 1" thick.
Omit holes when using expansion bearings.
Expansion bearing pads shall be bonded to the substructure.

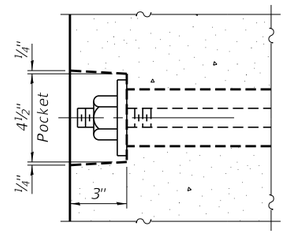

SECTION A-A

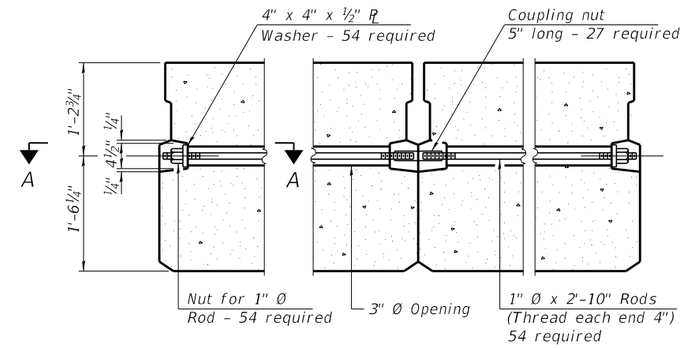

TYPICAL TRANSVERSE TIE ASSEMBLY

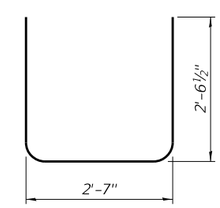

BAR S(E)

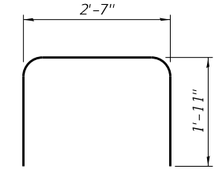

BAR S1(E)

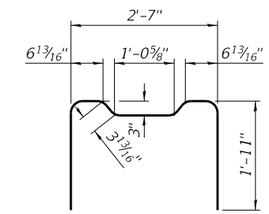

BAR S2(E)

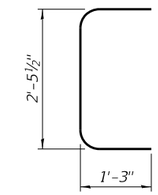

BAR U(E)

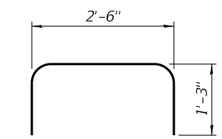

BAR U1(E)

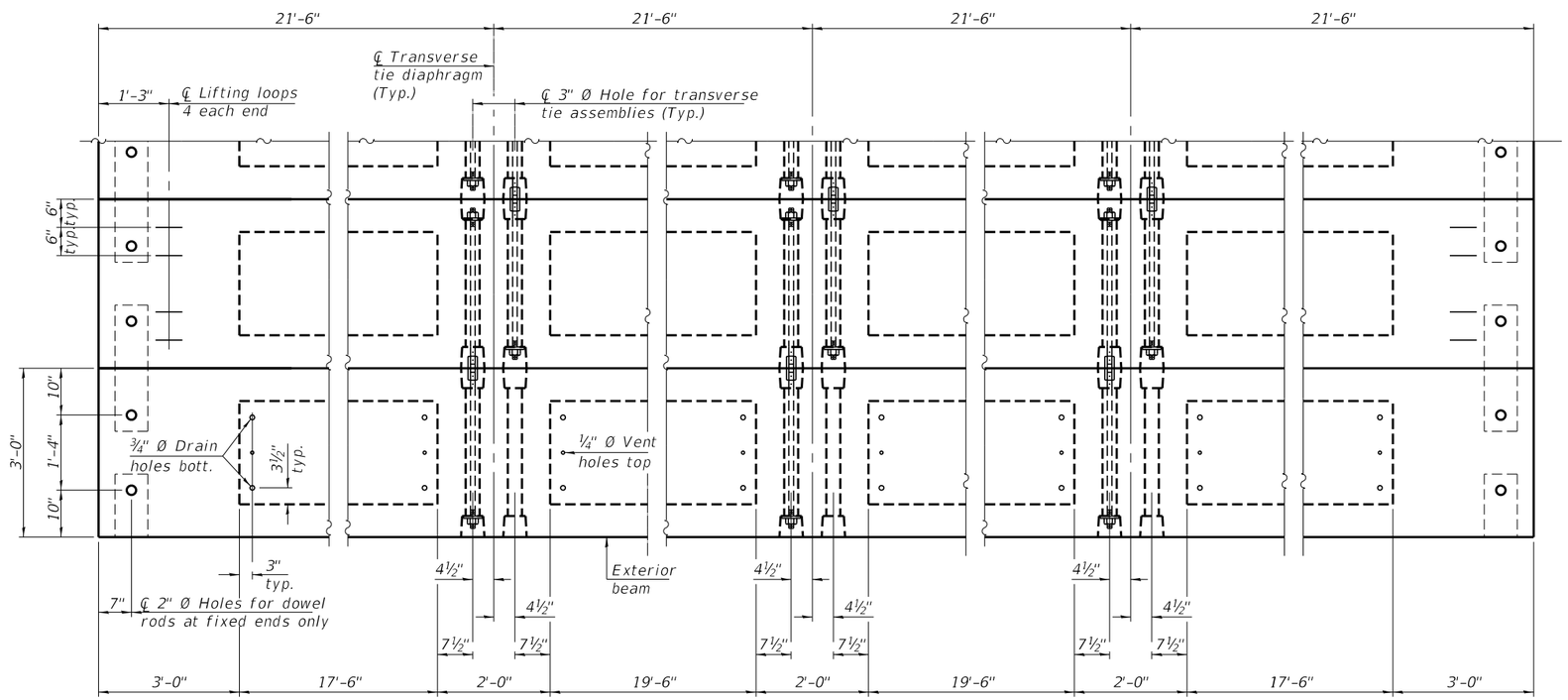

PLAN VIEW

Note:
Connect beams in pairs with the transverse tie configuration shown.

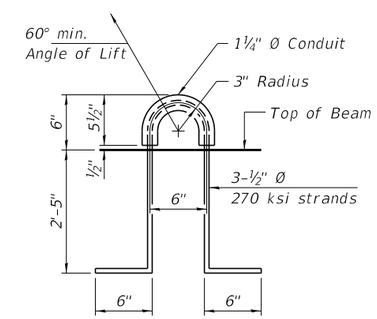

LIFTING LOOP DETAIL

NOTES

Prestressing steel shall be uncoated high strength, low relaxation 7-wire strand, Grade 270. The nominal diameter shall be ½" and the nominal cross-sectional area shall be 0.153 sq. in.

The 1" Ø rods in the transverse tie assembly shall be tightened to a snug fit and the threads set. Pockets on exterior faces of bridge shall be filled with grout after transverse tie assembly is in place.

Two ⅛" fabric adjusting shims of the dimensions of the exterior bearing pad shall be provided for each bearing pad location.

A minimum 2½" Ø lifting pin shall be used to engage the lifting loops during handling.

Corrosion Inhibitor, per Article 1020.05(b)(10) and 1021.07 of the Standard Specifications, shall be used in the concrete for precast prestressed concrete deck beams.

Compressive strength of prestressed concrete, f'c, shall be 6000 psi.

Compressive strength of prestressed concrete at release, f'ci, shall be 5000 psi.

Reinforcement bars designated (E) shall be epoxy coated.

BILL OF MATERIAL

Precast Prestressed Conc. Deck Bms. (33" depth)	Sq. Ft.	2,580

PDD-3336-0 1-1-2020

FILE NAME = 180572-sht-bridge 33" beam.dgn	USER NAME = rhoslck	DESIGNED - J.R.B.	REVISED -	STATE OF ILLINOIS LAWRENCE COUNTY HIGHWAY DEPARTMENT
HAMPTON, LENZINI AND RENWICK, INC. 3385 STEVENSON DRIVE, SUITE 201 SPRINGFIELD, ILLINOIS 62703 ILLINOIS PROFESSIONAL DESIGN FIRM LS / PE / SE CORP. 184.000959		CHECKED - S.W.M.	REVISED -	
	PLOT SCALE =	DRAWN - M.M.P.	REVISED -	
	PLOT DATE = 11/3/2020	CHECKED - S.W.M.	REVISED -	

33" x 36" PPC DECK BEAM DETAILS
STRUCTURE NO. 051-3310

SHEET NO. 3 OF 9 SHEETS

F.A.S.	SECTION	COUNTY	TOTAL SHEETS	SHEET NO.
806	18-00122-00-BR	LAWRENCE	29	9
		CONTRACT NO. 95886		
		ILLINOIS FED. AID PROJECT VFLV(092)		

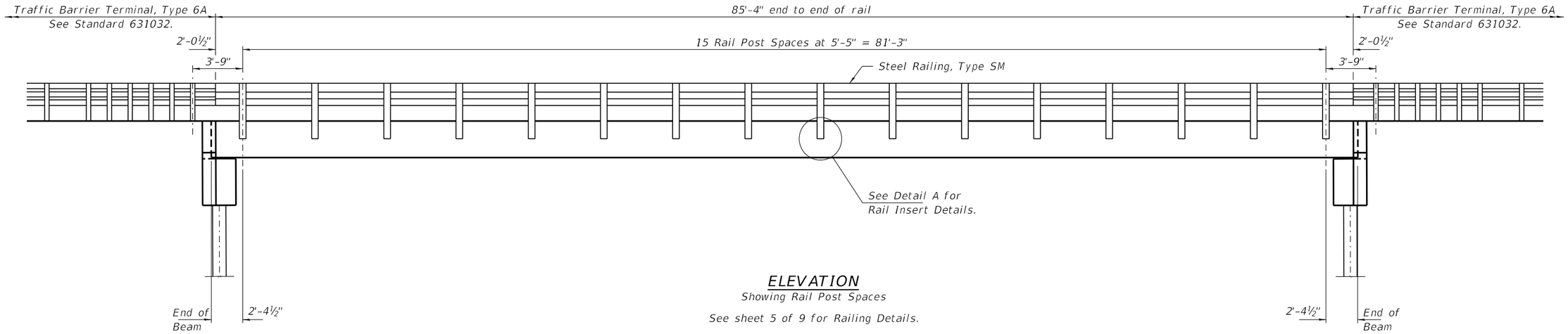

ELEVATION

Showing Rail Post Spaces

See sheet 5 of 9 for Railing Details.

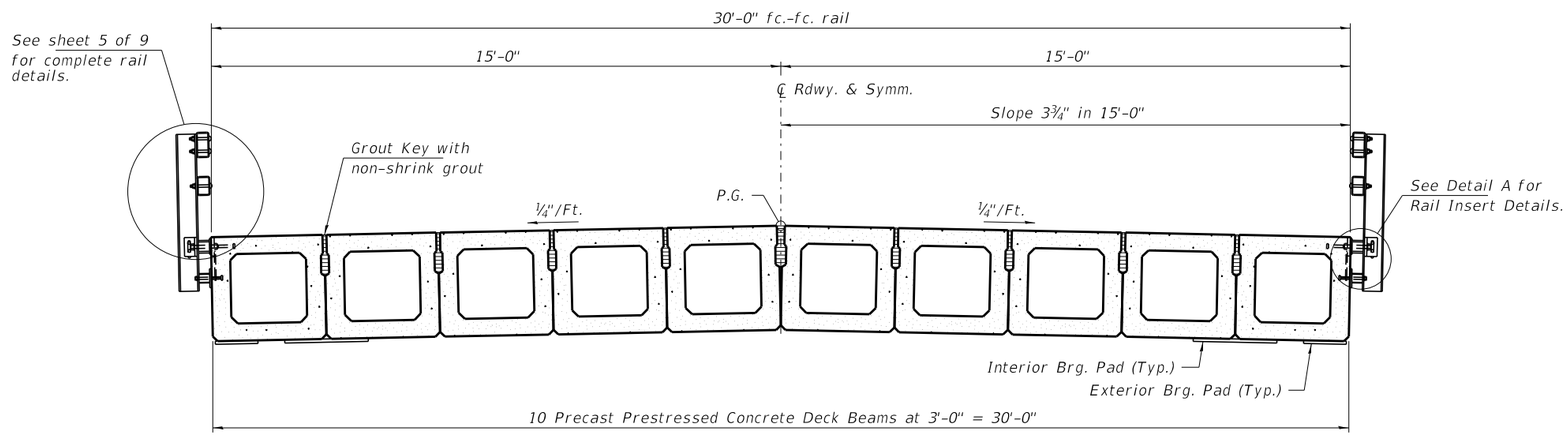

CROSS SECTION

See sheets 2 & 3 of 9 for Superstructure.

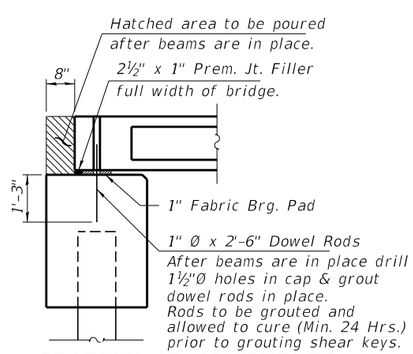

SECTION AT ABUTMENTS

at Rt. ℄'s

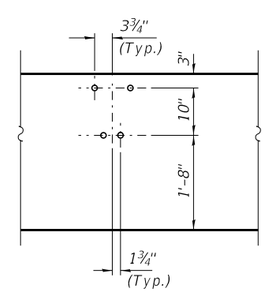

DETAIL A

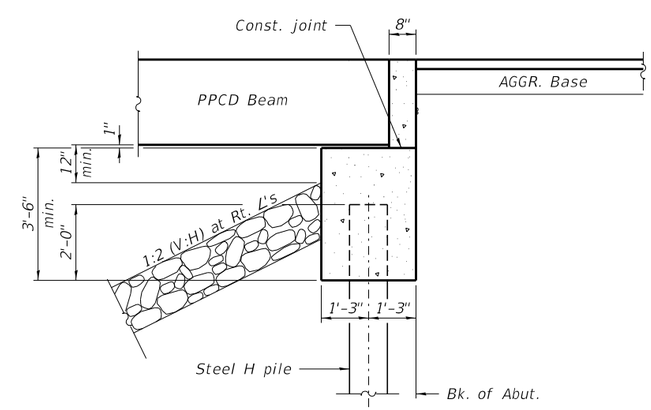

SECTION THRU ABUTMENT

(Horiz. dim. at Rt. ℄'s)

FILE NAME = 180572-shl-bridge 33" beam.dgn	USER NAME = rhoslck	DESIGNED - J.R.B.	REVISED -	STATE OF ILLINOIS LAWRENCE COUNTY HIGHWAY DEPARTMENT	SUPERSTRUCTURE DETAILS STRUCTURE NO. 051-3310	F.A.S.	SECTION	COUNTY	TOTAL SHEETS	SHEET NO.
HAMPTON, LENZINI AND RENWICK, INC. 3365 STEVENSON DRIVE, SUITE 201 SPRINGFIELD, ILLINOIS 62703 ILLINOIS PROFESSIONAL DESIGN FIRM LS / PE / SE CORP. 184.000959		CHECKED - S.W.M.	REVISED -			806	18-00122-00-BR	LAWRENCE	29	10
	PLOT SCALE =	DRAWN - M.M.P.	REVISED -					CONTRACT NO. 95886		
	PLOT DATE = 11/3/2020	CHECKED - S.W.M.	REVISED -		SHEET NO. 4 OF 9 SHEETS		ILLINOIS	FED. AID PROJECT VFLV(092)		

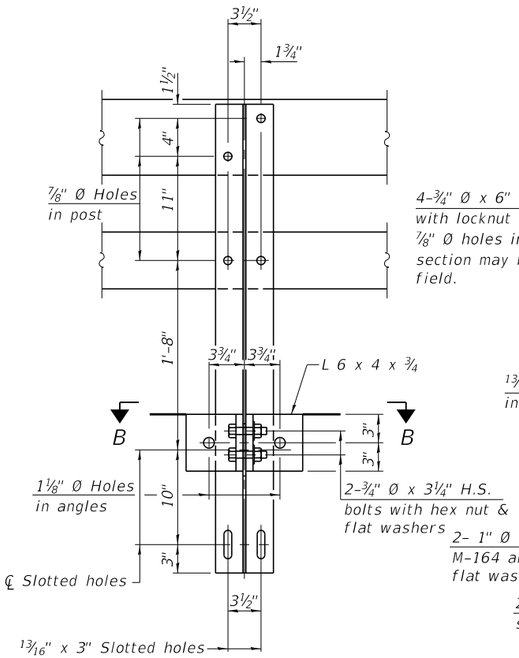

SECTION A-A

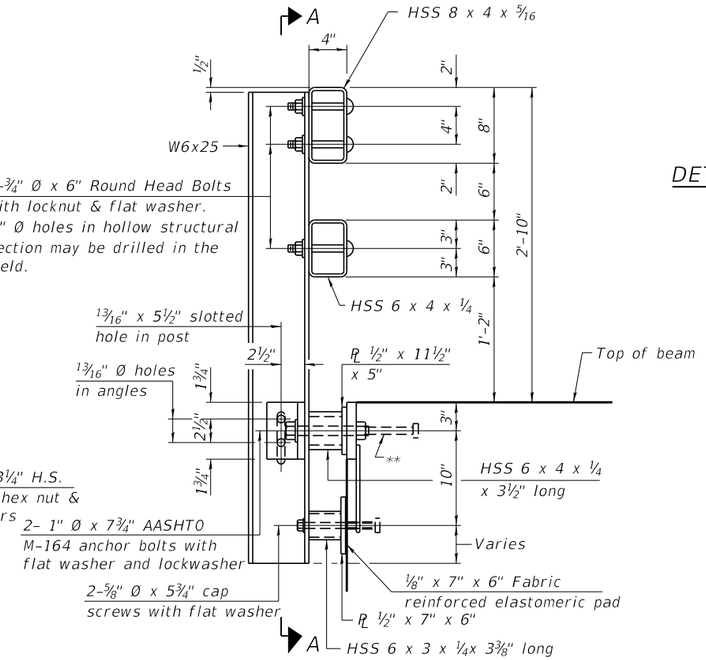

SECTION AT RAIL POST

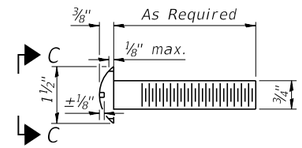

DETAIL OF ¾" Ø ROUND HEAD BOLT

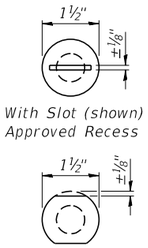

VIEW C-C

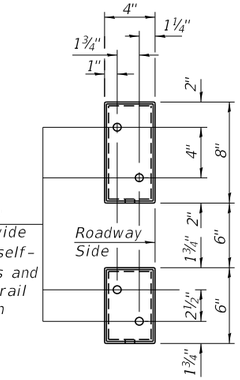

VIEW D-D

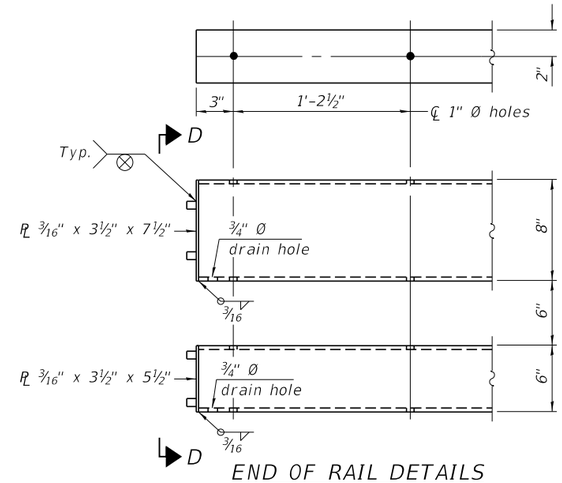

END OF RAIL DETAILS

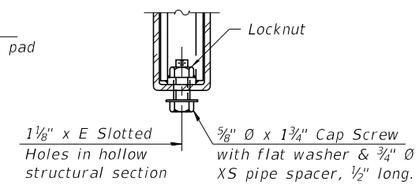

RAIL SPLICE CONNECTION AT EXPANSION JT.

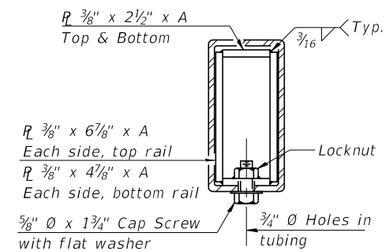

SECTION AT RAIL SPLICE

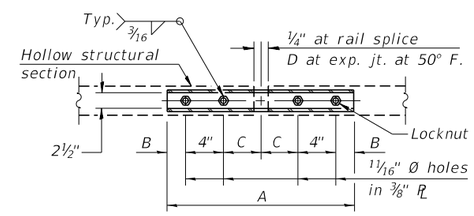

PLAN-BOTT. SPLICE PL TYPICAL

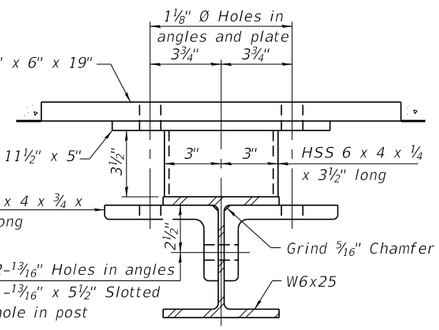

SECTION B-B

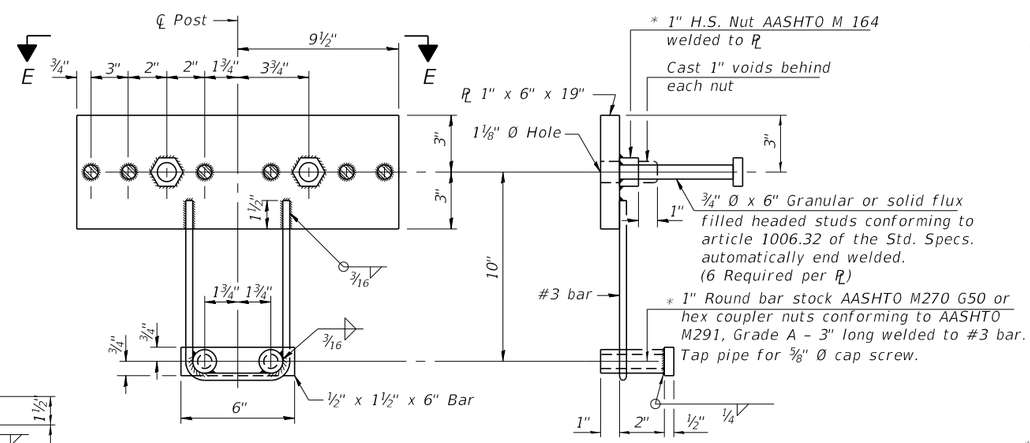

ANCHOR DEVICE

*Threaded areas shall be plugged or blocked off during casting of beam. Galvanized after fabrication.

SPLICE DIMENSIONS

T	D	A	B	C	E
≤ 4"	2½"	1'-8"	2"	4"	2½"
> 4" ≤ 6½"	3¾"	2'-0"	2½"	5½"	3½"
> 6½" ≤ 9"	5"	2'-4"	3½"	6½"	9"
> 9" ≤ 13"	7"	2'-10"	4½"	8½"	11"
Rail Splice	¼"	1'-8"	2"	4"	——

T = Total movement at expansion joint as shown on the design plans.

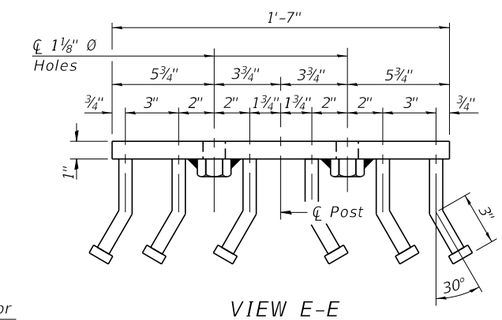

VIEW E-E

Notes:

For multi-span bridges, sufficient ¼" x 6" x 1'-2" galvanized steel shims shall be provided to align rail between adjacent spans. Cost included with Steel Railing, Type SM.

All steel rail members shall be galvanized according to Article 509.05 of the Standard Specifications.

** The studs of the anchor devices shall be placed below the top reinforcement bars and the outermost longitudinal reinforcement bar shall be placed directly above the studs of the rail post anchor device. The anchorage studs may be bent down ½" to accommodate the top reinforcement bar placement.

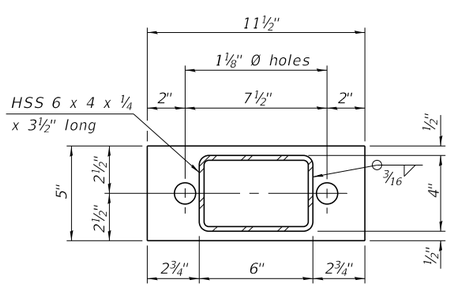

PL ½" x 11½" x 5"

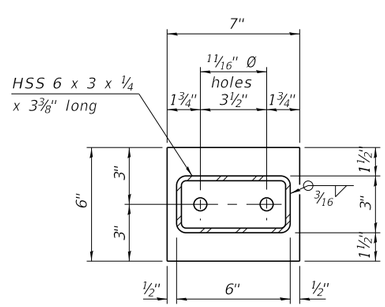

PL ½" x 7" x 6"

BILL OF MATERIAL

Item	Unit	Quantity
Steel Railing, Type SM	Foot	171

R-34HMAWS 8-11-2017 (6'-3" Maximum Post Spacing) (1¼" minimum to 3⅛" maximum HMA thickness)

FILE NAME = 180572-sht-bridge 33" beam.dgn	USER NAME = rhoslck	DESIGNED - J.R.B.	REVISED -
HAMPTON, LENZINI AND RENWICK, INC. 3085 STEVENSON DRIVE, SUITE 201 SPRINGFIELD, ILLINOIS 62703 ILLINOIS PROFESSIONAL DESIGN FIRM LS / PE / SE CORP. 184.000959		CHECKED - S.W.M.	REVISED -
	PLOT SCALE =	DRAWN - M.M.P.	REVISED -
	PLOT DATE = 11/3/2020	CHECKED - S.W.M.	REVISED -

STATE OF ILLINOIS
LAWRENCE COUNTY HIGHWAY DEPARTMENT

STEEL RAILING, TYPE SM
STRUCTURE NO. 051-3310

SHEET NO. 5 OF 9 SHEETS

F.A.S.	SECTION	COUNTY	TOTAL SHEETS	SHEET NO.
806	18-00122-00-BR	LAWRENCE	29	11
		CONTRACT NO. 95886		
		ILLINOIS FED. AID PROJECT VFLV(092)		

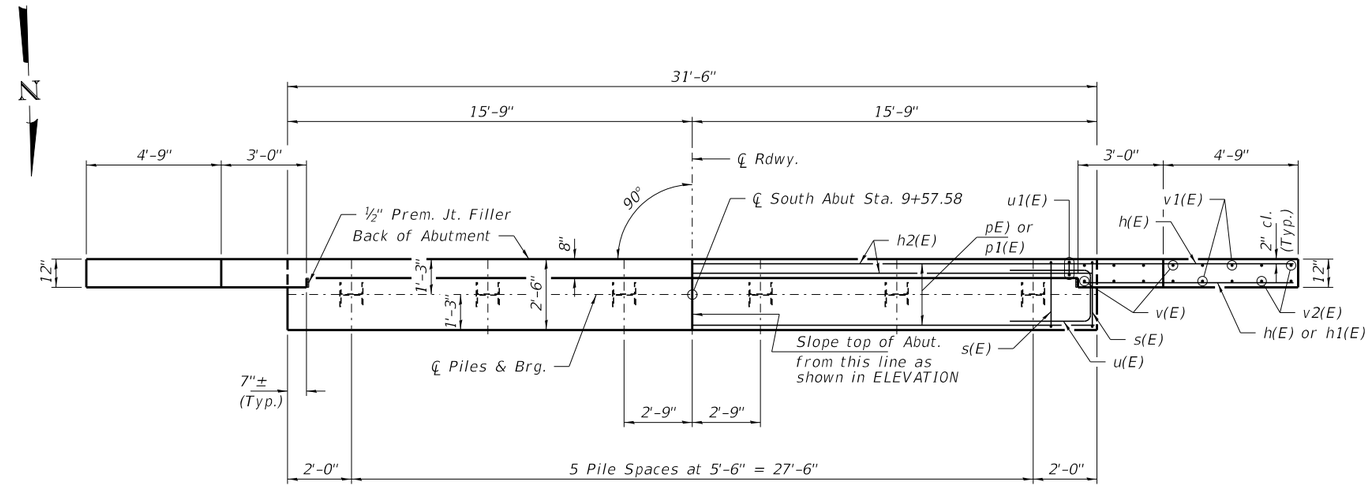

PLAN

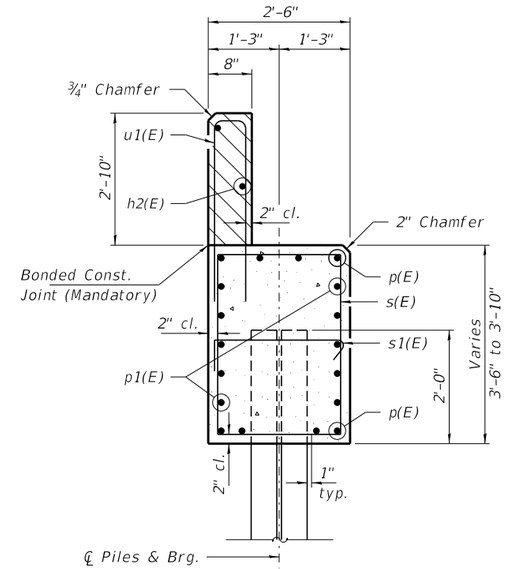

SECTION A-A

Hatched area to be poured after beams are in place.

Cast top of wingwall flush with exterior beam face after beams have been erected.

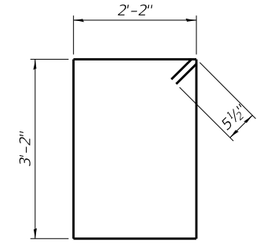

BAR s(E)

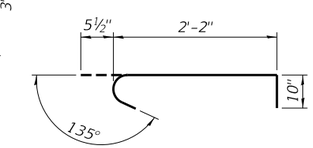

BAR s1(E)

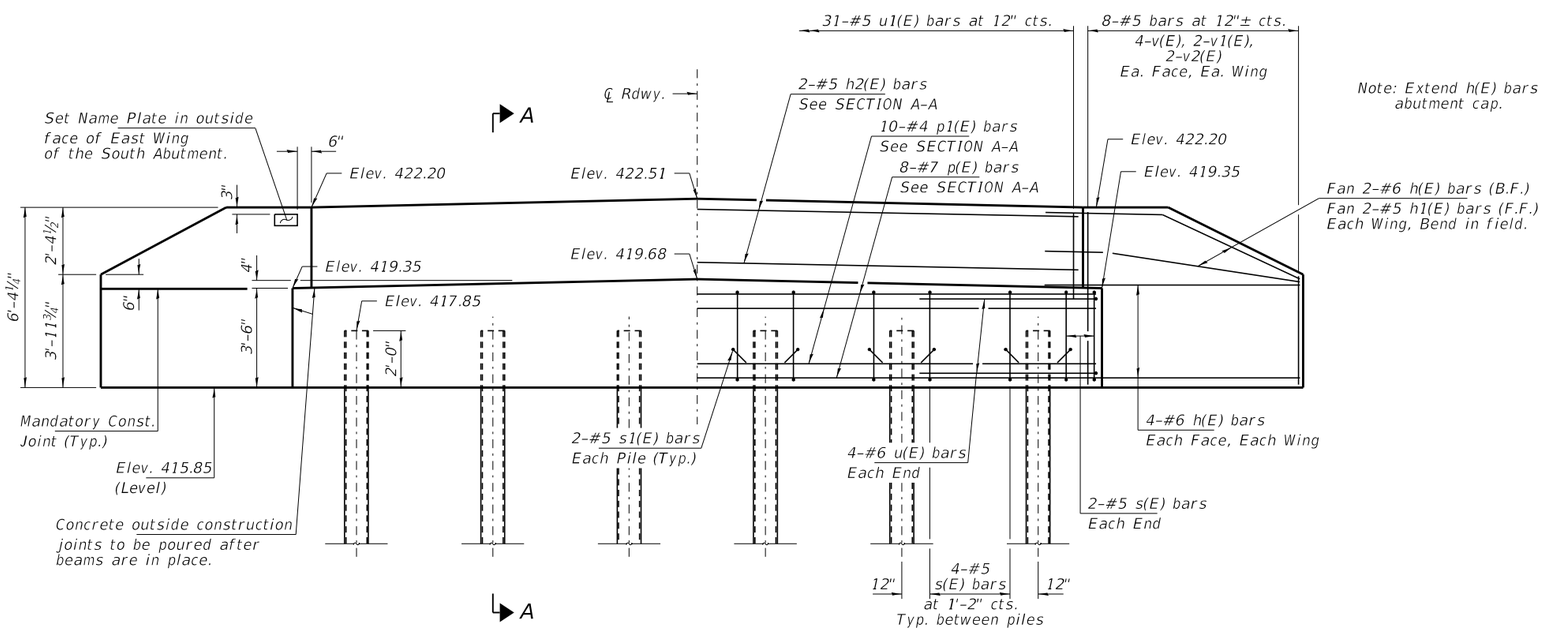

ELEVATION

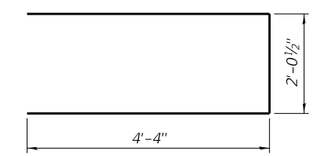

BAR u(E)

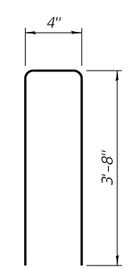

BAR u1(E)

PILE DATA

Type: _____ Steel HP10x42
Nominal Required Bearing: _____ 335 Kips/Pile
Factored Resistance Available: _____ 184 Kips/Pile
Est. Length: _____ 75 Ft/Pile
No. Production Piles: _____ 5
No. Test Piles: _____ 1

Notes: One test pile shall be driven in a permanent location at the South Abutment.

The test pile shall be driven to 110 percent of the Nominal Required Bearing indicated in the pile data information.

BILL OF MATERIAL - S. ABUT.

BAR	NO.	SIZE	LENGTH	SHAPE
h(E)	20	#6	9'-0"	
h1(E)	4	#5	7'-6"	
h2(E)	2	#5	31'-2"	
p(E)	8	#7	31'-2"	
p1(E)	10	#4	31'-2"	
s(E)	24	#5	11'-7"	
s1(E)	12	#5	3'-6"	
u(E)	8	#6	10'-9"	
u1(E)	31	#5	7'-8"	
v(E)	16	#5	5'-9"	
v1(E)	8	#5	4'-9"	
v2(E)	8	#5	3'-8"	
Concrete Structures			Cu. Yd.	15.9
Reinf. Bars, Epoxy Coated			Pound	1,960
Steel Piles HP10x42			Foot	375
Test Pile Steel HP10x42			Each	1
Name Plates			Each	1

FILE NAME = 180572-sht-bridge 33" beam.dgn	USER NAME = rhoslck	DESIGNED - J.R.B.	REVISED -
HAMPTON, LENZINI AND RENWICK, INC. 3085 STEVENSON DRIVE, SUITE 201 SPRINGFIELD, ILLINOIS 62703 ILLINOIS PROFESSIONAL DESIGN FIRM LS / PE / SE CORP. 184.000959		CHECKED - S.W.M.	REVISED -
	PLOT SCALE =	DRAWN - M.M.P.	REVISED -
	PLOT DATE = 11/3/2020	CHECKED - S.W.M.	REVISED -

STATE OF ILLINOIS
LAWRENCE COUNTY HIGHWAY DEPARTMENT

SOUTH ABUTMENT
STRUCTURE NO. 051-3310

SHEET NO. 6 OF 9 SHEETS

F.A.S.	SECTION	COUNTY	TOTAL SHEETS	SHEET NO.
806	18-00122-00-BR	LAWRENCE	29	12
		CONTRACT NO. 95886		
	ILLINOIS	FED. AID PROJECT VFLV(092)		

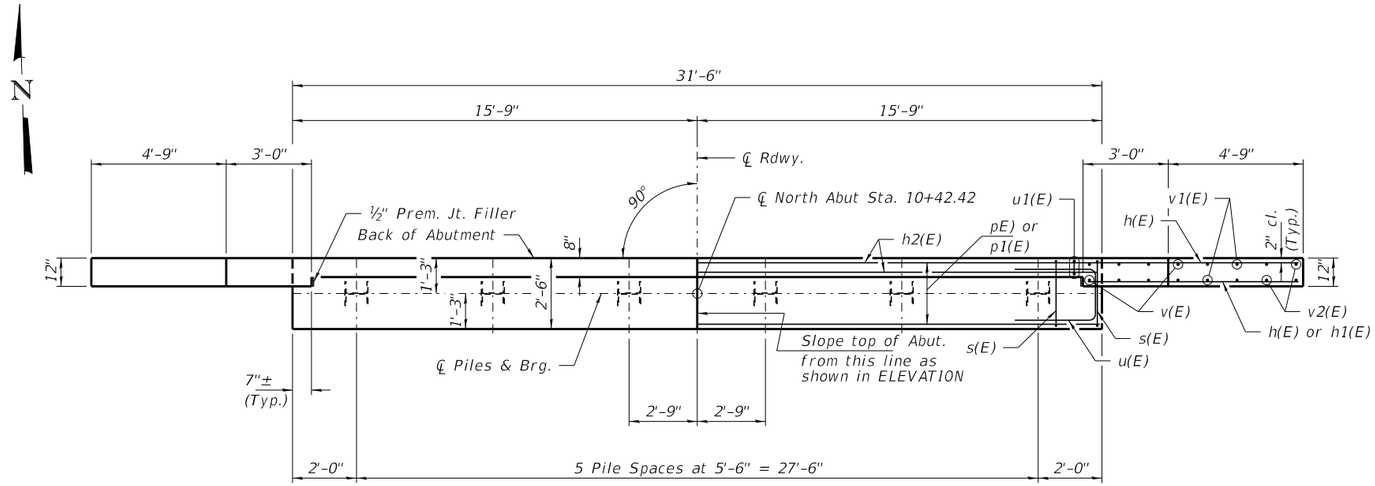

PLAN

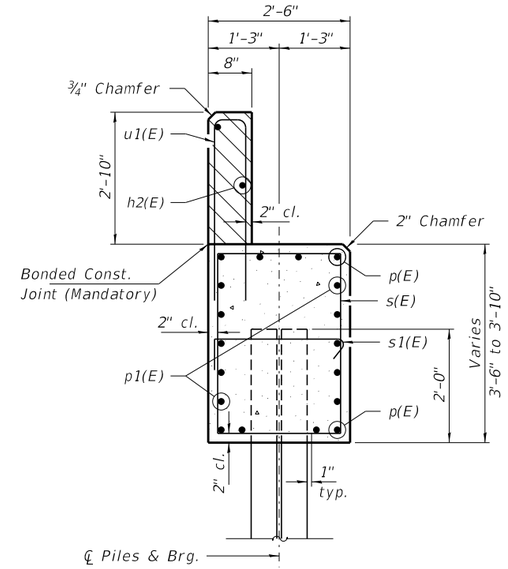

SECTION A-A

Hatched area to be poured after beams are in place.

Cast top of wingwall flush with exterior beam face after beams have been erected.

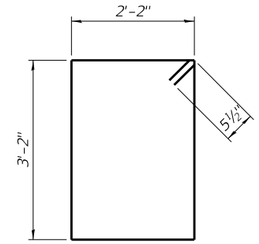

BAR s(E)

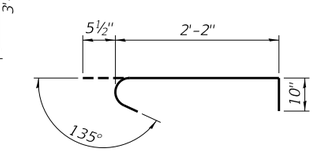

BAR s1(E)

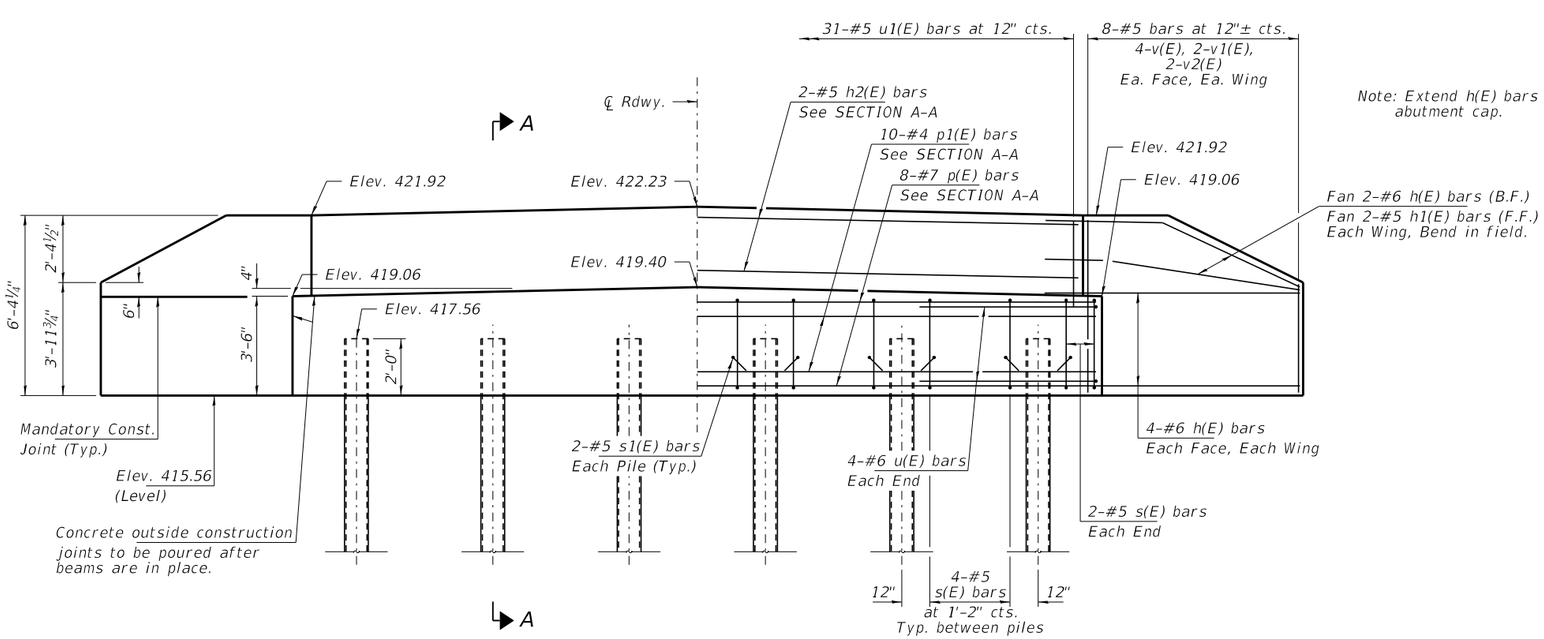

ELEVATION

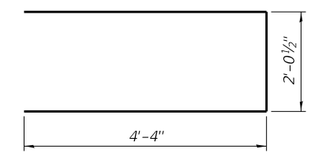

BAR u(E)

PILE DATA

Type: _____ Steel HP10x42
Nominal Required Bearing: _____ 335 Kips/Pile
Factored Resistance Available: _____ 184 Kips/Pile
Est. Length: _____ 75 Ft/Pile
No. Production Piles: _____ 6
No. Test Piles: _____ 0

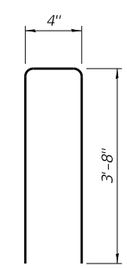

BAR u1(E)

BILL OF MATERIAL - N. ABUT.

BAR	NO.	SIZE	LENGTH	SHAPE
h(E)	20	#6	9'-0"	
h1(E)	4	#5	7'-6"	
h2(E)	2	#5	31'-2"	
p(E)	8	#7	31'-2"	
p1(E)	10	#4	31'-2"	
s(E)	24	#5	11'-7"	
s1(E)	12	#5	3'-6"	
u(E)	8	#6	10'-9"	
u1(E)	31	#5	7'-8"	
v(E)	16	#5	5'-9"	
v1(E)	8	#5	4'-9"	
v2(E)	8	#5	3'-8"	
Concrete Structures			Cu. Yd.	15.9
Reinf. Bars, Epoxy Coated			Pound	1,960
Steel Piles HP10x42			Foot	450

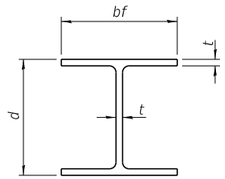

STEEL PILE TABLE

Designation	Depth d	Flange width bf	Web and Flange thickness t	Encasement diameter A
HP 14x117	14¼"	14⅞"	13/16"	30"
x102	14"	14¾"	11/16"	30"
x89	13⅞"	14¾"	⅝"	30"
x73	13⅝"	14⅝"	½"	30"
HP 12x84	12¼"	12¼"	11/16"	24"
x74	12⅛"	12¼"	⅝"	24"
x63	12"	12⅛"	½"	24"
x53	11¾"	12"	7/16"	24"
HP 10x57	10"	10¼"	9/16"	24"
x42	9¾"	10⅛"	7/16"	24"
HP 8x36	8"	8⅛"	7/16"	18"

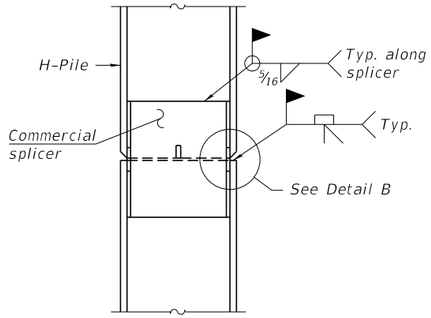

ELEVATION

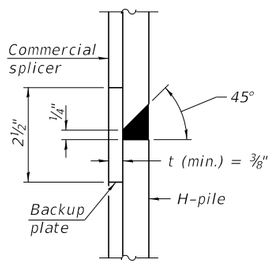

DETAIL "B"

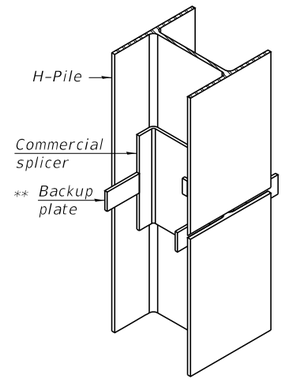

ISOMETRIC VIEW

WELDED COMMERCIAL SPLICE

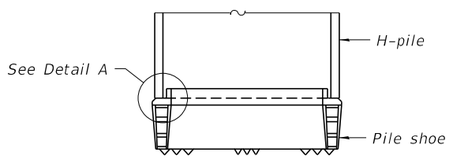

ELEVATION

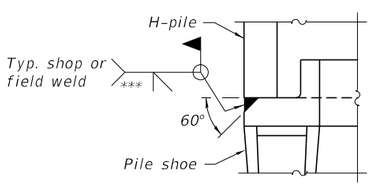

DETAIL A

SHOE ATTACHMENT

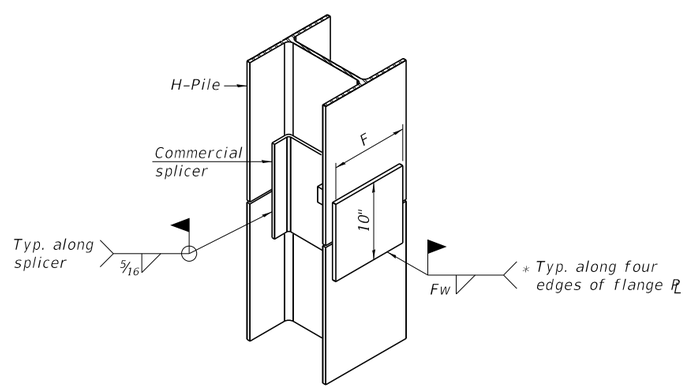

ISOMETRIC VIEW

WELDED COMMERCIAL SPLICE ALTERNATE

Note:
The steel H-piles shall be according to AASHTO M270 Grade 50.

* Interrupt welds ¼" from end of web and/or each flange.

** Remove portions of backup plates that extend outside the flanges.

*** Weld size per pile shoe manufacturer (5/16" min.).

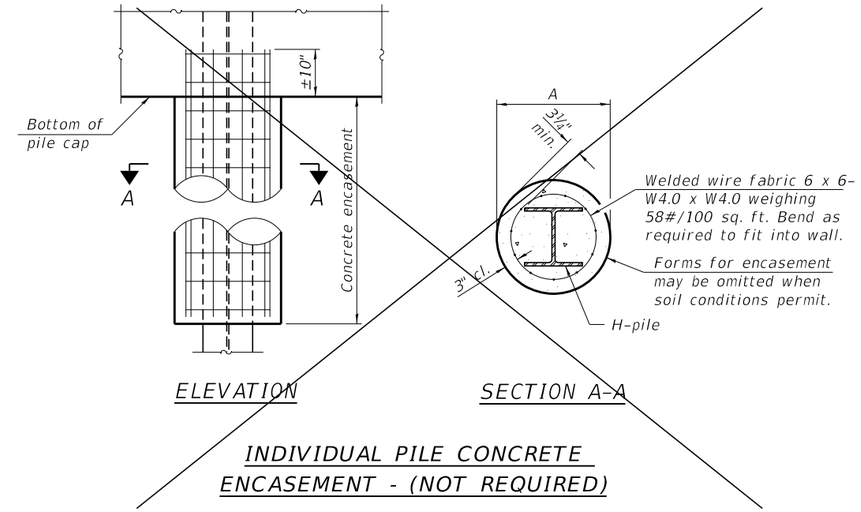

ELEVATION

SECTION A-A

INDIVIDUAL PILE CONCRETE ENCASEMENT - (NOT REQUIRED)

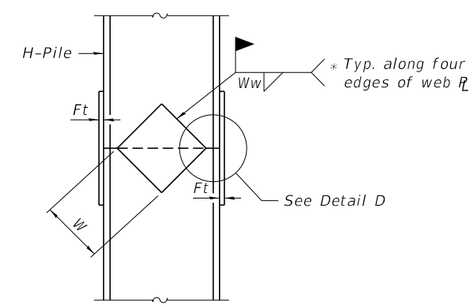

ELEVATION

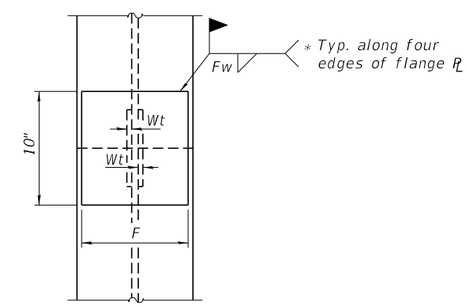

END VIEW

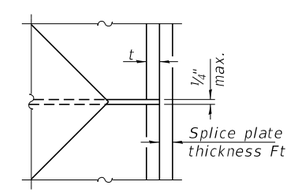

DETAIL D

Designation	F	Ft	Fw	W	Wt	Ww
HP 14x117	12½"	1"	⅞"	7¾"	⅝"	½"
x102	12½"	⅞"	¾"	7¾"	⅝"	½"
x89	12½"	¾"	11/16"	7¾"	⅝"	½"
x73	12½"	⅝"	9/16"	7¾"	⅝"	½"
HP 12x84	10"	⅞"	11/16"	6½"	⅝"	½"
x74	10"	⅞"	11/16"	6½"	⅝"	½"
x63	10"	⅝"	½"	6½"	½"	⅜"
x53	10"	⅝"	½"	6½"	½"	⅜"
HP 10x57	8"	¾"	9/16"	5¼"	½"	⅜"
x42	8"	⅝"	9/16"	5¼"	½"	⅜"
HP 8x36	7"	⅝"	7/16"	4¼"	½"	⅜"

WELDED PLATE FIELD SPLICE

F-HP 1-1-2020

FILE NAME = 180572-shl-bridge 33" beam.dgn	USER NAME = rhoslck	DESIGNED - J.R.B.	REVISED -
HAMPTON, LENZINI AND RENWICK, INC. 3085 STEVENSON DRIVE, SUITE 201 SPRINGFIELD, ILLINOIS 62703		CHECKED - S.W.M.	REVISED -
ILLINOIS PROFESSIONAL DESIGN FIRM LS / PE / SE CORP. 184.000959	PLOT SCALE =	DRAWN - M.M.P.	REVISED -
	PLOT DATE = 11/3/2020	CHECKED - S.W.M.	REVISED -

STATE OF ILLINOIS
LAWRENCE COUNTY HIGHWAY DEPARTMENT

HP PILE DETAILS
STRUCTURE NO. 051-3310

SHEET NO. 8 OF 9 SHEETS

F.A.S.	SECTION	COUNTY	TOTAL SHEETS	SHEET NO.
806	18-00122-00-BR	LAWRENCE	29	14
		CONTRACT NO. 95886		
		ILLINOIS	FED. AID PROJECT VFLV(092)	

HOLCOMB FOUNDATION ENGINEERING INC.
393 Wood Road 618-529-5262
Carbondale, Il. 62901 618-457-8991 fax

Bridge Foundation Boring Log

Project: H-18282 Bridge Bridgeport Road over Raccoon Creek Date: 1/3/2019
Section: 18-00122-00-BR Station
Structure:
County: Lawrence
Bored by: D. Russell
Checked By: T. Holcomb

Boring No: 1
Station:
Offset:

Surface Water Elev.
Ground Water Elev.
During Drilling 390.8 69.6 plugged @
Upon Completion 396.8 75.6

Description	Elevation	N	Qu tsf	w %
Ground Surface 420.8 99.6	0			
Brown Silty CLAY (A-6)				
		10	1.8S	24
417.3 96.1				
Crushed Stone				
	-5	14	--	9
414.8 93.6				
Gray Silty CLAY (A-6)				
		5	1.5S	21
	-10	3	0.9B	25
409.8 88.6				
Brown Mottled Gray Silty CLAY (A-6)				
		7	2.1B	22
	-15	7	1.8S	22
402.3 81.1				
Gray Silty CLAY (A-6) w/sand				
		5	1.4S	24
	-20	4	0.6B	23
		4	--	45
silty clay w/sand (continued)				
	-25	4	0.5S	34
		3	0.7B	45
	-30	3	1.1B	29
	-35	4	1.6B	21
	-40	12	2.9B	21

N = Standard Penetration Test Blows per foot to drive 2" O.D. Split Spoon Sampler 12" with a 140 lbs. hammer falling 30"
Qu-Unconfined Compressive Strength in tons/sq.ft. w-Water Content-percentage of oven dry weight-%
B = Bulge Failure S = Shear Failure E = Estimated Value P = Penetrometer

HOLCOMB FOUNDATION ENGINEERING INC.
393 Wood Road 618-529-5262
Carbondale, Il. 62901 618-457-8991 fax

Bridge Foundation Boring Log

Project: H-18282 Bridge Bridgeport Road over Raccoon Creek Date: 1/3/2019
Section: 18-00122-00-BR Station
Structure:
County: Lawrence
Bored by: D. Russell
Checked By: T. Holcomb

Boring No: 1
Station:
Offset:

Surface Water Elev.
Ground Water Elev.
During Drilling 390.8 69.6 plugged @
Upon Completion 396.8 75.6

Description	Elevation	N	Qu tsf	w %
silty clay w/sand (continued)				
	-45	0	--	23
372.3 51.1				
Gray SAND (A-2-4)				
	-50	18	--	25
	-55	27	1.3S	16
362.3 41.1				
Gray Sandy CLAY (A-6)				
	-60	10	--	16
357.3 36.1				
Gray Sandy to Silty CLAY (A-6)				
	-65	28	0.5S	16
352.3 31.1				
Dark Brown CLAY (A-6) 30.6 351.8				
Coal Seam 31.1 352.3				
Dark Brown CLAY (A-6)	-70	42	2.6S	17
347.3 26.1				
Gray SHALE		100/6"	1.7S	11
	-75			
		100/5"	2.6S	11
341.8 20.6		100/3"	1.4S	12
End of Boring @ -79.0'	-80			
	-85			

N = Standard Penetration Test Blows per foot to drive 2" O.D. Split Spoon Sampler 12" with a 140 lbs. hammer falling 30"
Qu-Unconfined Compressive Strength in tons/sq.ft. w-Water Content-percentage of oven dry weight-%
B = Bulge Failure S = Shear Failure E = Estimated Value P = Penetrometer

BORING 1

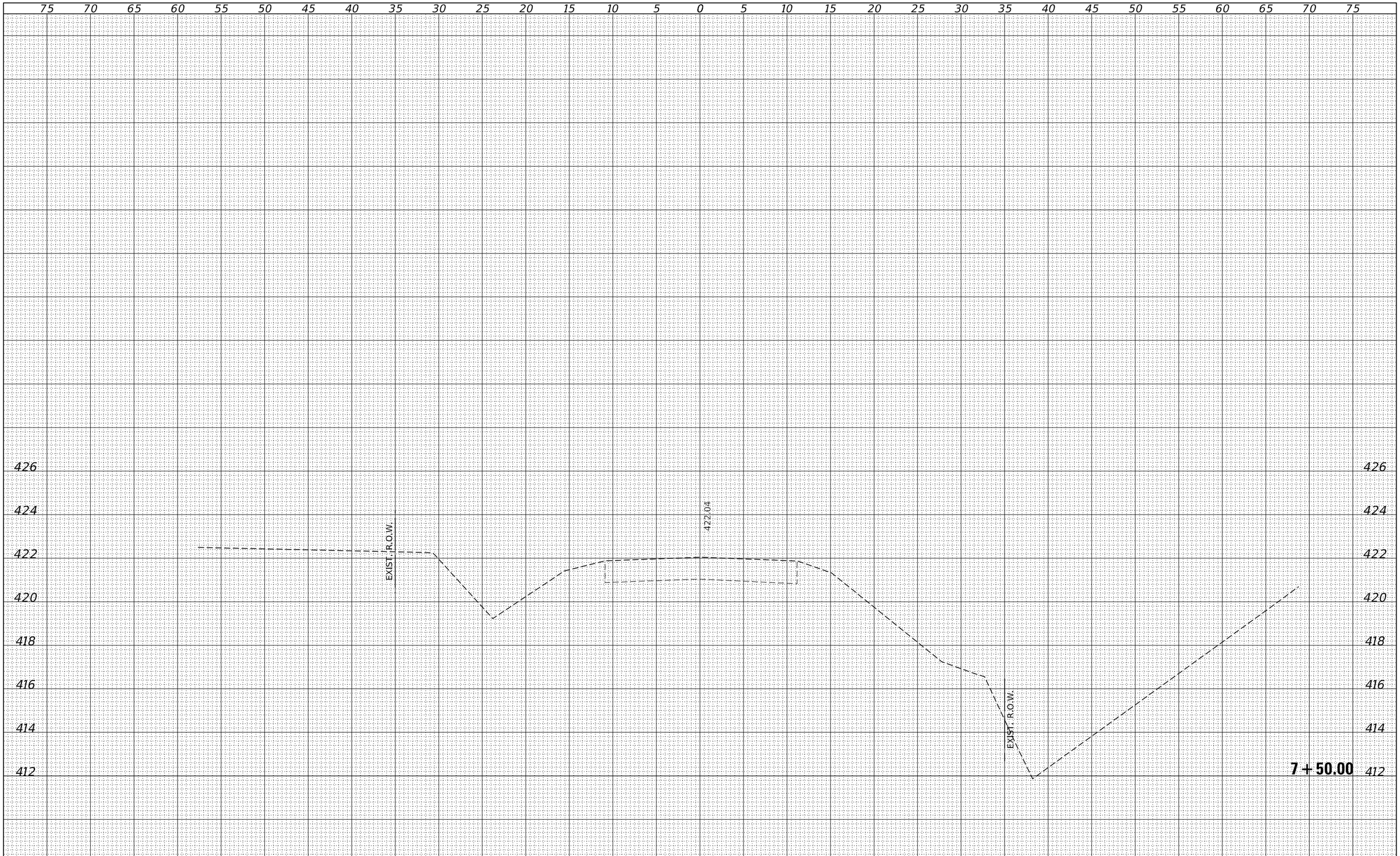

FINAL SURVEY		BY	DATE
NOTE BOOK	SURVEYED		
	PLOTTED		
	TEMPLATE		
	AREAS		
NO.	AREAS CHECKED		

ORIGINAL SURVEY		BY	DATE
NOTE BOOK	SURVEYED		
	PLOTTED		
	TEMPLATE		
	AREAS		
NO.	AREAS CHECKED		

FILE NAME = 180572-sht-xssheets.dgn	USER NAME = rhoskk	DESIGNED - J.W.F.	REVISED -
HAMPTON, LENZINI AND RENWICK, INC. 3085 STEVENSON DRIVE, SUITE 201 SPRINGFIELD, ILLINOIS 62703 ILLINOIS PROFESSIONAL DESIGN FIRM LS / PE / SE CORP. 184.000959		DRAWN - T.W.K.	REVISED -
	PLOT SCALE = $SCALE$	CHECKED - S.W.M.	REVISED -
	PLOT DATE = 11/3/2020	DATE - 11/03/2020	REVISED -

STATE OF ILLINOIS
LAWRENCE COUNTY HIGHWAY DEPARTMENT

STATION CROSS SECTIONS

SCALE: 5H:2V | SHEET NO. 1 OF 14 SHEETS | STA. 7+50.00 TO STA. 7+50.00

F.A.S.	SECTION	COUNTY	TOTAL SHEETS	SHEET NO.
806	18-00122-00-BR	LAWRENCE	29	16
		CONTRACT NO. 95886		
		ILLINOIS	FED. AID PROJECT VFL2(092)	

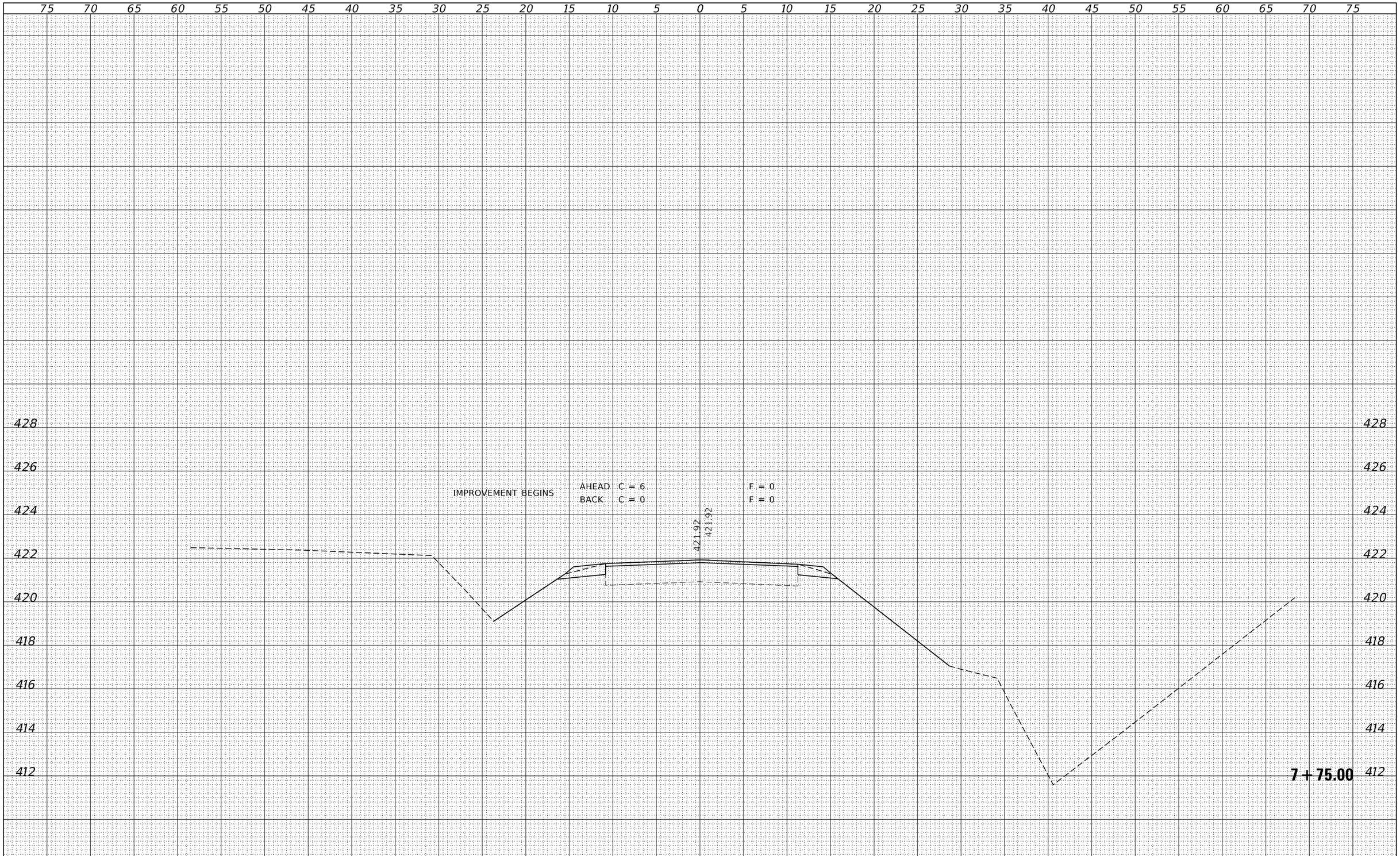

FINAL SURVEY		BY	DATE
NOTE BOOK	SURVEYED		
	PLOTTED		
	TEMPLATE		
	AREAS		
NO.	AREAS CHECKED		

ORIGINAL SURVEY		BY	DATE
NOTE BOOK	SURVEYED		
	PLOTTED		
	TEMPLATE		
	AREAS		
NO.	AREAS CHECKED		

FILE NAME = 180572-sht-xssheets.dgn
USER NAME = rhoskk
PLOT SCALE = $SCALE$
PLOT DATE = 11/3/2020

DESIGNED - J.W.F.
DRAWN - T.W.K.
CHECKED - S.W.M.
DATE - 11/03/2020

REVISED -
REVISED -
REVISED -
REVISED -

HAMPTON, LENZINI AND RENWICK, INC.
3085 STEVENSON DRIVE, SUITE 201
SPRINGFIELD, ILLINOIS 62703
ILLINOIS PROFESSIONAL DESIGN FIRM
LS / PE / SE CORP. 184.000959

STATE OF ILLINOIS
LAWRENCE COUNTY HIGHWAY DEPARTMENT

STATION CROSS SECTIONS

SCALE: 5H:2V | SHEET NO. 2 OF 14 SHEETS | STA. 7+75.00 TO STA. 7+75.00

F.A.S.	SECTION	COUNTY	TOTAL SHEETS	SHEET NO.
806	18-00122-00-BR	LAWRENCE	29	17

CONTRACT NO. 95886

ILLINOIS | FED. AID PROJECT VFL2(092)

FINAL SURVEY		BY	DATE
NOTE BOOK	SURVEYED		
	PLOTTED		
	TEMPLATE		
	AREAS		
NO.	AREAS CHECKED		

ORIGINAL SURVEY		BY	DATE
NOTE BOOK	SURVEYED		
	PLOTTED		
	TEMPLATE		
	AREAS		
NO.	AREAS CHECKED		

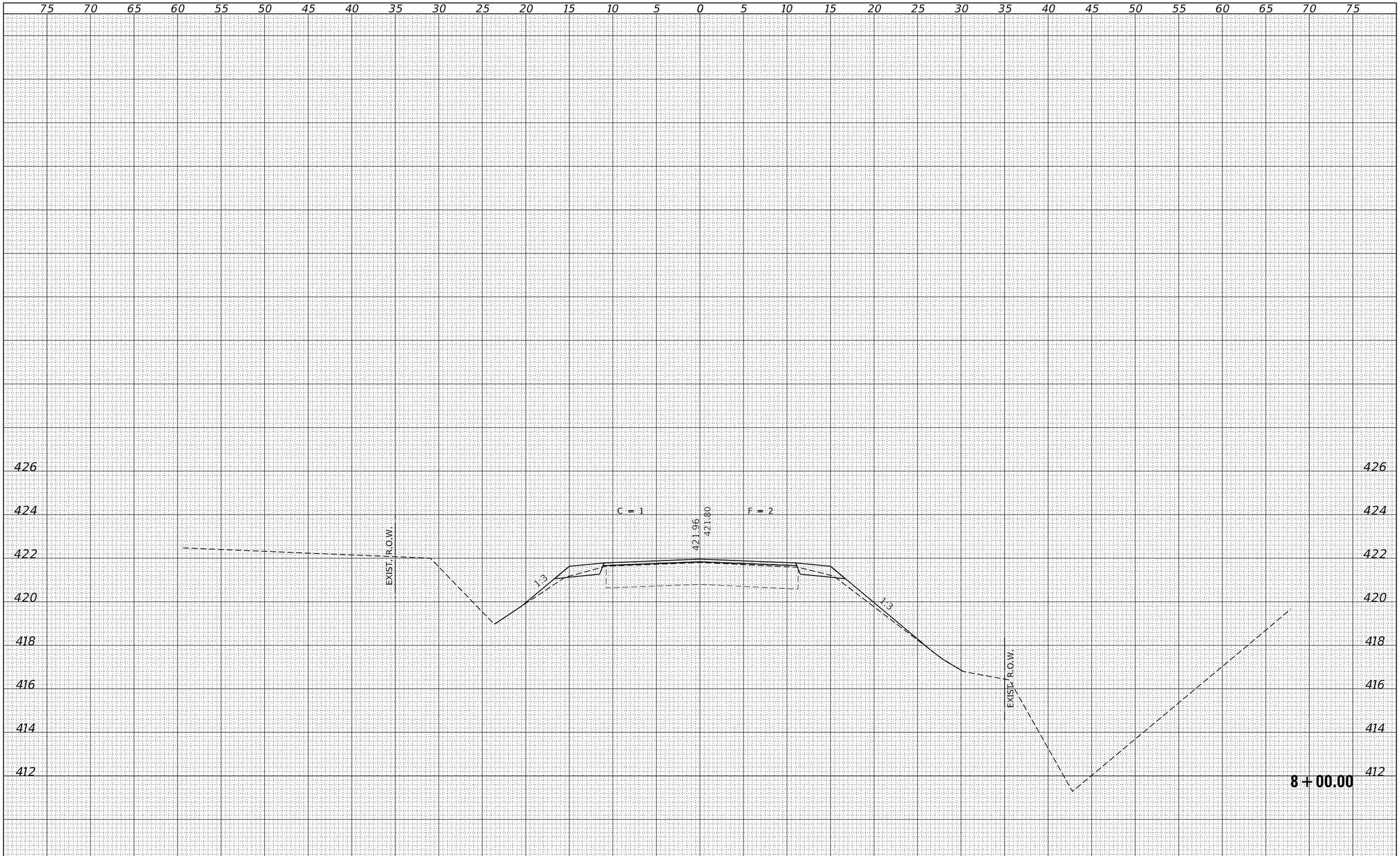

FILE NAME = 180572-sht-xssheets.dgn	USER NAME = rhoskk	DESIGNED - J.W.F.	REVISED -
HAMPTON, LENZINI AND RENWICK, INC. 3085 STEVENSON DRIVE, SUITE 201 SPRINGFIELD, ILLINOIS 62703 ILLINOIS PROFESSIONAL DESIGN FIRM LS / PE / SE CORP. 184.000959		DRAWN - T.W.K.	REVISED -
	PLOT SCALE = $SCALE$	CHECKED - S.W.M.	REVISED -
	PLOT DATE = 11/3/2020	DATE - 11/03/2020	REVISED -

STATE OF ILLINOIS
LAWRENCE COUNTY HIGHWAY DEPARTMENT

STATION CROSS SECTIONS

SCALE: 5H:2V | SHEET NO. 3 OF 14 SHEETS | STA. 8+00.00 TO STA. 8+00.00

F.A.S.	SECTION	COUNTY	TOTAL SHEETS	SHEET NO.
806	18-00122-00-BR	LAWRENCE	29	18
		CONTRACT NO. 95886		
		ILLINOIS	FED. AID PROJECT VFL2(092)	

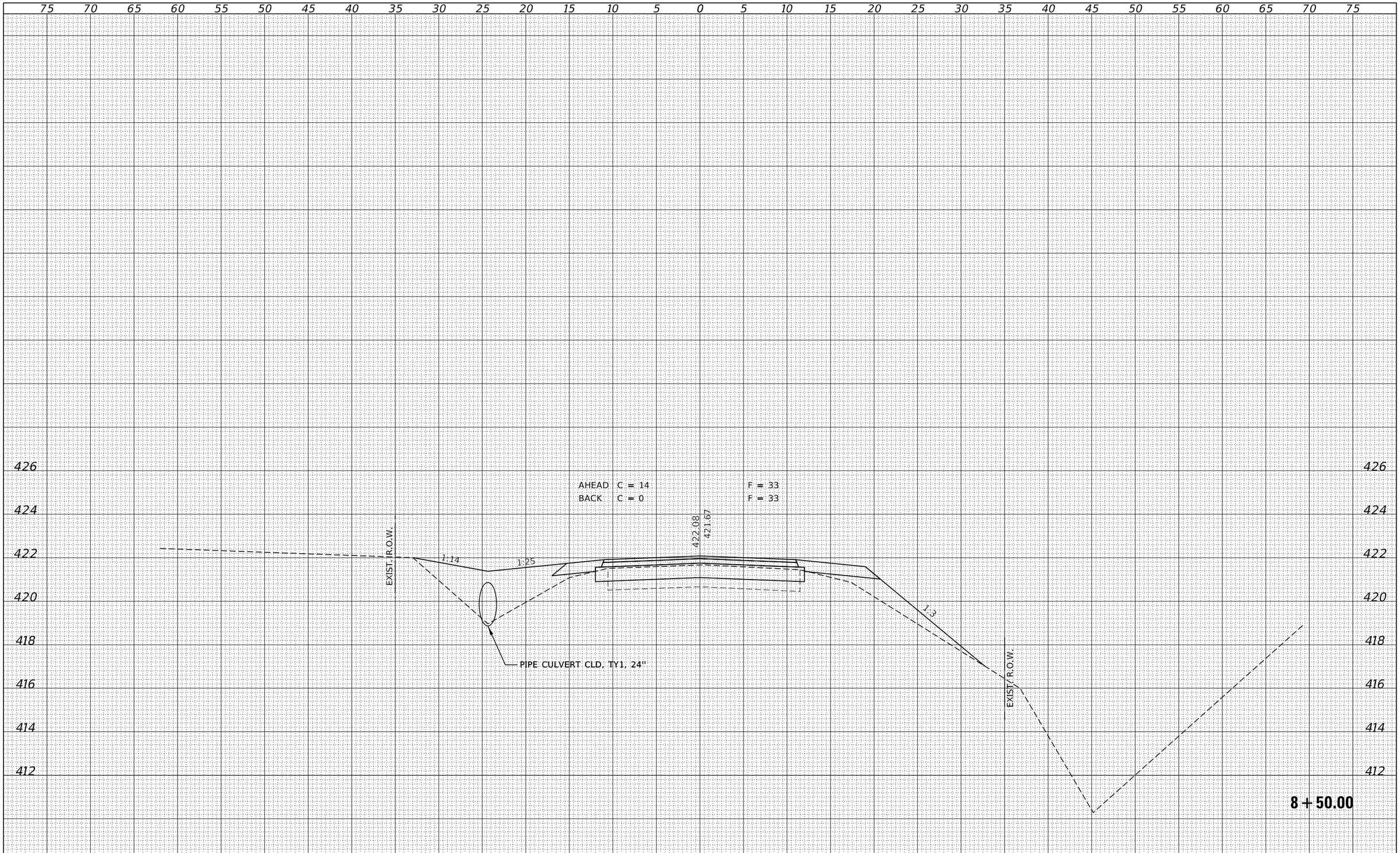

FINAL SURVEY		BY	DATE
NOTE BOOK	SURVEYED		
	PLOTTED		
	TEMPLATE		
	AREAS		
NO.	AREAS CHECKED		

ORIGINAL SURVEY		BY	DATE
NOTE BOOK	SURVEYED		
	PLOTTED		
	TEMPLATE		
	AREAS		
NO.	AREAS CHECKED		

FILE NAME = 180572-sht-xssheets.dgn	USER NAME = rhoskk	DESIGNED - J.W.F.	REVISED -
HAMPTON, LENZINI AND RENWICK, INC. 3085 STEVENSON DRIVE, SUITE 201 SPRINGFIELD, ILLINOIS 62703 ILLINOIS PROFESSIONAL DESIGN FIRM LS / PE / SE CORP. 184.000959		DRAWN - T.W.K.	REVISED -
	PLOT SCALE = $SCALE$	CHECKED - S.W.M.	REVISED -
	PLOT DATE = 11/3/2020	DATE - 11/03/2020	REVISED -

STATE OF ILLINOIS
LAWRENCE COUNTY HIGHWAY DEPARTMENT

STATION CROSS SECTIONS

SCALE: 5H:2V | SHEET NO. 4 OF 14 SHEETS | STA. 8+50.00 TO STA. 8+50.00

F.A.S.	SECTION	COUNTY	TOTAL SHEETS	SHEET NO.
806	18-00122-00-BR	LAWRENCE	29	19
		CONTRACT NO. 95886		
		ILLINOIS	FED. AID PROJECT VFL2(092)	

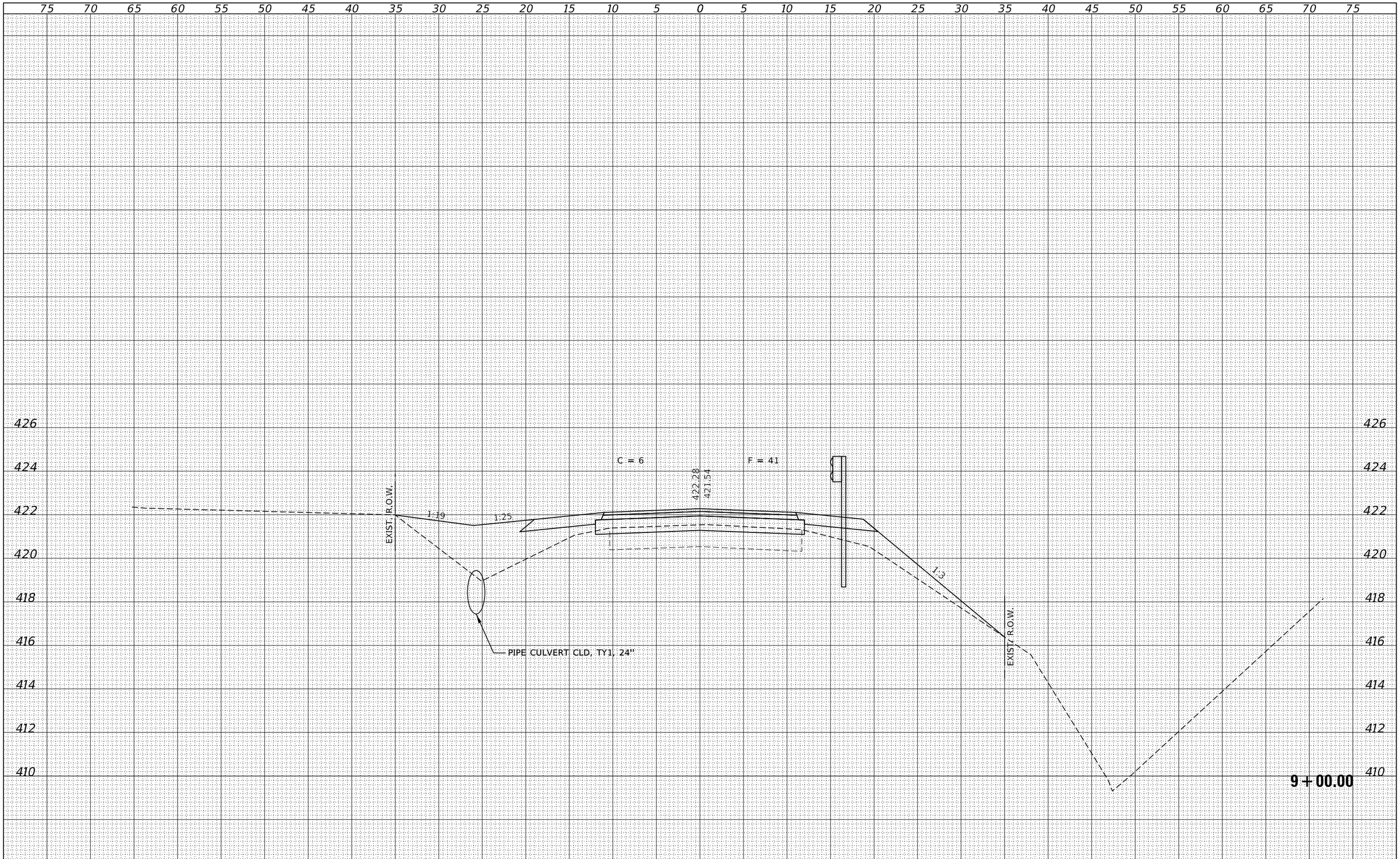

FINAL SURVEY		BY	DATE
NOTE BOOK	SURVEYED		
	PLOTTED		
	TEMPLATE		
	AREAS		
NO.	AREAS CHECKED		

ORIGINAL SURVEY		BY	DATE
NOTE BOOK	SURVEYED		
	PLOTTED		
	TEMPLATE		
	AREAS		
NO.	AREAS CHECKED		

FILE NAME = 180572-sht-xssheets.dgn	USER NAME = rhoskk	DESIGNED - J.W.F.	REVISED -
HAMPTON, LENZINI AND RENWICK, INC. 3085 STEVENSON DRIVE, SUITE 201 SPRINGFIELD, ILLINOIS 62703 ILLINOIS PROFESSIONAL DESIGN FIRM LS / PE / SE CORP. 184.000959		DRAWN - T.W.K.	REVISED -
	PLOT SCALE = $SCALE$	CHECKED - S.W.M.	REVISED -
	PLOT DATE = 11/3/2020	DATE - 11/03/2020	REVISED -

STATE OF ILLINOIS
LAWRENCE COUNTY HIGHWAY DEPARTMENT

STATION CROSS SECTIONS

SCALE: 5H:2V | SHEET NO. 5 OF 14 SHEETS | STA. 9+00.00 TO STA. 9+00.00

F.A.S.	SECTION	COUNTY	TOTAL SHEETS	SHEET NO.
806	18-00122-00-BR	LAWRENCE	29	20
		CONTRACT NO. 95886		
		ILLINOIS	FED. AID PROJECT VFL2(092)	

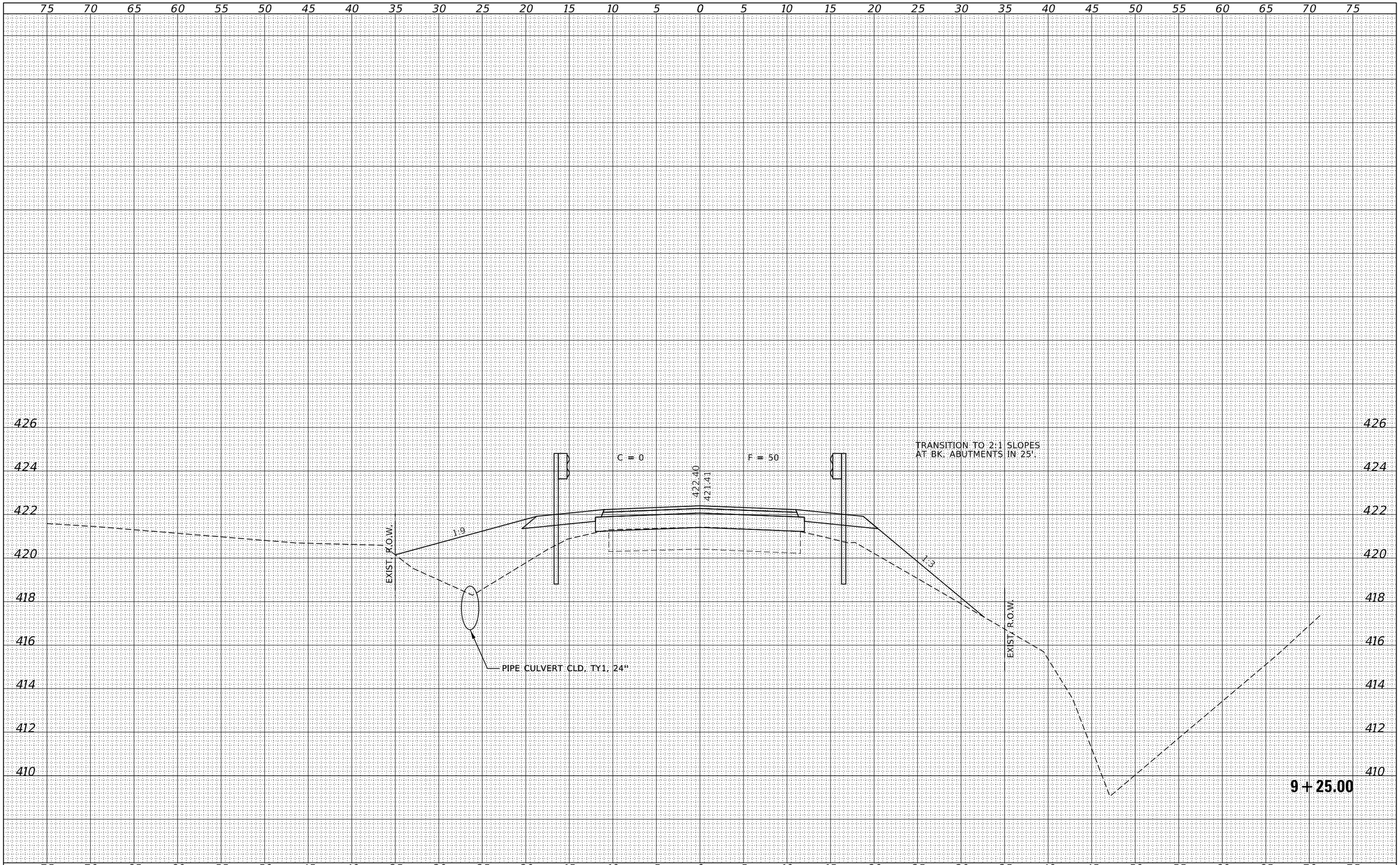

FINAL SURVEY		BY	DATE
NOTE BOOK	SURVEYED		
	PLOTTED		
	TEMPLATE		
	AREAS		
	AREAS CHECKED		
NO.			

ORIGINAL SURVEY		BY	DATE
NOTE BOOK	SURVEYED		
	PLOTTED		
	TEMPLATE		
	AREAS		
	AREAS CHECKED		
NO.			

FILE NAME = 180572-sht-xssheets.dgn	USER NAME = rhoskk	DESIGNED - J.W.F.	REVISED -
HAMPTON, LENZINI AND RENWICK, INC. 3085 STEVENSON DRIVE, SUITE 201 SPRINGFIELD, ILLINOIS 62703		DRAWN - T.W.K.	REVISED -
ILLINOIS PROFESSIONAL DESIGN FIRM LS / PE / SE CORP. 184.000959	PLOT SCALE = $SCALE$	CHECKED - S.W.M.	REVISED -
	PLOT DATE = 11/3/2020	DATE - 11/03/2020	REVISED -

STATE OF ILLINOIS
LAWRENCE COUNTY HIGHWAY DEPARTMENT

STATION CROSS SECTIONS

SCALE: 5H:2V | SHEET NO. 6 OF 14 SHEETS | STA. 9+25.00 TO STA. 9+25.00

F.A.S.	SECTION	COUNTY	TOTAL SHEETS	SHEET NO.
806	18-00122-00-BR	LAWRENCE	29	21
		CONTRACT NO. 95886		
		ILLINOIS	FED. AID PROJECT VFL2(092)	

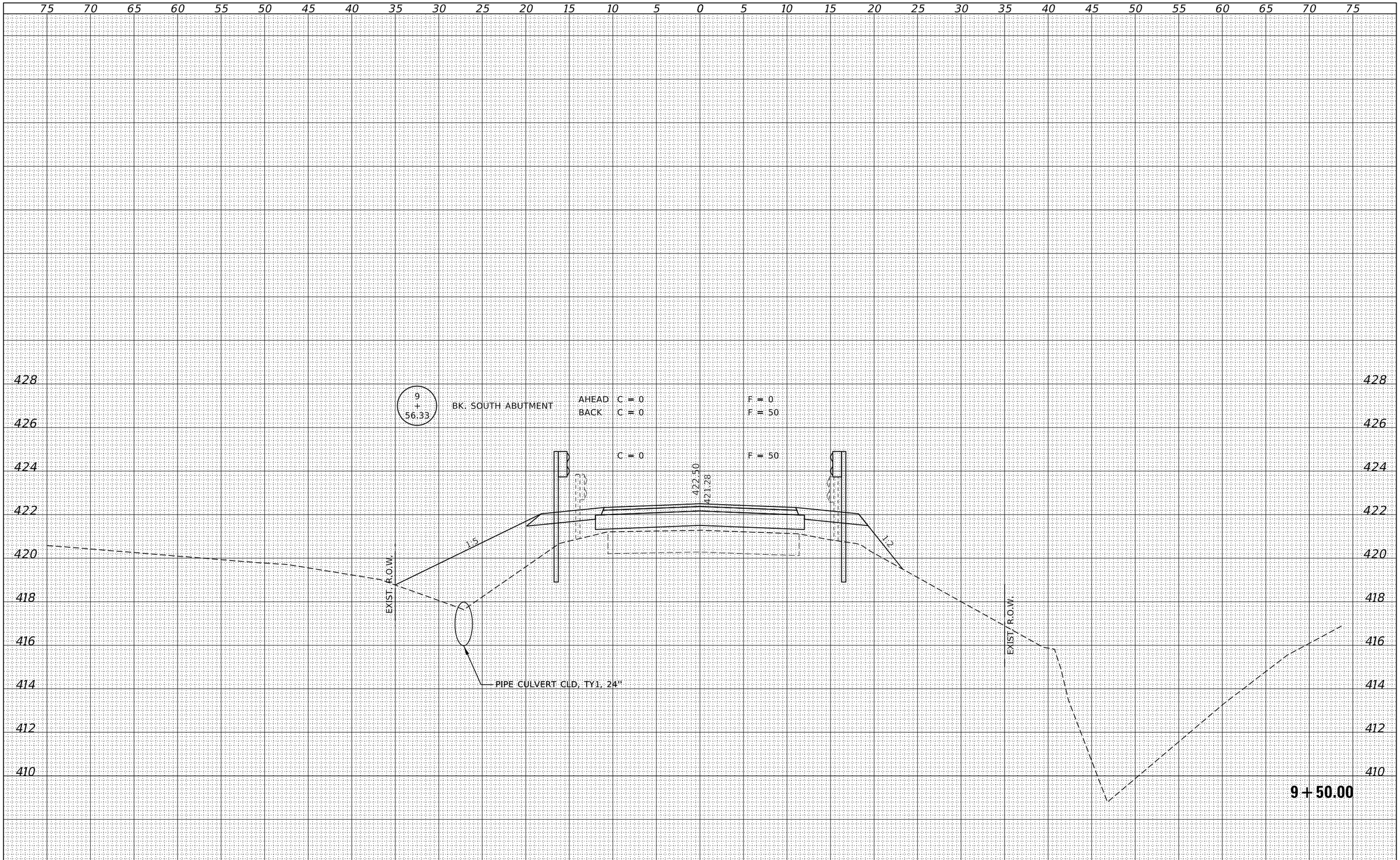

FINAL SURVEY		BY	DATE
NOTE BOOK	SURVEYED		
	PLOTTED		
	TEMPLATE		
	AREAS		
	AREAS CHECKED		
NO.			

ORIGINAL SURVEY		BY	DATE
NOTE BOOK	SURVEYED		
	PLOTTED		
	TEMPLATE		
	AREAS		
	AREAS CHECKED		
NO.			

FILE NAME = 180572-sht-xssheets.dgn
USER NAME = rhoskk
PLOT SCALE = $SCALE$
PLOT DATE = 11/3/2020

DESIGNED - J.W.F.
DRAWN - T.W.K.
CHECKED - S.W.M.
DATE - 11/03/2020

REVISED -
REVISED -
REVISED -
REVISED -

HAMPTON, LENZINI AND RENWICK, INC.
3085 STEVENSON DRIVE, SUITE 201
SPRINGFIELD, ILLINOIS 62703
ILLINOIS PROFESSIONAL DESIGN FIRM
LS / PE / SE CORP. 184.000959

STATE OF ILLINOIS
LAWRENCE COUNTY HIGHWAY DEPARTMENT

STATION CROSS SECTIONS

SCALE: 5H:2V | SHEET NO. 7 OF 14 SHEETS | STA. 9+50.00 TO STA. 9+50.00

F.A.S.	SECTION	COUNTY	TOTAL SHEETS	SHEET NO.
806	18-00122-00-BR	LAWRENCE	29	22

CONTRACT NO. 95886

ILLINOIS | FED. AID PROJECT VFL2(092)

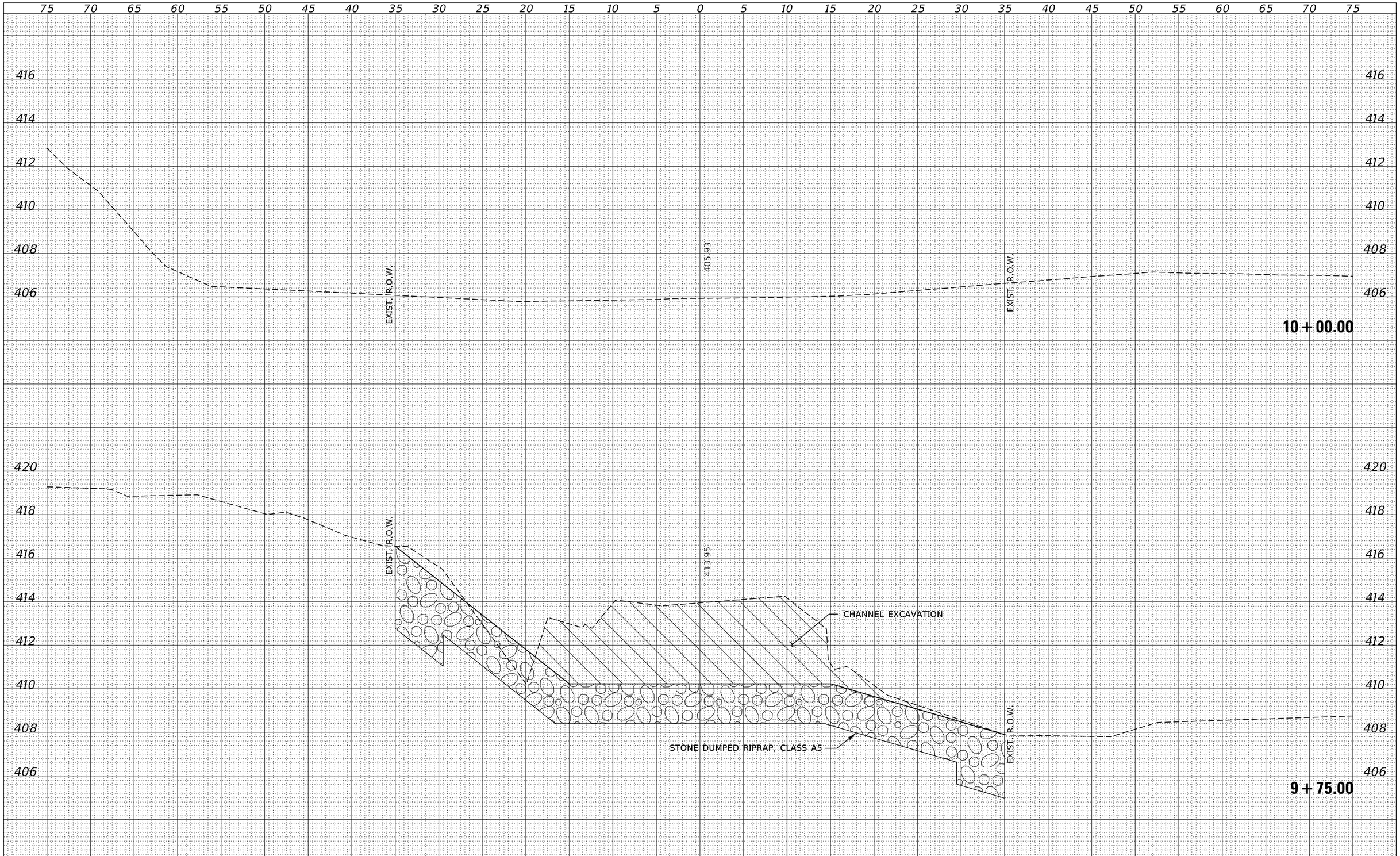

FINAL SURVEY		BY	DATE
NOTE BOOK	SURVEYED		
	PLOTTED		
	TEMPLATE		
	AREAS		
	AREAS CHECKED		
NO.			

ORIGINAL SURVEY		BY	DATE
NOTE BOOK	SURVEYED		
	PLOTTED		
	TEMPLATE		
	AREAS		
	AREAS CHECKED		
NO.			

FILE NAME = 180572-sht-xssheets.dgn	USER NAME = rhoskk	DESIGNED - J.W.F.	REVISED -
HAMPTON, LENZINI AND RENWICK, INC. 3085 STEVENSON DRIVE, SUITE 201 SPRINGFIELD, ILLINOIS 62703 ILLINOIS PROFESSIONAL DESIGN FIRM LS / PE / SE CORP. 184.000959		DRAWN - T.W.K.	REVISED -
	PLOT SCALE = $SCALE$	CHECKED - S.W.M.	REVISED -
	PLOT DATE = 11/3/2020	DATE - 11/03/2020	REVISED -

STATE OF ILLINOIS
LAWRENCE COUNTY HIGHWAY DEPARTMENT

STATION CROSS SECTIONS

SCALE: 5H:2V | SHEET NO. 8 OF 14 SHEETS | STA. 9+75.00 TO STA. 10+00.00

F.A.S.	SECTION	COUNTY	TOTAL SHEETS	SHEET NO.
806	18-00122-00-BR	LAWRENCE	29	23
		CONTRACT NO. 95886		
		ILLINOIS	FED. AID PROJECT VFL2(092)	

FINAL SURVEY		BY	DATE
	SURVEYED		
	PLOTTED		
	TEMPLATE		
NOTE BOOK	AREAS		
	AREAS		
NO.	AREAS CHECKED		

ORIGINAL SURVEY		BY	DATE
	SURVEYED		
	PLOTTED		
	TEMPLATE		
NOTE BOOK	AREAS		
	AREAS		
NO.	AREAS CHECKED		

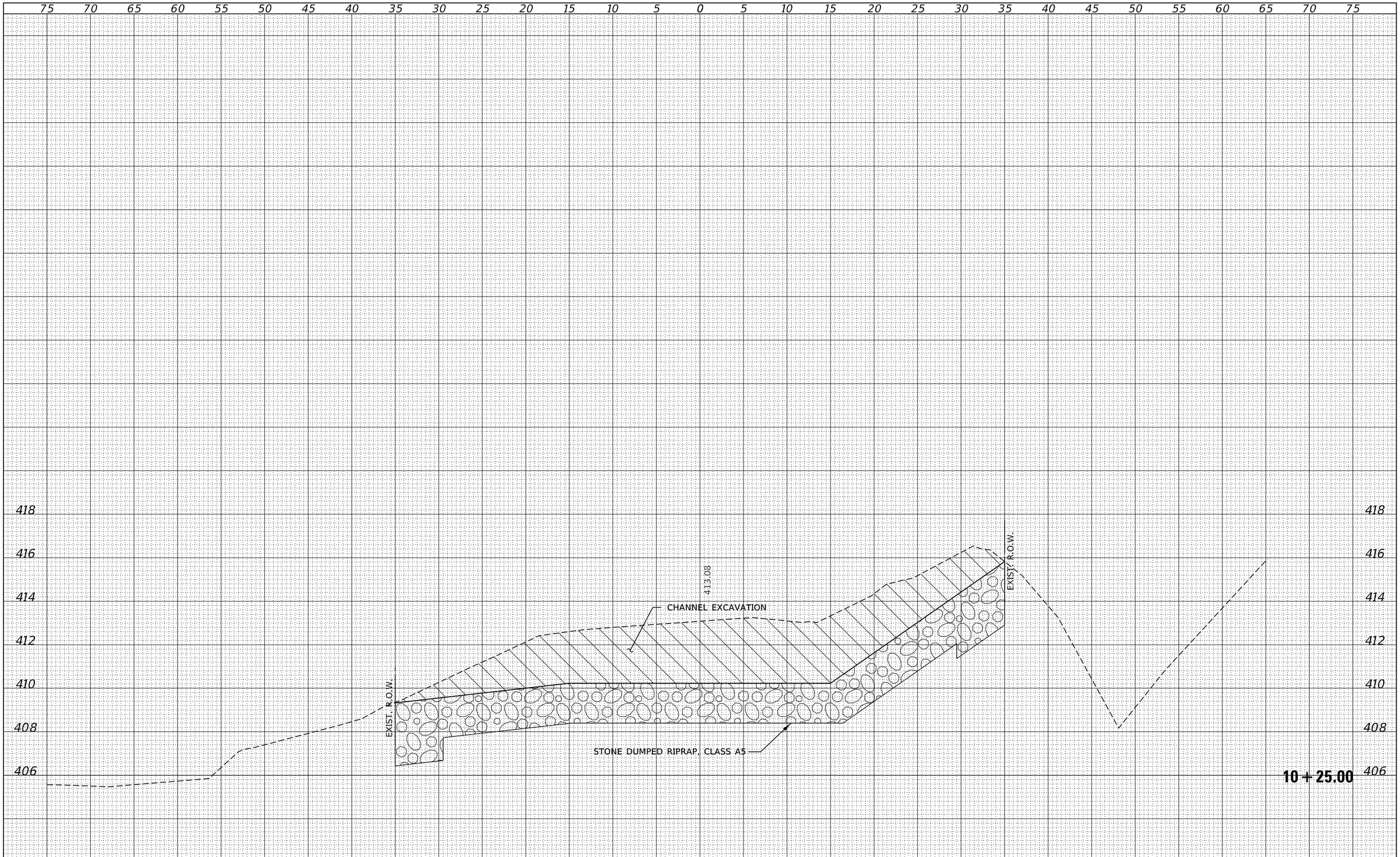

FILE NAME = 180572-sht-xssheets.dgn	USER NAME = rhoslck	DESIGNED - J.W.F.	REVISED -
HAMPTON, LENZINI AND RENWICK, INC. 3085 STEVENSON DRIVE, SUITE 201 SPRINGFIELD, ILLINOIS 62703		DRAWN - T.W.K.	REVISED -
ILLINOIS PROFESSIONAL DESIGN FIRM LS / PE / SE CORP. 184.000959	PLOT SCALE = $SCALE$	CHECKED - S.W.M.	REVISED -
	PLOT DATE = 11/3/2020	DATE - 11/03/2020	REVISED -

STATE OF ILLINOIS
LAWRENCE COUNTY HIGHWAY DEPARTMENT

STATION CROSS SECTIONS

SCALE: 5H:2V | SHEET NO. 9 OF 14 SHEETS | STA. 10+25.00 TO STA. 10+25.00

F.A.S.	SECTION	COUNTY	TOTAL SHEETS	SHEET NO.
806	18-00122-00-BR	LAWRENCE	29	24

CONTRACT NO. 95886

ILLINOIS | FED. AID PROJECT VFL2(092)

FINAL SURVEY		BY	DATE
NOTE BOOK NO.	SURVEYED		
	PLOTTED		
	TEMPLATE		
	AREAS		
	AREAS CHECKED		

ORIGINAL SURVEY		BY	DATE
NOTE BOOK NO.	SURVEYED		
	PLOTTED		
	TEMPLATE		
	AREAS		
	AREAS CHECKED		

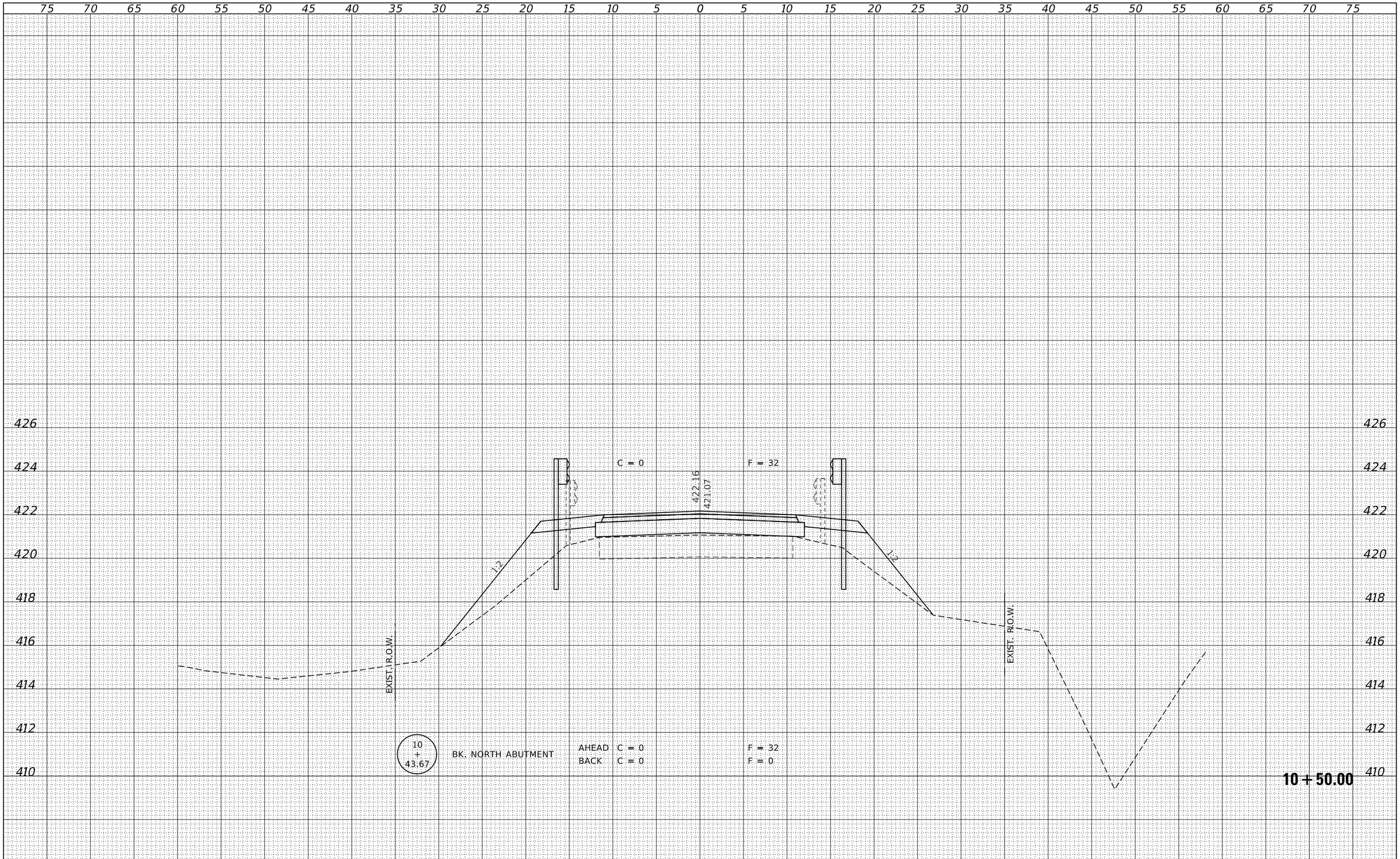

FILE NAME = 180572-sht-xssheets.dgn	USER NAME = rhoskk	DESIGNED - J.W.F.	REVISED -
HAMPTON, LENZINI AND RENWICK, INC. 3085 STEVENSON DRIVE, SUITE 201 SPRINGFIELD, ILLINOIS 62703 ILLINOIS PROFESSIONAL DESIGN FIRM LS / PE / SE CORP. 184.000959		DRAWN - T.W.K.	REVISED -
	PLOT SCALE = $SCALE$	CHECKED - S.W.M.	REVISED -
	PLOT DATE = 11/3/2020	DATE - 11/03/2020	REVISED -

STATE OF ILLINOIS
LAWRENCE COUNTY HIGHWAY DEPARTMENT

STATION CROSS SECTIONS

SCALE: 5H:2V | SHEET NO. 10 OF 14 SHEETS | STA. 10+50.00 TO STA. 10+50.00

F.A.S.	SECTION	COUNTY	TOTAL SHEETS	SHEET NO.
806	18-00122-00-BR	LAWRENCE	29	25
		CONTRACT NO. 95886		
		ILLINOIS	FED. AID PROJECT VFL2(092)	

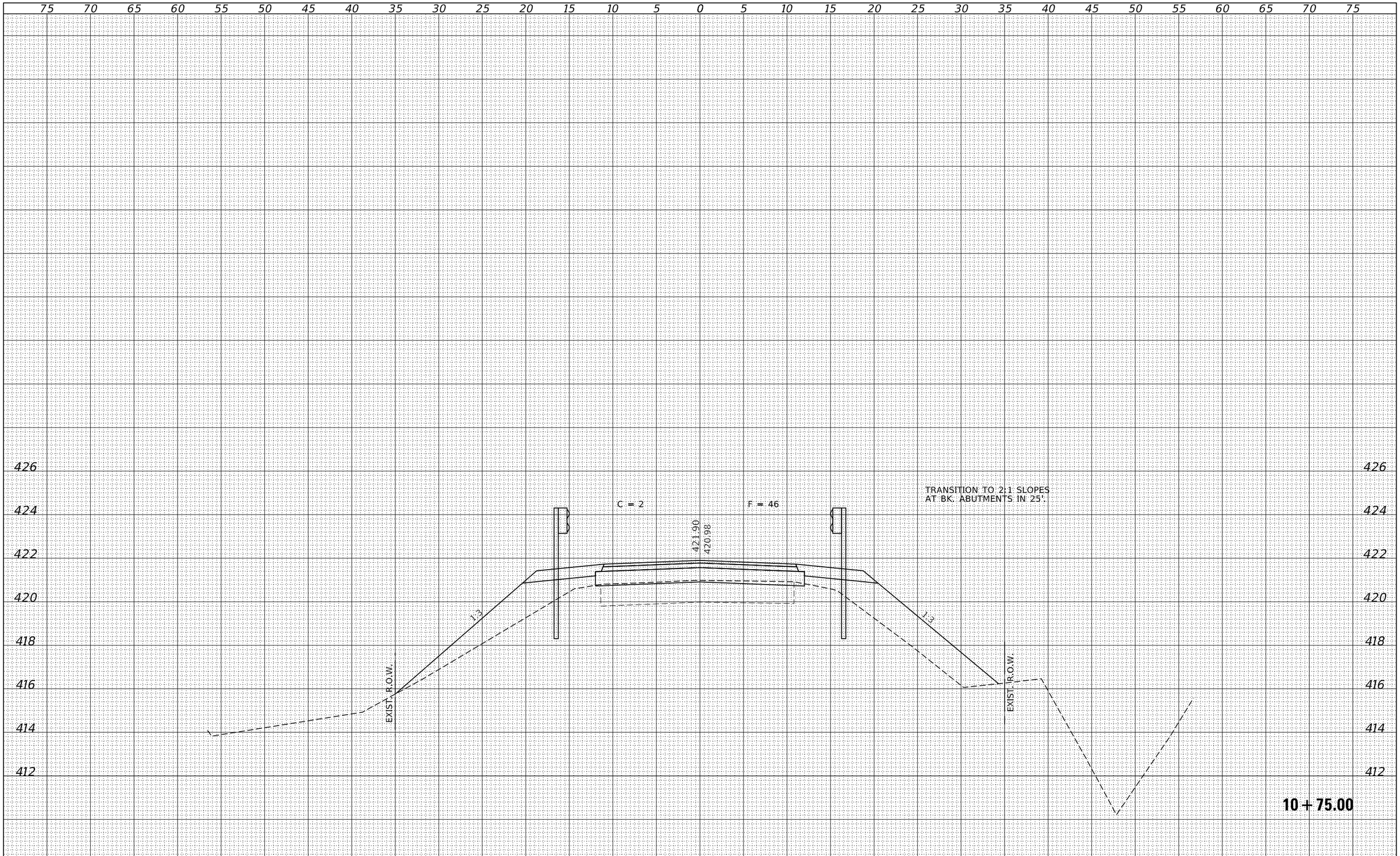

FINAL SURVEY		BY	DATE
NOTE BOOK	SURVEYED		
	PLOTTED		
	TEMPLATE		
	AREAS		
	AREAS CHECKED		
NO.			

ORIGINAL SURVEY		BY	DATE
NOTE BOOK	SURVEYED		
	PLOTTED		
	TEMPLATE		
	AREAS		
	AREAS CHECKED		
NO.			

FILE NAME = 180572-sht-xssheets.dgn	USER NAME = rhoskk	DESIGNED - J.W.F.	REVISED -
HAMPTON, LENZINI AND RENWICK, INC. 3085 STEVENSON DRIVE, SUITE 201 SPRINGFIELD, ILLINOIS 62703		DRAWN - T.W.K.	REVISED -
ILLINOIS PROFESSIONAL DESIGN FIRM LS / PE / SE CORP. 184.000959	PLOT SCALE = $SCALE$	CHECKED - S.W.M.	REVISED -
	PLOT DATE = 11/3/2020	DATE - 11/03/2020	REVISED -

STATE OF ILLINOIS
LAWRENCE COUNTY HIGHWAY DEPARTMENT

STATION CROSS SECTIONS

SCALE: 5H:2V | SHEET NO. 11 OF 14 SHEETS | STA. 10+75.00 TO STA. 10+75.00

F.A.S.	SECTION	COUNTY	TOTAL SHEETS	SHEET NO.
806	18-00122-00-BR	LAWRENCE	29	26
		CONTRACT NO. 95886		
		ILLINOIS	FED. AID PROJECT VFL2(092)	

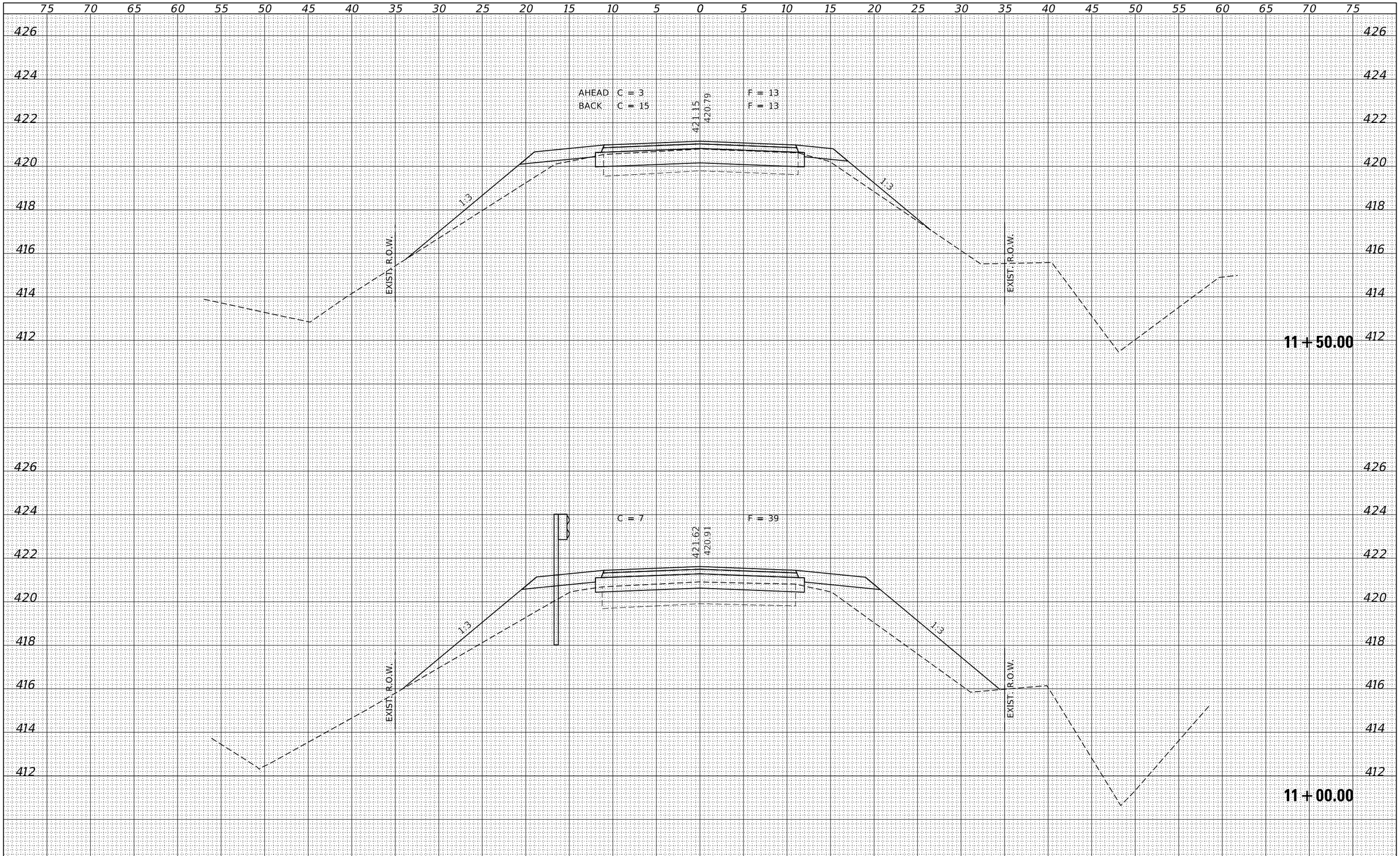

FINAL SURVEY		BY	DATE
NOTE BOOK	SURVEYED		
	PLOTTED		
	TEMPLATE		
	AREAS		
NO.	AREAS CHECKED		

ORIGINAL SURVEY		BY	DATE
NOTE BOOK	SURVEYED		
	PLOTTED		
	TEMPLATE		
	AREAS		
NO.	AREAS CHECKED		

FILE NAME = 180572-sht-xssheets.dgn	USER NAME = rhoskk	DESIGNED - J.W.F.	REVISED -
HAMPTON, LENZINI AND RENWICK, INC. 3085 STEVENSON DRIVE, SUITE 201 SPRINGFIELD, ILLINOIS 62703		DRAWN - T.W.K.	REVISED -
ILLINOIS PROFESSIONAL DESIGN FIRM LS / PE / SE CORP. 184.000959	PLOT SCALE = $SCALE$	CHECKED - S.W.M.	REVISED -
	PLOT DATE = 11/3/2020	DATE - 11/03/2020	REVISED -

STATE OF ILLINOIS
LAWRENCE COUNTY HIGHWAY DEPARTMENT

STATION CROSS SECTIONS

SCALE: 5H:2V | SHEET NO. 12 OF 14 SHEETS | STA. 11+00.00 TO STA. 11+50.00

F.A.S.	SECTION	COUNTY	TOTAL SHEETS	SHEET NO.
806	18-00122-00-BR	LAWRENCE	29	27
		CONTRACT NO. 95886		
		ILLINOIS	FED. AID PROJECT VFL2(092)	

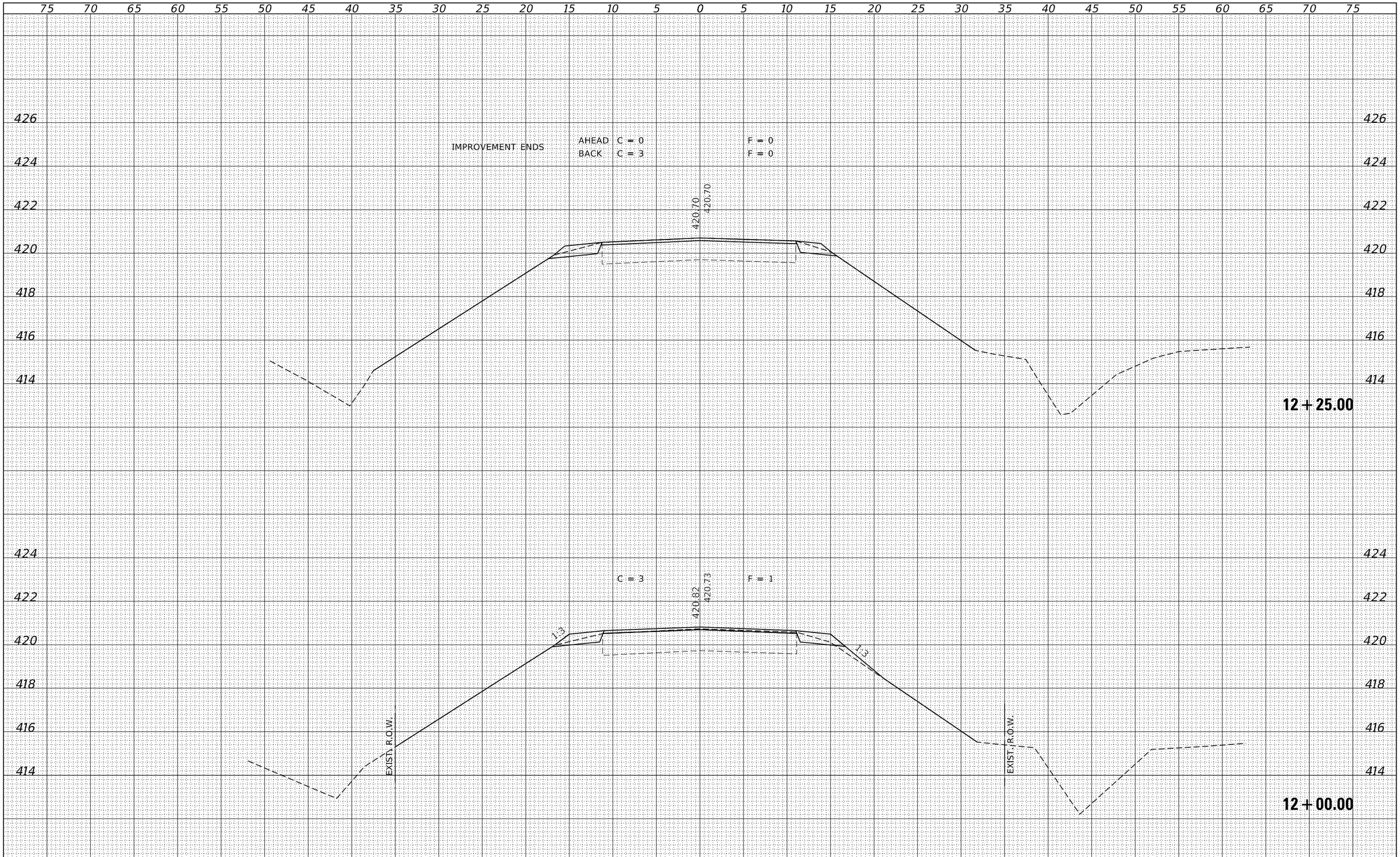

FINAL SURVEY		BY	DATE
NOTE BOOK	SURVEYED		
	PLOTTED		
	TEMPLATE		
	AREAS		
NO.	AREAS CHECKED		

ORIGINAL SURVEY		BY	DATE
NOTE BOOK	SURVEYED		
	PLOTTED		
	TEMPLATE		
	AREAS		
NO.	AREAS CHECKED		

FILE NAME = 180572-sht-xssheets.dgn

USER NAME = rhoslck

HAMPTON, LENZINI AND RENWICK, INC.
3085 STEVENSON DRIVE, SUITE 201
SPRINGFIELD, ILLINOIS 62703
ILLINOIS PROFESSIONAL DESIGN FIRM
LS / PE / SE CORP. 184.000969

PLOT SCALE = $SCALE$

PLOT DATE = 11/3/2020

DESIGNED -	J.W.F.	REVISED -	
DRAWN -	T.W.K.	REVISED -	
CHECKED -	S.W.M.	REVISED -	
DATE -	11/03/2020	REVISED -	

STATE OF ILLINOIS
LAWRENCE COUNTY HIGHWAY DEPARTMENT

STATION CROSS SECTIONS

SCALE: 5H:2V | SHEET NO. 13 OF 14 SHEETS | STA. 12+00.00 TO STA. 12+25.00

F.A.S.	SECTION	COUNTY	TOTAL SHEETS	SHEET NO.
806	18-00122-00-BR	LAWRENCE	29	28

CONTRACT NO. 95886

ILLINOIS | FED. AID PROJECT VFL2(092)

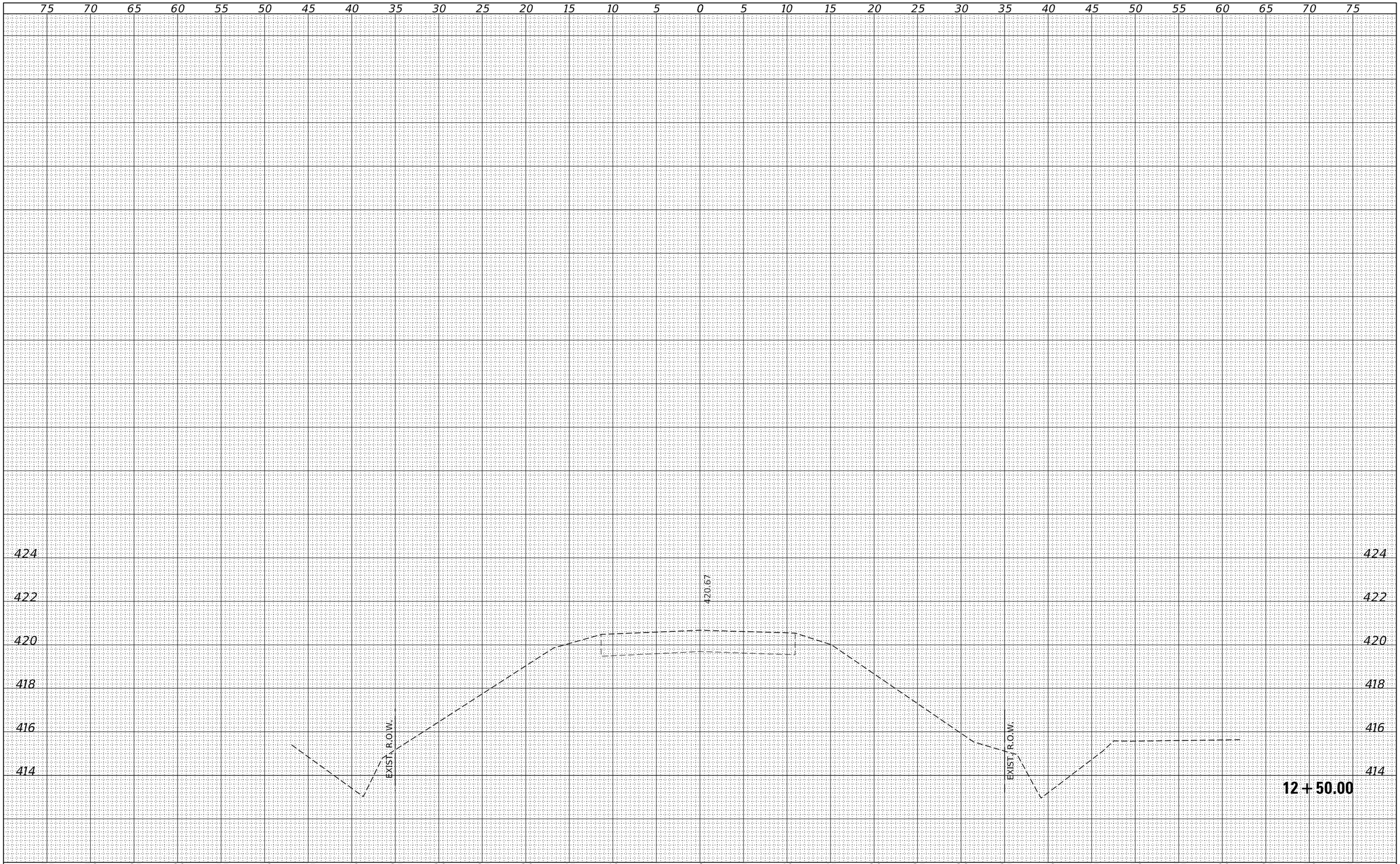

FINAL SURVEY		BY	DATE
	SURVEYED		
	PLOTTED		
NOTE BOOK	TEMPLATE		
	AREAS		
NO.	AREAS CHECKED		

ORIGINAL SURVEY		BY	DATE
	SURVEYED		
	PLOTTED		
NOTE BOOK	TEMPLATE		
	AREAS		
NO.	AREAS CHECKED		

FILE NAME = 180572-sht-xssheets.dgn

USER NAME = rhoslck

PLOT SCALE = $SCALE$

PLOT DATE = 11/3/2020

DESIGNED - J.W.F.
DRAWN - T.W.K.
CHECKED - S.W.M.
DATE - 11/03/2020

REVISED -
REVISED -
REVISED -
REVISED -

HAMPTON, LENZINI AND RENWICK, INC.
3085 STEVENSON DRIVE, SUITE 201
SPRINGFIELD, ILLINOIS 62703
ILLINOIS PROFESSIONAL DESIGN FIRM
LS / PE / SE CORP. 184.000959

STATE OF ILLINOIS
LAWRENCE COUNTY HIGHWAY DEPARTMENT

STATION CROSS SECTIONS

SCALE: 5H:2V | SHEET NO. 14 OF 14 SHEETS | STA. 12+50.00 TO STA. 12+50.00

F.A.S.	SECTION	COUNTY	TOTAL SHEETS	SHEET NO.
806	18-00122-00-BR	LAWRENCE	29	29

CONTRACT NO. 95886

ILLINOIS | FED. AID PROJECT VFL2(092)