TYPICAL SECTION #1 B

MILL AND RUBBLIZE
PASSING LANE CONSTRUCTION

FRANKLIN COUNTY
NORTHBOUND LANES ONLY
FAI RTE 57
(LOOKING IN DIRECTION OF TRAVEL)

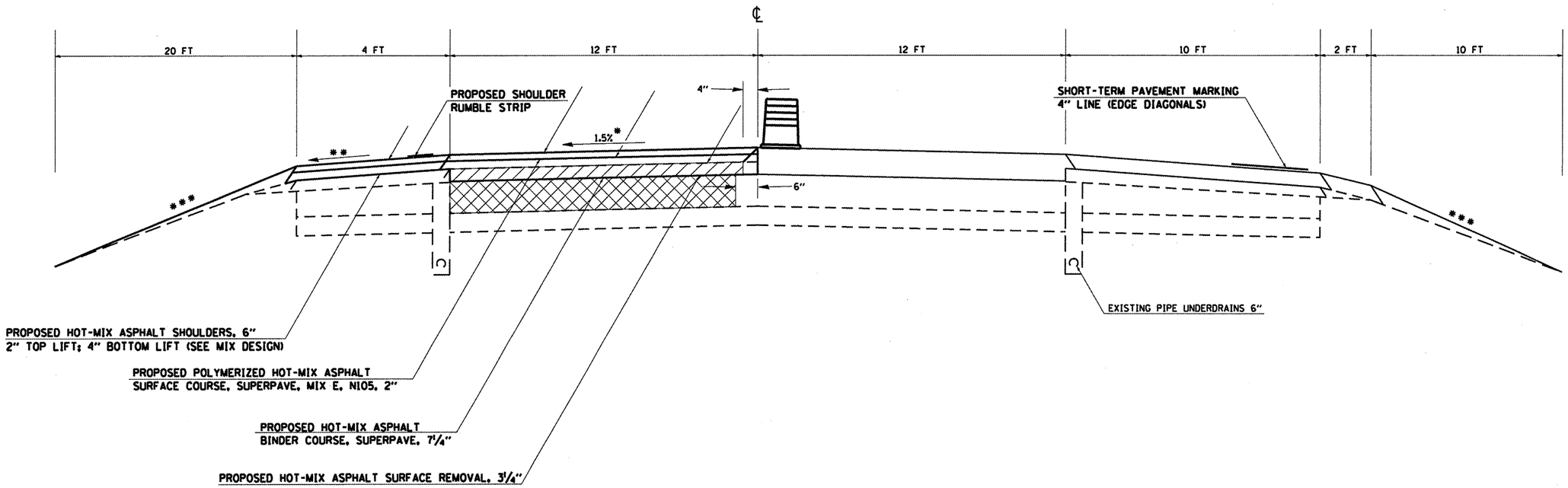

TO BE USED:
STA. 12+40 TO STA. 101+88.5
STA. 103+51.5 TO STA. 173+90
STA. 179+15 TO STA. 226+75
STA. 232+10 TO STA. 280+75
STA. 285+90 TO STA. 303+14
STA. 304+79 TO STA. 413+00
STA. 418+20 TO STA. 441+95
STA. 447+70 TO STA. 469+00

NOTES:

* 1.5% PAVEMENT CROSS SLOPE TO BE ACHIEVED WITH HOT-MIX ASPHALT BINDER COURSE

** MATCH EXISTING SHOULDER SLOPE UP TO 6% MAXIMUM.

*** GRADING AND SHAPING SHOULDERS

PROPOSED RUBBLIZATION OF PORTLAND CEMENT CONCRETE PAVEMENT (METHOD 1)

FILE NAME = c:\pw_work\PWIDOT\COLEMM\dms43741\d978046-sht-msc.dgn	USER NAME = colemm	DESIGNED -	REVISED -	STATE OF ILLINOIS DEPARTMENT OF TRANSPORTATION	TYPICAL SECTION	F.A.I. RTE.	SECTION	COUNTY	TOTAL SHEETS	SHEET NO.
		DRAWN -	REVISED -			57	*	Franklin	52	12
	PLOT SCALE = 103.6758 ' / IN.	CHECKED -	REVISED -					CONTRACT NO. 78046		
	PLOT DATE = 10/15/2008	DATE -	REVISED -		SCALE: SHEET NO. OF SHEETS STA. TO STA.	FED. ROAD DIST. NO.	ILLINOIS	FED. AID PROJECT		

28-01,1-1,1-2,2,2-1,3,3SIRS-1