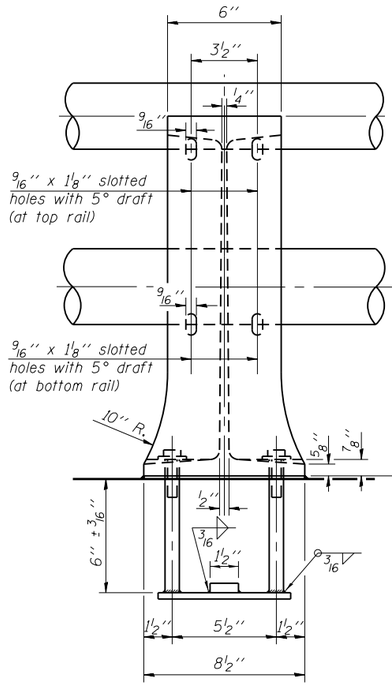

VIEW B-B

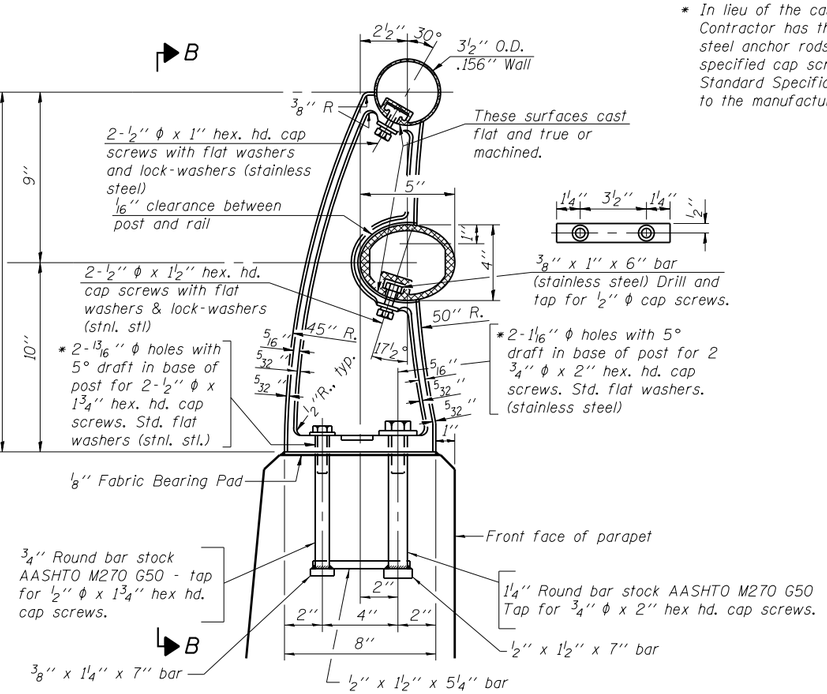

SECTION A-A

RAIL POST DETAILS

* In lieu of the cast-in-place anchor device shown, the Contractor has the option of drilling and setting stainless steel anchor rods of the same diameter and grade as the specified cap screws according to Article 509.06 of the Standard Specifications. Embedment shall be according to the manufacturer's specifications.

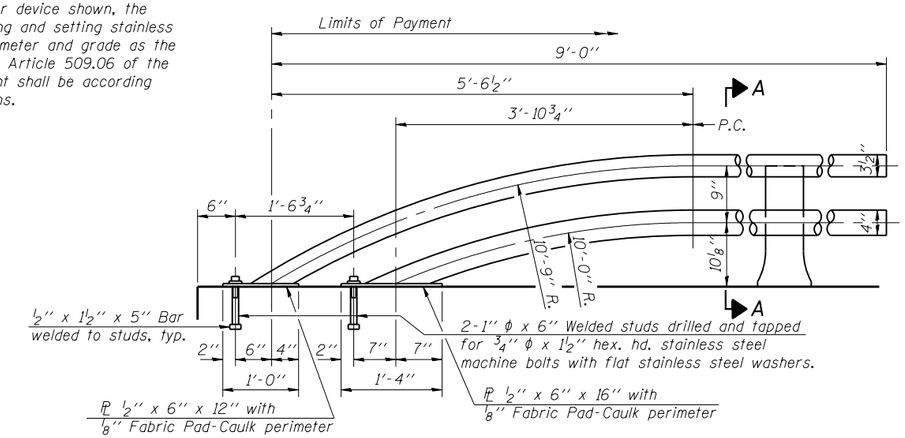

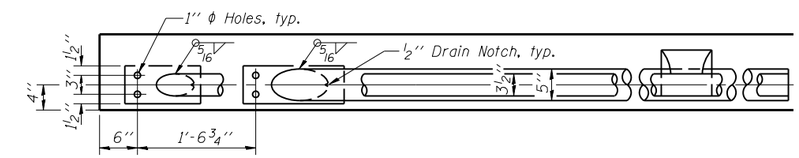

RAIL TERMINAL SECTION

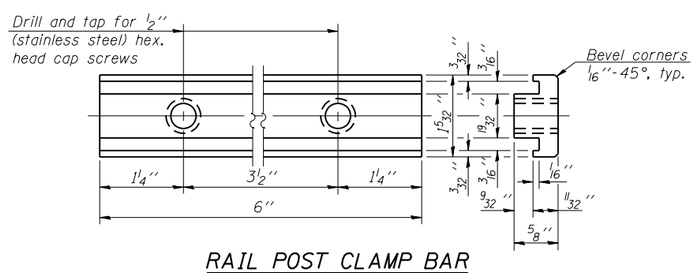

RAIL POST CLAMP BAR

For Top Rail

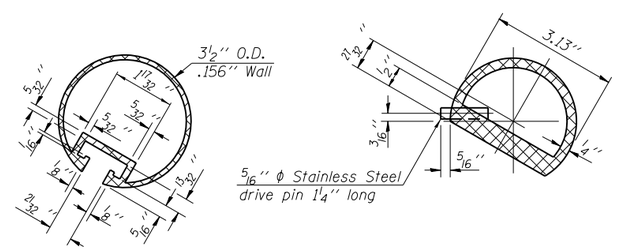

SECTION THRU TOP RAIL

SECTION THRU SPLICE

For Top Rail

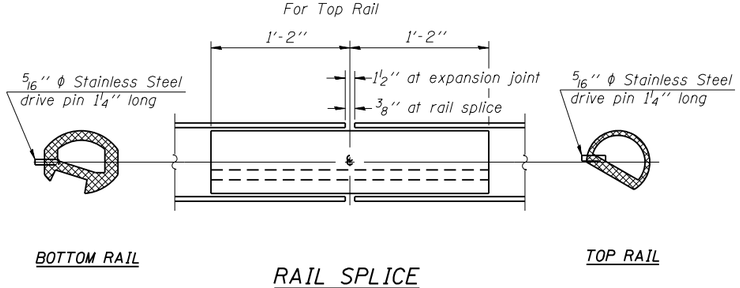

RAIL SPLICE

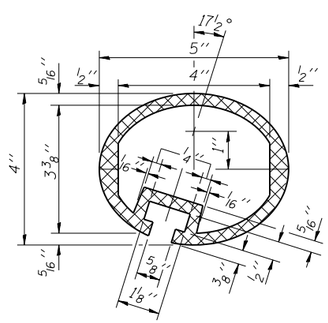

SEC. THRU ELLIPTICAL RAIL SECTION

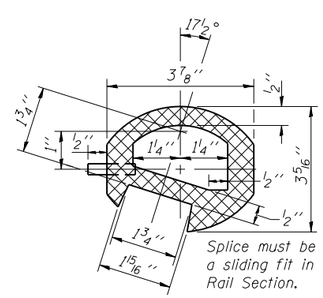

SEC. THRU SPLICE

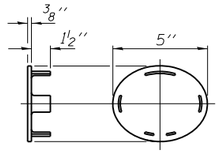

CAST END CAP

For bottom rail
DRIVE FIT TYPE

Note:
The end rail post shall be set back as required for the terminal rail section.

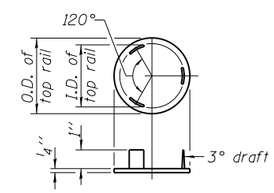

CAST END CAP

For top rail

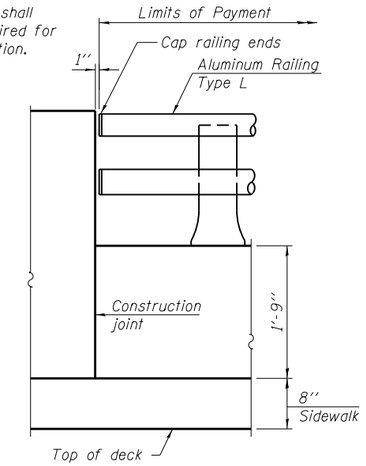

RAIL END TREATMENT FOR TYPE 6 TERMINAL

Notes:
All Posts shall be normal to parapet.
All joints in rail shall be spliced per detail.
All exposed rail ends shall be capped per detail.
Provide 1-⅛'' and 2-1/16'' Aluminum Shims for 25% of the Posts. Rail elements shall be parallel to Grade-high spots will be ground and low spots shimmed.
See sheet S13 of S26 for rail post spacing on the bridge and sheet S18 of S26 for the rail terminal section on the East Approach.

BILL OF MATERIAL

Item	Unit	Quantity
Aluminum Railing, Type L	Foot	156

R-20

1-27-12 (7'-0'' to 10'-0'' Post spacing)

COLLINS ENGINEERS 123 N. Wacker Dr. Suite 900 Chicago, Il. 60606 Tele. (312) 704-9300 Fax (312) 704-9320 www.collinseng.com
ILLINOIS PROFESSIONAL DESIGN FIRM LICENSE NO. 184-000993

USER NAME =	DESIGNED - LJ	REVISED
	CHECKED - EKM	REVISED
PLOT SCALE =	DRAWN - DR	REVISED
PLOT DATE =	CHECKED - LJ	REVISED

STATE OF ILLINOIS
DEPARTMENT OF TRANSPORTATION

ALUMINUM RAILING, TYPE L
STRUCTURE NO. 022-0158

SHEET NO. S20 OF S26 SHEETS

F.A.P. RTE.	SECTION	COUNTY	TOTAL SHEETS	SHEET NO.
307	131B-BR	DuPAGE	111	89

CONTRACT NO. 60V24

ILLINOIS FED. AID PROJECT