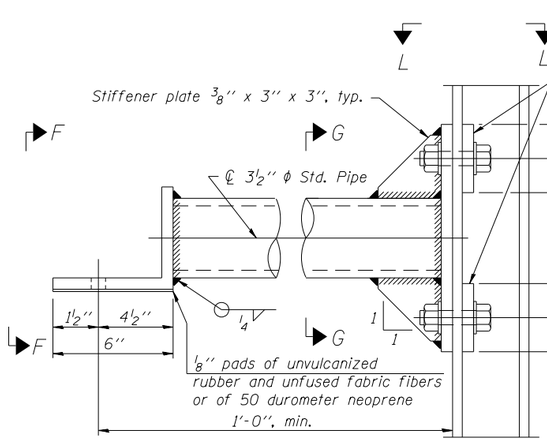

DETAIL A

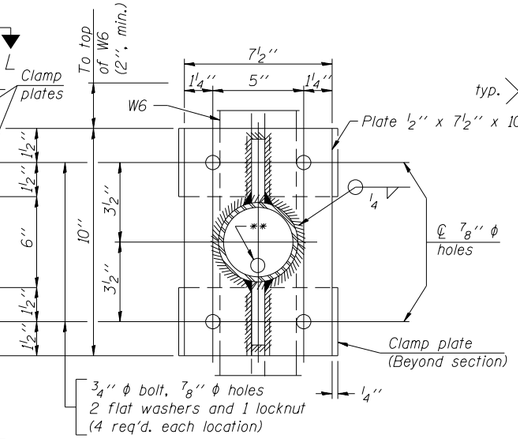

SECTION G-G

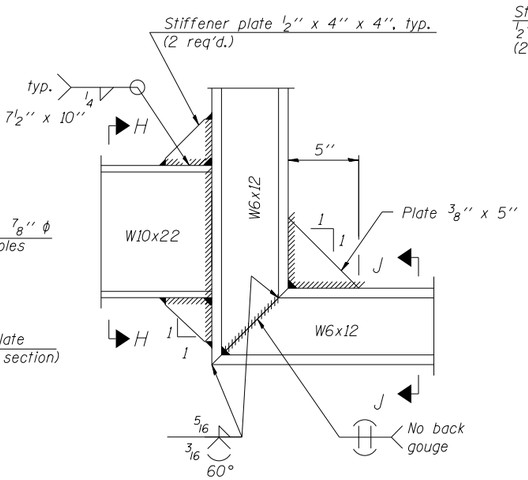

DETAIL B - WELDED W10x22 TO W6x12 CONNECTION

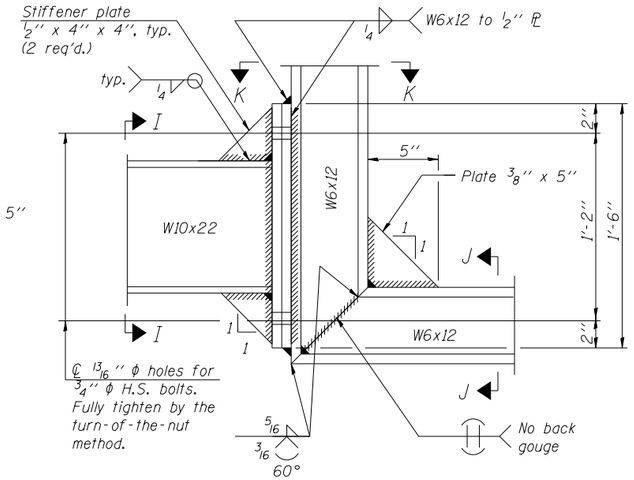

DETAIL B - ALTERNATE BOLTED W10x22 TO W6x12 CONNECTION

Alternate may be substituted by contractor to facilitate construction or galvanizing, especially on long struts for skewed bridges.

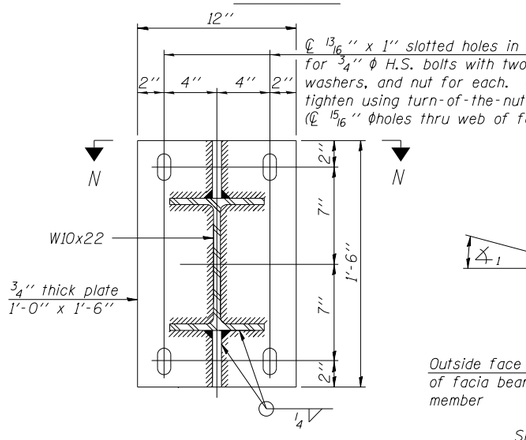

SECTION C-C

Steel beam or girder connection plate details

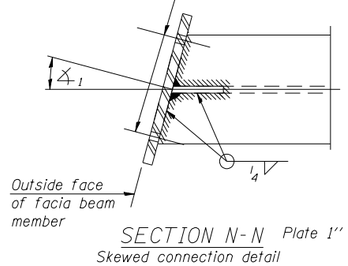

SECTION N-N

Skewed connection detail for W10x22 to facia beam.

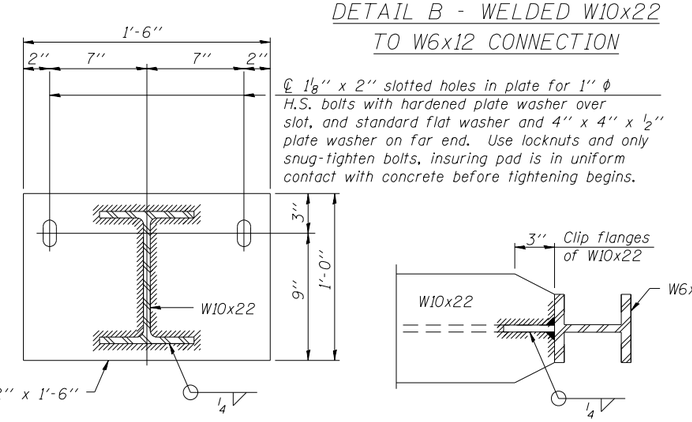

SECTION D-D

Concrete beam or girder connection plate details.

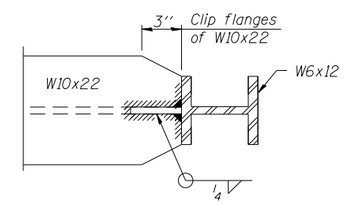

SECTION E-E

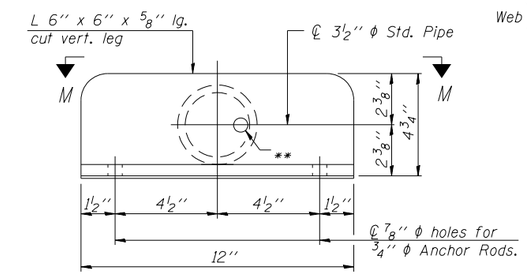

VIEW F-F

** 13/16'' ϕ holes for galvanizing. After galvanizing, install 7/8'' ϕ A307 hot-dip galvanized bolt to close hole in angle. (No bolt required in 1/2'' plate.)

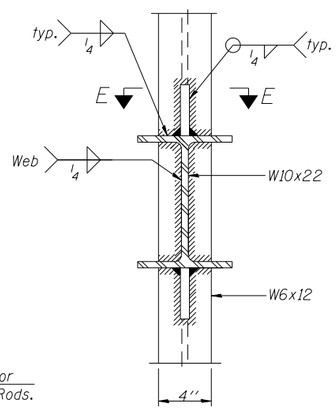

SECTION H-H

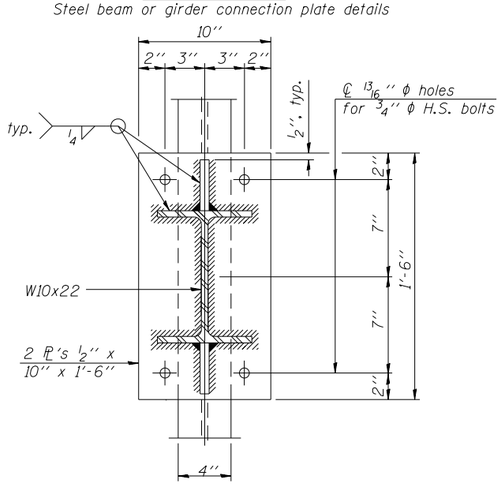

SECTION I-I

Note: For constant slab overhang at facia beam. ∡1 = ∡2 = sign angle. For flared beams or other special cases where ∡1 ≠ ∡2. ∡1 = sign angle.

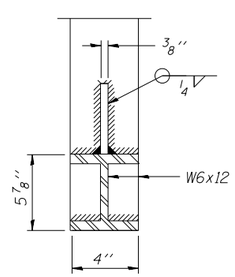

SECTION J-J

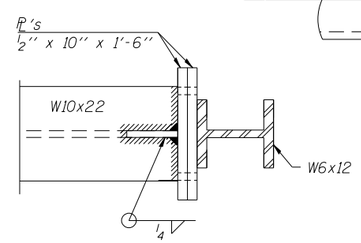

SECTION K-K

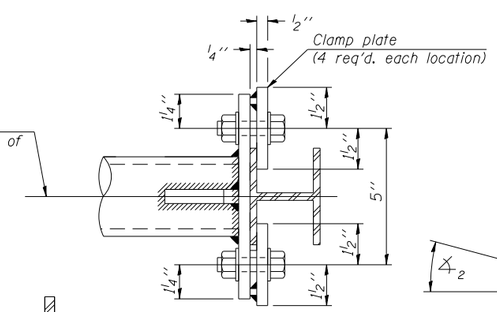

SECTION L-L

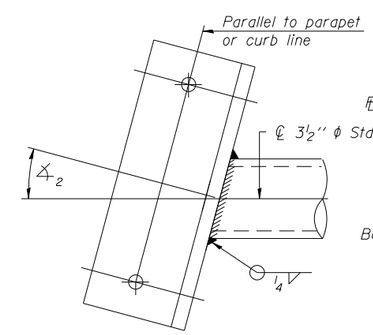

SECTION M-M

Skewed connection detail for 3 1/2'' ϕ pipe to parapet.

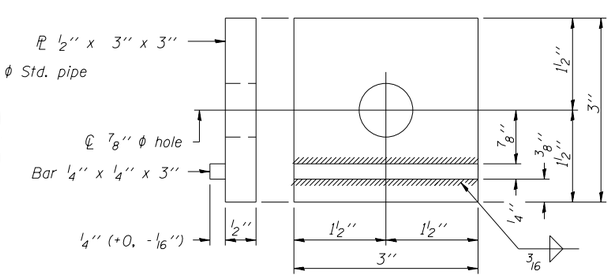

CLAMP PLATE DETAILS

D160W29-Sht-Sign-Det-04.dgn	DESIGNED - WJC	REVISED -	
USER NAME = BAWitort	DRAWN - WJC	REVISED -	
PLOT SCALE = 2.0000 ' / in.	CHECKED - KAM	REVISED -	
PLOT DATE = 10/28/2013	DATE - 10/30/2013	REVISED -	

TranSystems

STATE OF ILLINOIS
DEPARTMENT OF TRANSPORTATION

BRIDGE MOUNT SIGN STRUCTURES
CONNECTION DETAILS

SCALE: NONE | SHEET 3 OF 5 SHEETS | STA. TO STA.

F.A.I. RTE.	SECTION	COUNTY	TOTAL SHEETS	SHEET NO.
90/94/290	2013-011R	COOK	356	105
		CONTRACT NO. 60W29		
		ILLINOIS FED. AID PROJECT		

FILE PATH = pw:\\388039-pwntlaecomonline.local:PWAECOM02\Documents\01 Americas\Transportation\60269938 Circle\Phase II\000 CAD\006-Roadway\Sheets\60W29_Contract\D160W29-Sht-Sign-Det-04.dgn