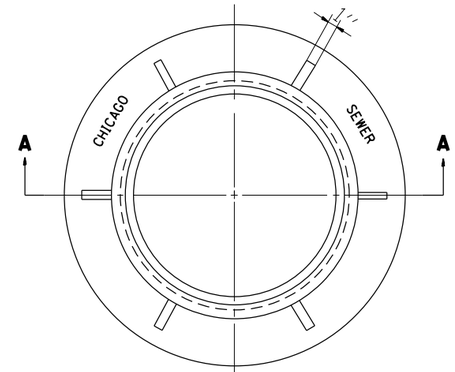

PLAN

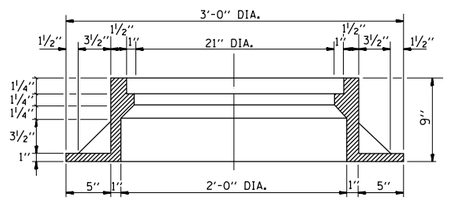

SECTION A-A

NOTE: METAL PLATES MUST BE FURNISHED FOR PERFORATED LIDS ON MANHOLES

CHICAGO STANDARD MANHOLE FRAME

SCALE: 1½"=1'-0"
MATERIAL: CAST IRON

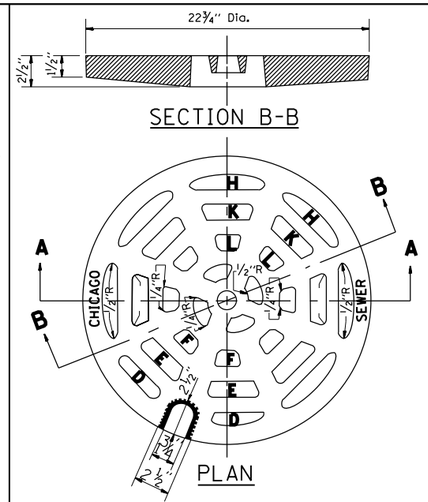

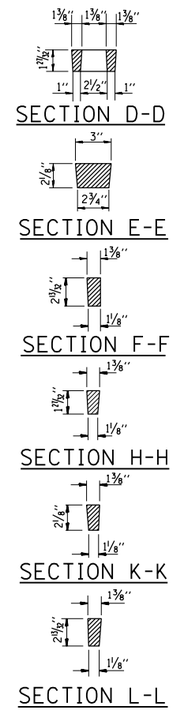

PERFORATED LID FOR CATCH BASINS & MANHOLES

SCALE: 2"=1'-0"
MATERIAL: CAST IRON

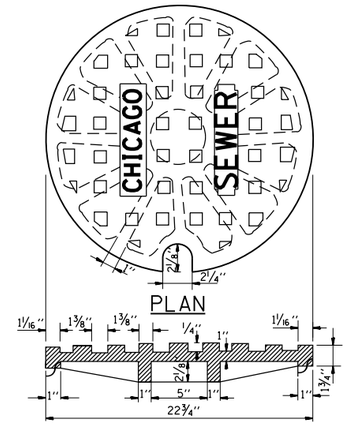

SOLID LID FOR MANHOLES

SCALE: NONE
MATERIAL: CAST IRON

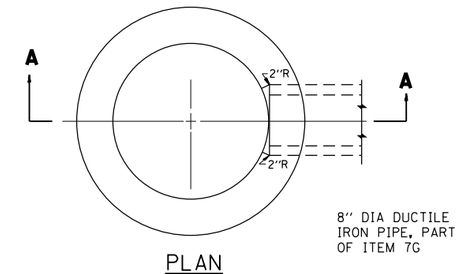

PLAN
(FRAME & LID NOT SHOWN)

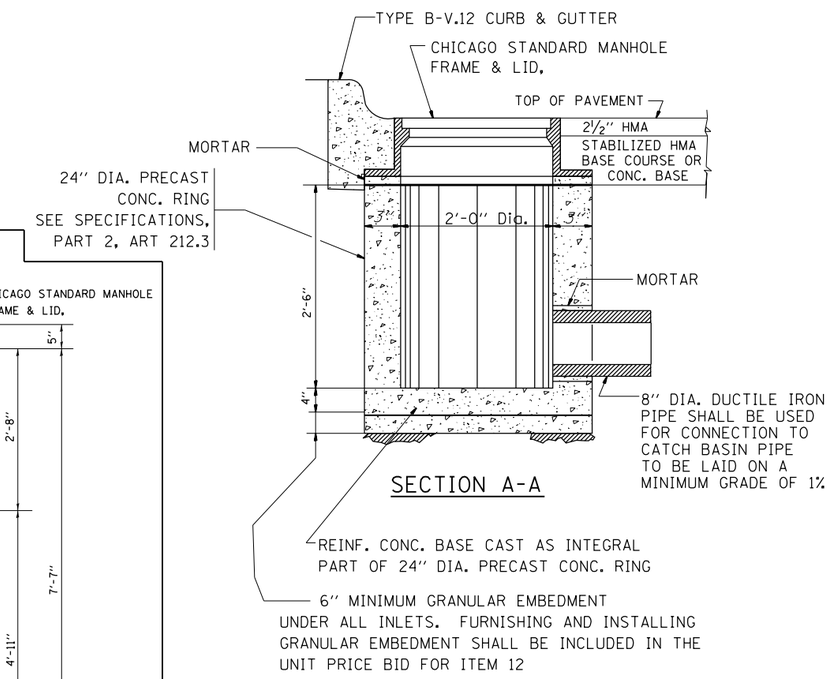

SECTION A-A

STANDARD INLETS

SCALE 1"= 1'-0"
ITEM 12

THIS INLET DETAIL IS SOMETIMES REFERRED TO AS "CHICAGO STANDARD INLET, TYPE A"

NOTE:
INLETS SHALL NOT BE CONSTRUCTED UNLESS IT IS IMPOSSIBLE TO CONSTRUCT A CATCH BASIN. THE CONTRACTOR SHALL HAVE THE DEPARTMENT OF SEWERS APPROVAL BEFORE CONSTRUCTING INLETS.

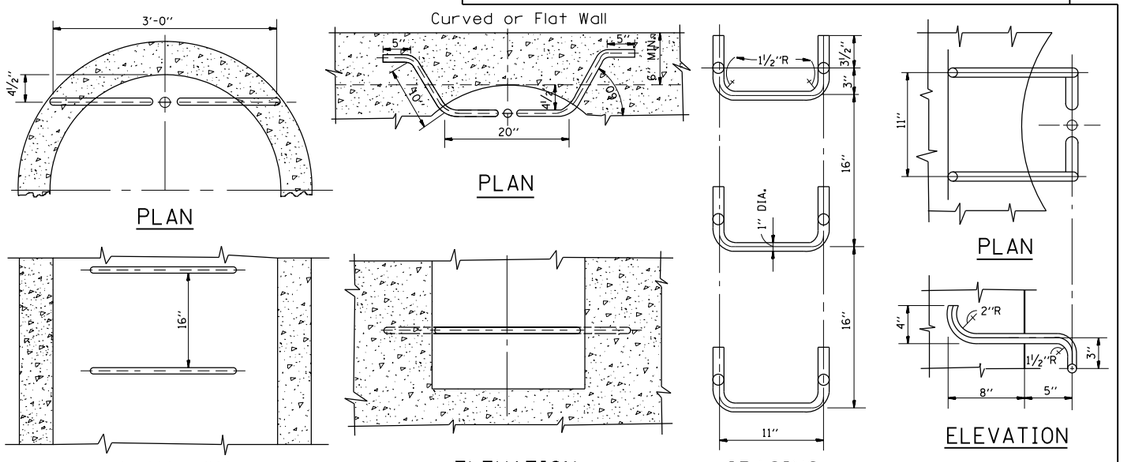

STANDARD LADDER RUNGS

ALL LADDER RUNGS SHALL BE ALUMINUM OR GALVANIZED WROUGHT IRON AS SPECIFIED IN THE SPECIFICATIONS, PART 2, ARTICLE 214.2. RUNGS SHALL BE 1" DIAMETER OR OF A SHAPE HAVING AN EQUIVALENT CROSS-SECTIONAL AREA.

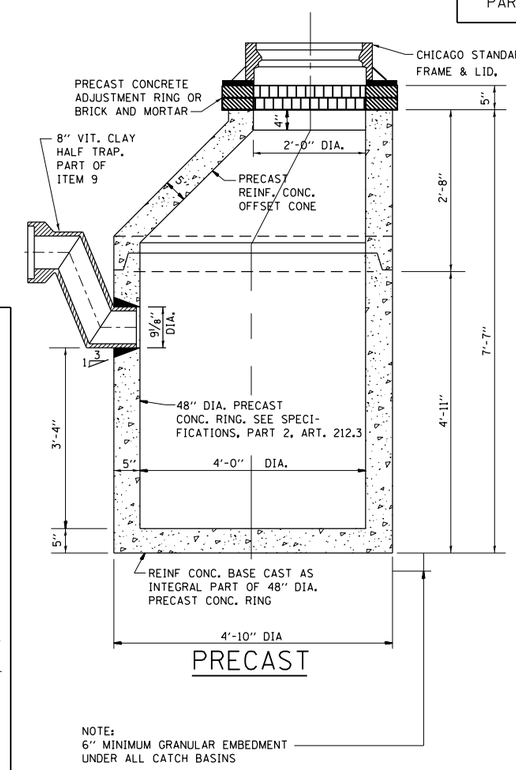

PRECAST

STANDARD CATCH BASINS

SCALE: ¾"= 1'-0"
ITEM 9

CITY OF CHICAGO
DEPARTMENT OF SEWERS
ENGINEERING DIVISION

FILE NAME = c:\pw_work\pwidot\hamptoncd\d0345019\DistStd.dgn	USER NAME = hamptoncd	DESIGNED - M. GOMEZ	REVISED -
		DRAWN -	REVISED -
	PLOT SCALE = 100.0000 ' / in.	CHECKED -	REVISED -
	PLOT DATE = 10/31/2013	DATE - 01-25-01	REVISED -

STATE OF ILLINOIS
DEPARTMENT OF TRANSPORTATION

CITY OF CHICAGO
CATCH BASIN, INLET AND MANHOLE DETAILS

SCALE: NONE | SHEET NO. 1 OF 1 SHEETS | STA. | TO STA.

F.A.P. RTE.	SECTION	COUNTY	TOTAL SHEETS	SHEET NO.
348	(3130(A&B) & 2324.3)RS-3	COOK	42	26
	BD600-13 (BD47)	CONTRACT NO. 60W61		
FED. ROAD DIST. NO. 1	ILLINOIS	FED. AID PROJECT		