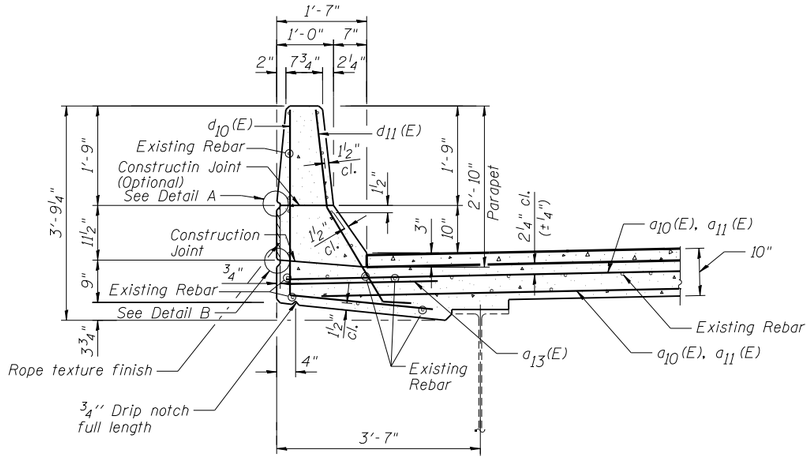

SECTION D-D THRU BRIDGE PARAPET

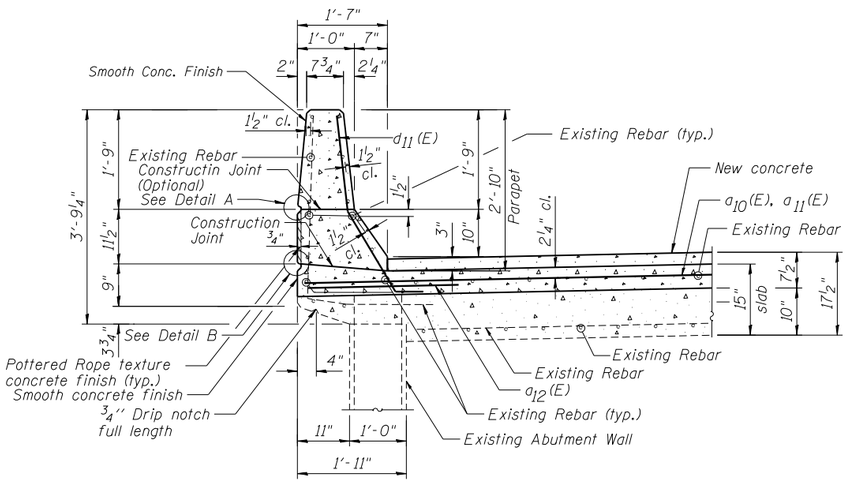

SECTION C-C THRU ABUTMENT PARAPET

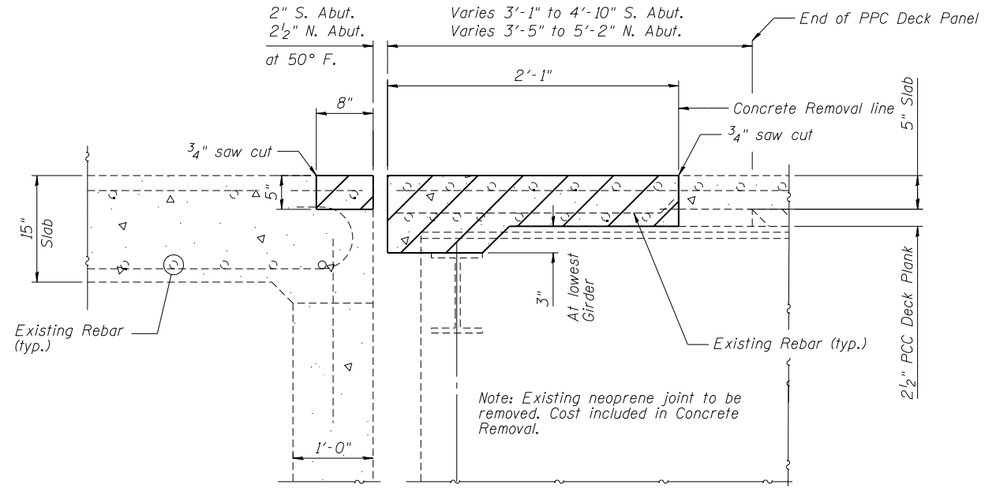

SECTION A-A
CONCRETE REMOVAL DETAIL

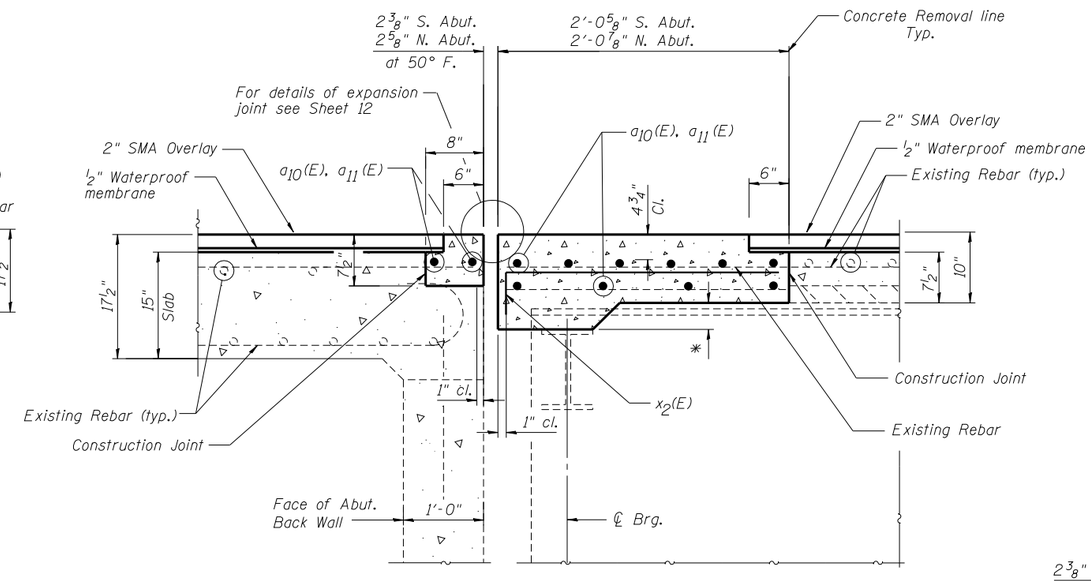

SECTION B-B
CONCRETE REPLACEMENT DETAIL

* Height of corbel varies
Elevation of end diaphragm
constant between all girders.

NORTH ABUTMENT BILL OF MATERIAL

Bar	No.	Size	Length	Shape
a_{10} (E)	11	#5	29'-7"	
a_{11} (E)	11	#5	27'-7"	
a_{12} (E)	4	#6	4'-0"	
a_{13} (E)	6	#6	5'-6"	
d_{10} (E)	6	#4	5'-8"	
d_{11} (E)	10	#5	3'-11"	
x_2(E)	57	#5	2'-4"	
	Item		Unit	Quantity
Reinforcement Bars, Epoxy Coated			Pound	930
Bar Splicers			Each	11

SOUTH ABUTMENT BILL OF MATERIAL

Bar	No.	Size	Length	Shape
a_{10} (E)	11	#5	29'-7"	
a_{11} (E)	11	#5	27'-7"	
a_{12} (E)	4	#6	4'-0"	
a_{13} (E)	6	#6	5'-6"	
d_{10} (E)	6	#4	5'-8"	
d_{11} (E)	10	#5	3'-11"	
x_2(E)	57	#5	2'-4"	
	Item		Unit	Quantity
Reinforcement Bars, Epoxy Coated			Pound	930
Bar Splicers			Each	11

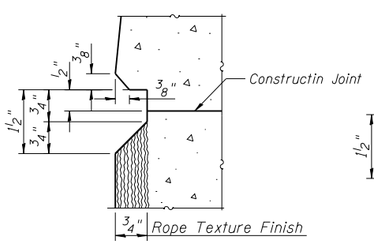

DETAIL A

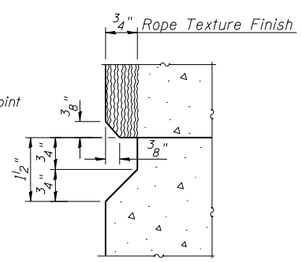

DETAIL B

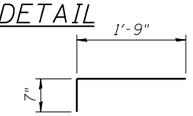

BAR x_2(E)

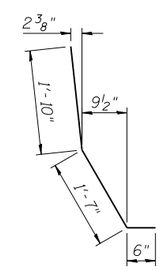

BAR d_{11} (E)

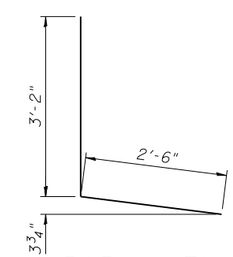

BAR d_{10} (E)

FILE NAME = $FILES$

TranSystems	USER NAME = sdgnann	DESIGNED -	REVISED -
		CHECKED -	REVISED -
	PLOT SCALE = $SCALE$	DRAWN -	REVISED -
	PLOT DATE = 5/22/2013	CHECKED -	REVISED -

STATE OF ILLINOIS
DEPARTMENT OF TRANSPORTATION

DECK JOINT DETAILS
STRUCTURE NO. 060-0222SB

SHEET NO. 11 OF 14 SHEETS

F.A.I. RTE.	SECTION	COUNTY	TOTAL SHEETS	SHEET NO.
255	60-(8,9) RS-1	MADISON	206	180
		CONTRACT NO. 76F10		
		ILLINOIS FED. AID PROJECT		

5/22/2013 $TIME$ - g:\SLI2\000\Bridge\CAD\sheets\Bridge 0222-0242\0600222-76F10-II-Deck_Joint_Details.SB.dgn