DESIGNER NOTES:

1. THIS DRAWING SHOULD BE USED IN CONJUNCTION WITH STATE STANDARD 424001 AND DISTRICT CADD std. " CURB RAMPS ACCESSIBLE TO THE DISABLED."

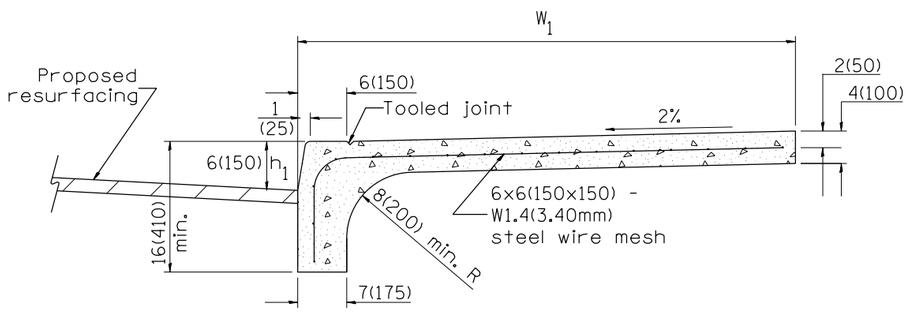

COMBINATION CURB - SIDEWALK 4"(100mm)

Measurement Formula: $(W_1 + h_1)$ x length constructed = Payment area in square meters(square feet)

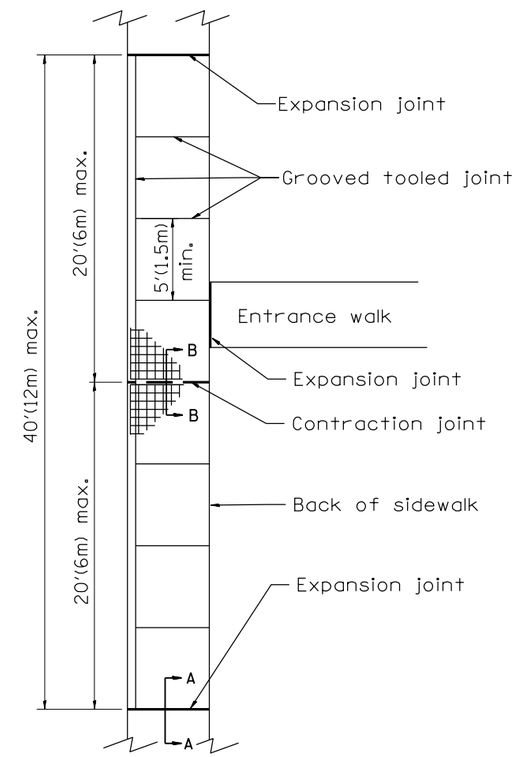

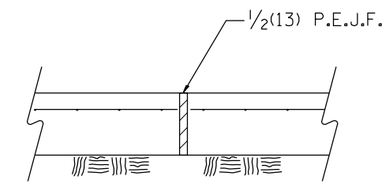

SEC. A-A

Expansion Joint

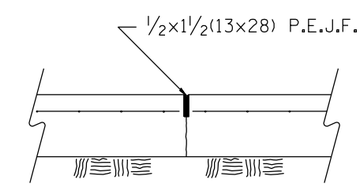

SEC. B-B

Contraction Joint

GENERAL NOTES:

1. All provisions in Section 424 of the Standard Specifications shall apply, unless otherwise shown.

All dimensions are in inches (millimeters) unless otherwise noted.

01-01-97	RENUM. A-5.02. NEW REVISION BOX	T.P.
10-16-06	REVISED TO 2007 SPEC.	M.A.

STATE OF ILLINOIS
DEPARTMENT OF TRANSPORTATION

COMBINATION CONCRETE CURB-SIDEWALK 4" (100mm)

NOT TO SCALE — CADD STD. 424101-D4

F.A. RTE.	SECTION	COUNTY	TOTAL SHEETS	SHEET NO.
1380	7W-1. RS-3	PEORIA	617	349
		CONTRACT NO. 88792		

FED. ROAD DIST. NO. | ILLINOIS | FED. AID PROJECT