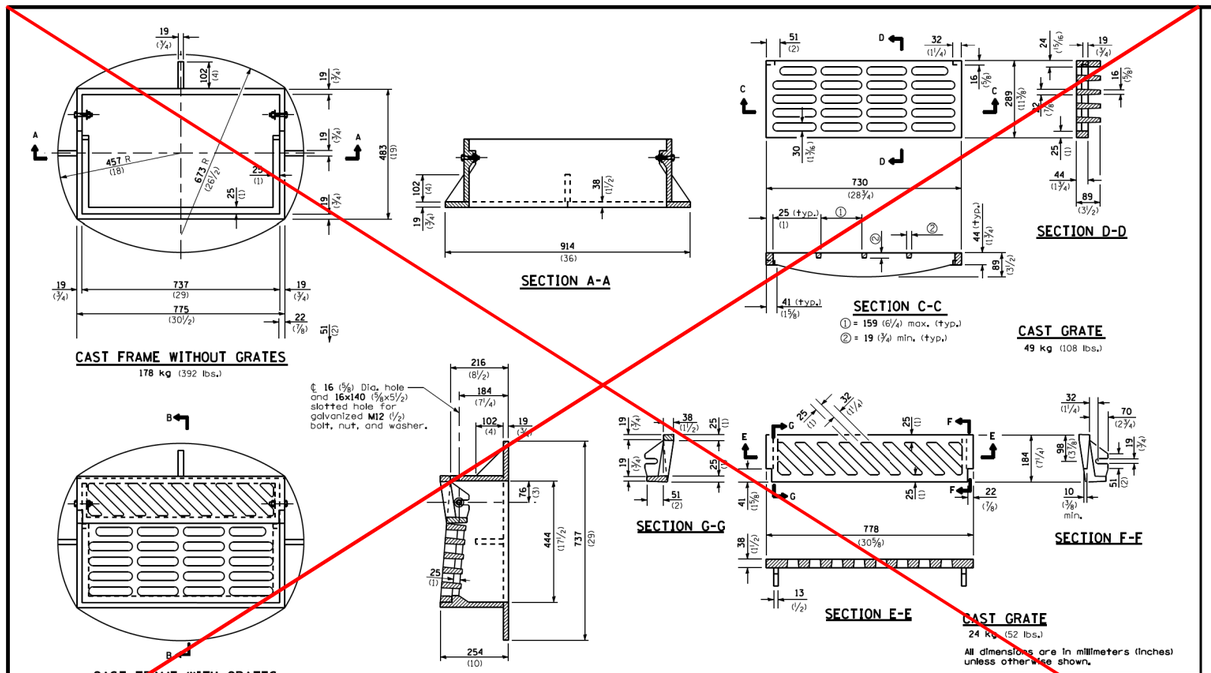

•NEENAH R-3501-R FRAME AND GRATE OR APPROVED EQUAL

•FRAME AND GRATE TYPE 9C

TEMPORARY DITCH CHECKS

PLACEMENT OF TEMPORARY DITCH CHECK IN DRAINAGE WAY

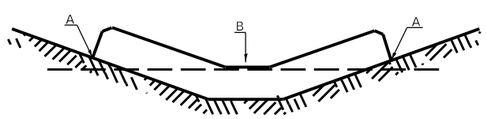

POINTS A SHOULD BE HIGHER THAN POINT B

SPACING BETWEEN TEMPORARY DITCH CHECKS

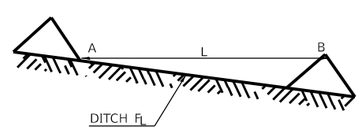

L = THE DISTANCE SUCH THAT POINTS A AND B ARE OF EQUAL ELEVATION

B = THE LOW POINT IN CENTER OF CHECK

REVISIONS	
DRAWN	9-01-99
REVISED	10-3-01
RESIZED	5-8-08
REVISED	05-04-10
REVIEWED	5-17-13
REVISED	10-21-21

STD. 9-108

INLET SPECIAL

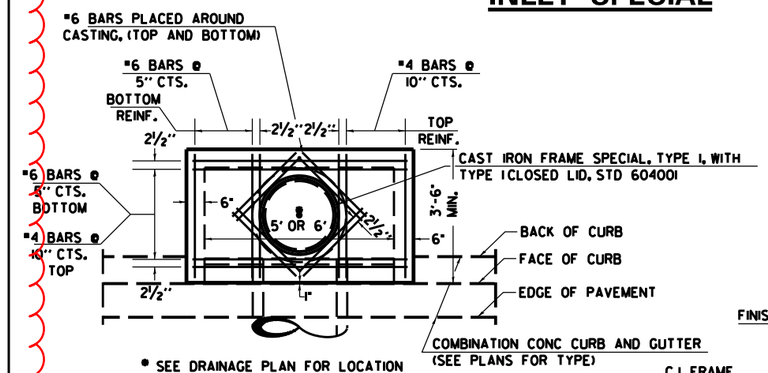

* SEE DRAINAGE PLAN FOR LOCATION TO USE EITHER 5' OR 6' INTERIOR

PLAN

1

"D" TABLE

DESIGN	PIPE DIA	"D"
A	18"&LESS	2'-6"
B	21"&24"	3'-0"
C	27"&30"	3'-7"
D	33"&36"	4'-2"
E	42"	4'-9"
F	48"	5'-0"
G	54"	6'-1"

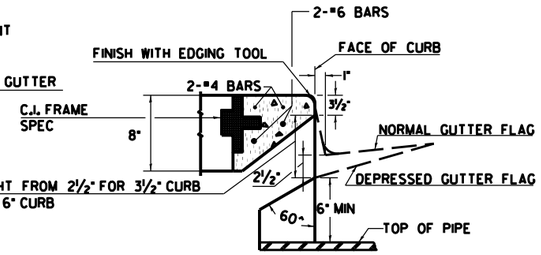

SECTION AT WEIR

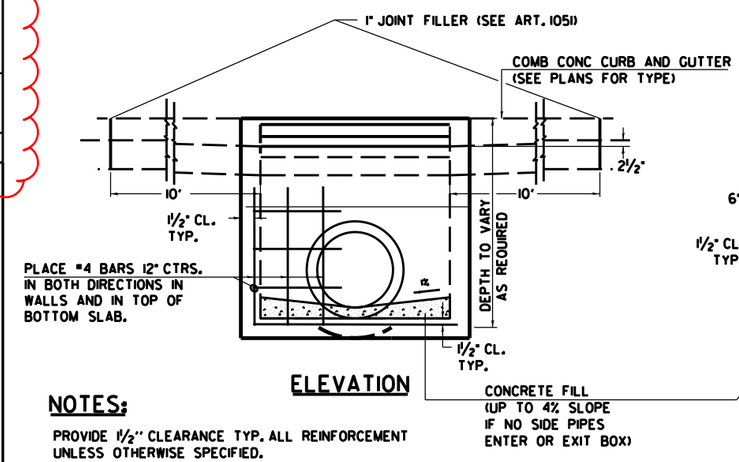

ELEVATION

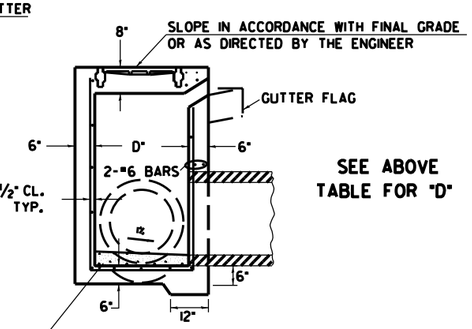

SEE ABOVE TABLE FOR "D"

SECTION

NOTES:

PROVIDE 1½" CLEARANCE TYP. ALL REINFORCEMENT UNLESS OTHERWISE SPECIFIED.

GUTTER FLOWLINE AT INLET 2½" BELOW NORMAL GUTTER FLOWLINE. CONSTRUCT TRANSITION IN FLOWLINE IN 10 FEET EACH SIDE OF INLET. PIPES TO BE CONNECTED TO INLET AS SHOWN ON STORM SEWER LAYOUT.

INLETS WILL BE PAID FOR AT THE CONTRACT UNIT PRICE EACH FOR **INLET, SPECIAL.** WHICH PRICE SHALL INCLUDE THE CAST IRON FRAME, SPECIAL, TYPE 1 WITH TYPE 1 CLOSED LID, THE REINFORCEMENT BARS, METAL STEPS AND JOINT FILLER.

IF THE INLET IS NOT CAST IN PLACE THEN THE INLET SHALL BE PRODUCED ACCORDING TO THE DEPARTMENT'S CURRENT STANDARD SPECIFICATIONS SECTIONS 602 AND 1042.

••STEPS WILL BE REQUIRED AT 12" SPACING WHEN INLET IS OVER 4' DEEP. SEE ARTICLE 602.08 OF THE STANDARD SPECS AND DETAILS

CAST IRON STEPS SHALL BE GRAY IRON CONFORMING TO THE REQUIREMENTS OF ARTICLE 1006.14 OF THE STANDARD SPECIFICATIONS.

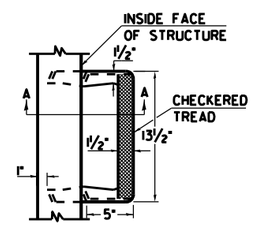

•• CAST IRON STEPS

TREAD DIMENSION DETAILS SEE HWY STD 602701

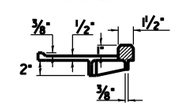

SEC. A-A

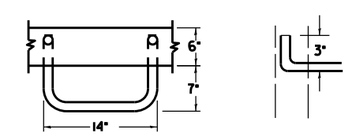

•• GALVANIZED IRON STEPS

1" ROUND GALVANIZED IRON STEPS 12" O.C. (OPTIONAL STEPS)

STD. 9-1

REVISIONS			
REDRAWN	2-15-89	REVISED	3-26-08
REVISED	8-15-94	REVISED	4-10-13
REVISED	1-19-99	REVISED	
REVISED	5-6-04	REVISED	

USER NAME = spool	DESIGNED -	REVISED -	STATE OF ILLINOIS WILLIAMSON COUNTY HIGHWAY DEPARTMENT
	DRAWN -	REVISED -	
PLOT SCALE = 0.0833 ' / in.	CHECKED -	REVISED -	
PLOT DATE = 12/12/2023	DATE -	REVISED -	

DETAILS

SCALE: SHEET OF SHEETS STA. TO STA.

C.H. RTE.	SECTION	COUNTY	TOTAL SHEETS	SHEET NO.
29	19-00156-00-SP	WILLIAMSON	76	59

Revised 12-16-24

CONTRACT NO. 99687

ILLINOIS FED. AID PROJECT

MODEL: Default - Copy-1
FILE NAME: pw://dome-pw.bentley.com:bfdome-pw-03/Documents/BFW/PROJECTS/2021 PROJECTS/21274 - Williamson Co - Skyline-Crenshaw Roundabout/IDOT/CAD Sheets/0999687-Special-details.dgn