F.A.S. RTE.	SECTION	COUNTY	TOTAL SHEETS	SHEET NO.
364	20-00091-03-BR	WOODFORD	114	1
	ILLINOIS	CONTRACT NO. 89854		

01-17-2025 LETTING ITEM 136

INDEX OF SHEETS, SEE SHEET NO. 2

LIST OF STANDARDS, SEE SHEET NO. 2

PROPOSED IMPROVEMENT – THIS PROJECT CONSISTS OF THE RECONSTRUCTION OF COUNTY HIGHWAY 13 FROM JUST SOUTH OF THE WOODFORD COUNTY HIGHWAY DEPARTMENT TO ILL ROUTE 116. THE IMPROVEMENTS INCLUDE THE REMOVAL AND REPLACEMENT OF THE STRUCTURE CARRYING COUNTY HIGHWAY 13 OVER THE WEST BRANCH OF PANTHER CREEK.
THE PROJECT CONSISTS OF EARTHWORK, PCC PAVEMENT, HMA PAVEMENT, ROADWAY WIDENING AND RESURFACING, STORM SEWER, PCC SIDEWALK AND OTHER COLLATERAL WORK AS NECESSARY TO COMPLETE THE PROJECT.

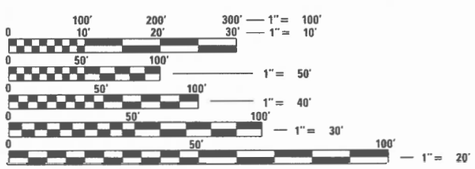

FULL SIZE PLANS HAVE BEEN PREPARED USING STANDARD ENGINEERING SCALES. REDUCED SIZED PLANS WILL NOT CONFORM TO STANDARD SCALES. IN MAKING MEASUREMENTS ON REDUCED PLANS, THE ABOVE SCALES MAY BE USED.

J.U.L.I.E.
JOINT UTILITY LOCATION INFORMATION FOR EXCAVATION
1–800–892–0123
OR 811

PROJECT ENGINEER JEFFRY SPILLER, P.E.
PROJECT MANAGER JEFFRY SPILLER, P.E.

MAURER-STUTZ
ENGINEERS SURVEYORS
3116 DRIES LN STE 100
PEORIA, ILLINOIS 61604
PH. (309) 693-7615
FAX (309) 693-7616
PROFESSIONAL DESIGN FIRM #184-005754

CATALOG NO. 035364–03D
CONTRACT NO. 89854

STATE OF ILLINOIS
DEPARTMENT OF TRANSPORTATION

PLANS FOR PROPOSED COUNTY IMPROVEMENT

COUNTY HIGHWAY 13 (FAS ROUTE 364)
SECTION 20–00091–03–BR
PROJECT NO. L040(405)
WOODFORD COUNTY
JOB NO. C–94–042–24

S.N. 102–3221
STA. 220 + 11.00
SINGLE SPAN PPC
DECK BEAM BRIDGE
REPLACES S.N. 102–3143

ROADWAY IMPROVEMENT ENDS STA. 229 + 74.48
ROADWAY IMPROVEMENT BEGINS STA. 205 + 65.00

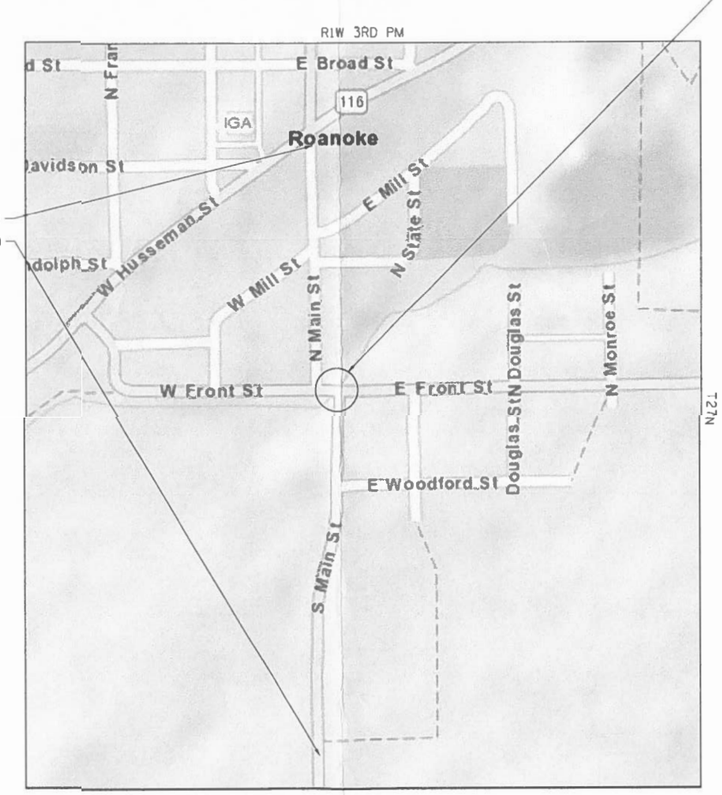

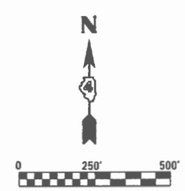

ROADWAY CLASSIFICATION: MAJOR COLLECTOR
CH 13 (FROM HWY DEPT TO ILL 116)
ADT 1455 (2037) – 88% PV, 12% TRUCKS
DESIGN SPEED : 30 MPH
DESIGN POLICY : URBAN & 3R GUIDELINES

GROSS LENGTH = NET LENGTH = 2409.7 FT. = 0.46 MILES
VARIANCES: SEE SHEET 2
COMMITMENTS: SEE SHEET 2

LOCATION OF SECTION INDICATED THUS: –

STATE OF ILLINOIS
DEPARTMENT OF TRANSPORTATION
DIVISION OF HIGHWAYS

APPROVED 10/18/2024 (date)
Woodford County Engineer

PASSED 11-13-2024 (date)
District 4 Engineer of Local Roads & Streets

RELEASING FOR BID BASED ON LIMITED REVIEW November 13, 2024 (date)
Region 3 Engineer

PRINTED BY THE AUTHORITY OF THE STATE OF ILLINOIS

JEFFRY D. SPILLER, P.E.
PE No. 062-057630
Exp. Date 11/30/2025
10/18/2024

JEFFRY D. SPILLER
062-057630
LICENSED PROFESSIONAL ENGINEER OF ILLINOIS

INDEX OF SHEETS

HIGHWAY STANDARDS

000001-08	STANDARD SYMBOLS, ABBREVIATIONS AND PATTERNS
001001-02	AREAS OF REINFORCEMENT BARS
001006	DECIMAL OF AN INCH AND OF A FOOT
280001-07	TEMPORARY EROSION CONTROL SYSTEMS
420001-10	PAVEMENT JOINTS
420406	PAVEMENT CONNECTOR (HMA) FOR BRIDGE APPROACH SLAB
424001-12	PERPENDICULAR CURB RAMPS FOR SIDEWALKS
515001-04	NAME PLATE FOR BRIDGES
542301-03	PRECAST REINFORCED CONCRETE FLARED END SECTION
601101-02	CONCRETE HEADWALL FOR PIPE UNDERDRAINS
606001-08	CONCRETE CURB TYPE B AND COMBINATION CONCRETE CURB AND GUTTER
630301-09	SHOULDER WIDENING FOR TYPE 1 GUARDRAIL TERMINALS
631031-18	TRAFFIC BARRIER TERMINAL, TYPE 6
666001-01	RIGHT OF WAY MARKERS
667101-02	PERMANENT SURVEY MARKERS
668001-01	U.S. GEOLOGICAL SURVEY AND NATIONAL GEODETIC SURVEY BENCHMARKS RESETTING METHOD
701001-02	OFF-RD OPERATIONS, 2L, 2W, MORE THAN 15' (4.5 m) AWAY
701006-05	OFF-RD OPERATIONS, 2L, 2W, 15' (4.5 m) TO 24" (600 mm) FROM PAVEMENT EDGE
701011-04	OFF-RD MOVING OPERATIONS, 2L, 2W, DAY ONLY
701201-05	LANE CLOSURE, 2L, 2W, DAY ONLY, FOR SPEEDS ≥ 45 MPH
701301-04	LANE CLOSURE, 2L, 2W, SHORT TIME OPERATIONS
701311-03	LANE CLOSURE 2L, 2W MOVING OPERATIONS-DAY ONLY
701326-04	LANE CLOSURE, 2L, 2W, PAVEMENT WIDENING, FOR SPEEDS ≥ 45 MPH
701801-06	SIDEWALK, CORNER OR CROSSWALK CLOSURE
701901-10	TRAFFIC CONTROL DEVICES
725001-01	OBJECT AND TERMINAL MARKERS
780001-05	TYPICAL PAVEMENT MARKINGS
782006-01	GUARDRAIL AND BARRIER WALL REFLECTOR MOUNTING DETAILS
B.L.R. 21-9	TYPICAL APPLICATION OF TRAFFIC CONTROL DEVICES FOR CONSTRUCTION ON RURAL LOCAL HIGHWAYS
B.L.R. 22-7	TYPICAL APPLICATION OF TRAFFIC CONTROL DEVICES FOR CONSTRUCTION ON RURAL LOCAL HIGHWAYS (TWO-LANE TWO WAY RURAL TRAFFIC) (ROAD CLOSED TO THRU TRAFFIC)

DESIGN VARIANCES

1. FRONT STREET STRUCTURE 1 FOOT CLEARANCE REQUIREMENT OF THE LOW BEAM EELVATION ABOVE THE DESIGN HIGH WATER ELEVATION.
2. ROADWAY OVERTOPPING FOR LESS THAN A 10-YEAR FLOOD FREQUENCY FROM APPROXIMATE STATION 220+00 TO STATION 227+50.
3. COMMERCIAL ENTRANCE WIDTH LOCATED AT STATION 226+32.13. COMBINES TWO CLOSELY SPACED ENTRANCES.
4. SAG VERTICAL CURVE AT STATION 226+40.00. THE K VALUE OF THE SAG VERTICAL CURVE IS 25.3 WHICH DOES NOT MEET A 30 MPH DESIGN SPEED.
5. DESIGN VEHICLE ENCROACHMENT AT THE IL 116 AND N. MAIN ST. (COUNTY HIGHWAY 13) INTERSECTION FOR THE RIGHT TURN FROM SB N. MAIN ST. ONTO WB IL 116 AND THE RIGHT TURN FROM WB IL 116 ONTO NB N. MAIN ST.

GENERAL NOTES

THE "STANDARD SPECIFICATIONS FOR ROAD AND BRIDGE CONSTRUCTION," ADOPTED JANUARY 1, 2022, AND THE "SUPPLEMENTAL SPECIFICATIONS AND RECURRING SPECIAL PROVISIONS" ADOPTED JANUARY 1, 2025, SHALL GOVERN THE CONSTRUCTION OF THE PROPOSED WORK EXCEPT AS MODIFIED BY THE DRAWINGS.

THE CONTRACTOR SHALL BE RESPONSIBLE FOR HAVING THE UTILITY COMPANIES LOCATE THEIR FACILITIES ON SITE PRIOR TO ANY CONSTRUCTION AND WILL BE HELD RESPONSIBLE FOR THE MAINTENANCE AND PRESERVATION OF THEIR FACILITIES. THE CONTRACTOR SHALL CALL J.U.L.I.E. @ 1-800-892-0123 FOR UTILITY LOCATIONS.

THE CONTRACTOR WILL BE RESPONSIBLE FOR REPAIRS TO ANY UTILITY LINES AND EXISTING IMPROVEMENTS TO REMAIN THAT ARE DAMAGED AS A RESULT OF THE WORK.

HOT-MIX ASPHALT MIXTURE REQUIREMENTS

LOCATION	ENTIRE JOB	ENTIRE JOB	CH 13 REHAB SECTION	CH 13 RECON SECTION	CH 13 REHAB SECTION
MIXTURE USE	POLYMER SURFACE	POLYMER BINDER (TOP LIFT)	POLYMER BINDER (VARIABLE DEPTH BUILD UP)	BINDER (BOTTOM LIFT)	BINDER (HMA BASE COURSE WIDENING)
AC/PG	SBS OR SBR 64-28	SBS OR SBR 64-28	SBS OR SBR 64-28	64-22	64-22
DESIGN AIR VOIDS	4.0% @ N=50	4.0% @ N=50	4.0% @ N=50	4.0% @ N=50	4.0% @ N=50
MIX COMP(GRADATION)	IL-9.5	IL-9.5	IL-9.5	IL-19.0	IL-19.0
FRICTION AGGREGATE	MIX C	N/A	N/A	N/A	N/A
MIXTURE WEIGHT	112	112	112	112	112
QUALITY MANAGEMENT PROGRAM	QC/QA	QC/QA	QC/QA	QC/QA	QC/QA
SUBLOT SIZE	N/A	N/A	N/A	N/A	N/A
MATERIAL TRANSFER DEVICE (REQUIRED?)	YES	YES	YES	YES	YES

NOTE:1) INDIVIDUAL LIFT THICKNESS OF EACH MIX TYPE WILL BE NO LESS THAN 3 TIMES NOMINAL MAXIMUM AGGREGATE SIZE AND NO MORE THAN 6 TIMES NOMINAL MAXIMUM AGGREGATE SIZE, UNLESS OTHERWISE APPROVED BY THE ENGINEER.

POLYMERIZED BITUMINOUS MATERIALS (TACK COAT) RATES

SURFACE TYPE:	RESIDUAL RATE
MILL (HMA OR PCC)	0.08 LB/SF
EXISTING PAVEMENT	0.08 LB/SF
FOG COAT (BETWEEN LIFTS)	0.08 LB/SF

ALL EXISTING SURROUNDING AREA AND PROPERTY SHALL BE PROTECTED FROM DAMAGE AND LEFT UNDAMAGED BY THE OPERATION OF THE CONTRACTOR. ANY OF THE SURROUNDING PROPERTY DAMAGED BY THE CONTRACTOR SHALL BE REPAIRED OR REPLACED TO AN EQUAL OR BETTER CONDITION THAN WHAT EXISTED PRIOR TO CONSTRUCTION AT THE CONTRACTOR'S EXPENSE.

ADJUSTMENTS OF PROPOSED GRADES TO MATCH EXISTING ENTRANCES OR OTHER FIELD CONDITIONS MAY BE REQUIRED AS DIRECTED BY THE ENGINEER.

THE CONTRACTOR SHALL FIELD VERIFY ALL DIMENSIONS AND EXISTING CONDITIONS PRIOR TO CONSTRUCTION AND NOTIFY THE ENGINEER OF ANY DISCREPANCY IMMEDIATELY.

THE SUMMARY OF QUANTITIES HAS BEEN PROVIDED FOR THE CONTRACTOR'S REFERENCE. CONTRACTOR IS ALERTED TO THE FACT THAT THESE NUMBERS ARE ESTIMATES, AND IT IS RECOMMENDED THAT THE CONTRACTOR VERIFY QUANTITIES PRIOR TO ORDERING MATERIALS.

EXCESS MATERIAL, IF NOT USED FOR OTHER ON-SITE PURPOSES, SHALL BE COMPLETELY REMOVED FROM THE CONSTRUCTION SITE AND DISPOSED OF OFF-SITE BY THE CONTRACTOR.

ACCESS MUST BE MAINTAINED TO ALL EXISTING PROPERTIES DURING CONSTRUCTION PER ARTICLE 107.09 OF THE I.D.O.T. STANDARD SPECIFICATIONS, UNLESS ARRANGEMENTS ARE MADE IN WRITING BY THE CONTRACTOR WITH THE PROPERTY OWNER WITH A COPY TO THE ENGINEER FOR SHORT-TERM CLOSURES.

EXISTING ROAD SIGNS THAT INTERFERE WITH THE CONSTRUCTION WILL BE RELOCATED BY THE WOODFORD COUNTY HIGHWAY DEPARTMENT. THE CONTRACTOR SHALL CONTACT THE WOODFORD COUNTY HIGHWAY DEPARTMENT MAINTENANCE FOREMAN AT (309) 923-2891 TWO (2) WEEKS PRIOR TO CONSTRUCTION ACTIVITIES THAT ARE TO BEGIN TO COORDINATE THE REMOVAL OF THESE SIGNS.

GENERAL NOTES (CONT.)

THE WORK AREA SHALL BE POSITIVELY DRAINED DURING CONSTRUCTION. FINAL GRADES SHALL BE PROTECTED AGAINST DAMAGE FROM EROSION, SEDIMENTATION, AND TRAFFIC.

CONSTRUCTION OPERATIONS SHALL BE CONDUCTED IN SUCH A MANNER THAT EROSION AND WATER POLLUTION WILL BE MINIMIZED.

EROSION CONTROL IS A REQUIREMENT OF THIS PROJECT. ANY FINES OR PENALTIES LEVIED AGAINST THIS PROJECT FOR NONCOMPLIANCE WILL BE BORNE SOLELY BY THE CONTRACTOR.

PERIMETER EROSION BARRIER, TEMPORARY DITCH CHECKS, AND OTHER EROSION CONTROL ITEMS SHALL BE INSPECTED BY THE CONTRACTOR AFTER EACH RAIN EVENT, AND REPAIRS SHALL BE MADE BY THE CONTRACTOR AS NEEDED.

THE CONTRACTOR SHALL CONSULT WITH THE ENGINEER IN REGARD TO THE EXACT LENGTH OF THE PIPE CULVERTS REQUIRED PRIOR TO ORDERING THESE ITEMS.

MICROSTATION AND GEOPAK FILES OF THIS PROJECT WILL BE MADE AVAILABLE TO THE CONTRACTOR AFTER CONTRACT AWARD. IF THERE IS A CONFLICT BETWEEN THE ELECTRONIC FILES AND THE PRINTED CONTRACT PLANS AND DOCUMENTS, THE PRINTED CONTRACT PLANS AND DOCUMENTS SHALL TAKE PRECEDENCE OVER THE ELECTRONIC FILES. THE CONTRACTOR SHALL ACCEPT ALL RISK ASSOCIATED WITH USING THE ELECTRONIC FILES AND SHALL HOLD THE COUNTY HARMLESS FOR ANY ERRORS OR OMISSIONS IN THE ELECTRONIC FILES AND THE DATA CONTAINED THEREIN. ERRORS OR DELAYS RESULTING FROM THE USE OF THE ELECTRONIC FILES BY THE CONTRACTOR SHALL NOT RESULT IN AN EXTENSION OF TIME FOR ANY INTERIM OR FINAL COMPLETION DATE OR SHALL NOT BE CONSIDERED CAUSE FOR ADDITIONAL COMPENSATION. THE CONTRACTOR SHALL NOT USE, SHARE, OR DISTRIBUTE THESE ELECTRONIC FILES EXCEPT FOR THE PURPOSE OF CONSTRUCTING THIS CONTRACT. ANY CLAIMS BY THIRD PARTIES DUE TO USE OR ERRORS SHALL BE THE SOLE RESPONSIBILITY OF THE CONTRACTOR. THE CONTRACTOR SHALL INCLUDE THIS DISCLAIMER WITH THE TRANSFER OF THESE ELECTRONIC FILES TO ANY OTHER PARTIES AND SHALL INCLUDE APPROPRIATE LANGUAGE BINDING THEM TO SIMILAR RESPONSIBILITIES.

ALL ELEVATIONS SHOWN ON THE PLANS ARE ESTABLISHED FROM U.S.G.S. MEAN SEA LEVEL DATUM.

CONTINUOUS PAVING OPERATIONS ON THE MAIN ROADWAY SHALL BE MAINTAINED AT ALL TIMES DURING THE CONSTRUCTION OF THE HOT-MIX ASPHALT SURFACE. NO INTERRUPTIONS FOR SIDE ROADS, ENTRANCES, TURN LANES, ETC. WILL BE ALLOWED.

A TYPE "B" FINAL FINISH, OBTAINED IN ACCORDANCE WITH ARTICLE 420.09(E)(2) OF THE STANDARD SPECIFICATIONS, SHALL BE PROVIDED FOR THE PORTLAND CEMENT CONCRETE PAVEMENT.

ENVIRONMENTAL REVIEWS

PRIOR TO THE USE OF ANY PROPOSED BORROW AREAS, USE AREAS (TEMPORARY ACCESS ROADS, DETOURS, RUN-AROUNDS, ETC.), AND/OR WASTE AREAS, THE CONTRACTOR SHALL FILE THE REQUIRED ENVIRONMENTAL RESOURCE REQUEST SURVEYS ACCORDING TO SECTION 107.22 OF THE STANDARD SPECIFICATIONS. THESE SURVEYS ARE REQUIRED IN ORDER FOR THE DEPARTMENT TO CONDUCT CULTURAL AND BIOLOGICAL RESOURCE SURVEYS FOR THE PROPOSED SITE.

PRIOR TO ANY WASTE MATERIALS BEING REMOVED FROM THE CONSTRUCTION SITE THE REQUIRED ENVIRONMENTAL RESOURCE SURVEYS WILL NEED TO BE OBTAINED AND FILED BY THE CONTRACTOR. EXCESS WASTE PRODUCTS REMOVED FROM THE CONSTRUCTION SITE SHALL BE DISPOSED OF AS REQUIRED IN SECTION 202.03 OF THE STANDARD SPECIFICATIONS.

ANY PROTRUDING METAL BARS SHALL BE REMOVED PRIOR TO THE DISPOSAL OF BROKEN CONCRETE AT APPROVED DISPOSAL SITES.

THE REQUIRED ENVIRONMENTAL RESOURCE DOCUMENTATION SHALL INCLUDE THE FOLLOWING:

- BDE FORM 2289 (CULTURAL AND NATURAL RESOURCES REVIEW OF BORROW AREAS)
- BDE FORM 2290 (WASTE/USE AREA REVIEW)
- A LOCATION MAP SHOWING THE SIZE LIMITS AND LOCATION OF THE USE AREA
- COLOR PHOTOGRAPHS DEPICTING THE USE AREA
- BORROW AREA ENTRY AGREEMENT FORM - D4 PI0101

PLEASE NOTE THAT A MINIMUM OF FOUR (4) WEEKS SHALL BE ALLOWED FOR THE COUNTY TO OBTAIN THE REQUIRED WASTE SITE ENVIRONMENTAL CLEARANCES AND SIX (6) WEEKS FOR THE REQUIRED BORROW SITE ENVIRONMENTAL CLEARANCES.

COMMITMENTS

1. TREES GREATER THAN 6 INCHES (DIAMETER AT BREAST HEIGHT) IMPACTED WITHIN THE CONSTRUCTION LIMITS OF THE PROPOSED FRONT STREET INTERSECTION IMPROVEMENTS WILL BE REPLACED AT A RATIO OF 1:1 WITH RPM (ROOT PRODUCTION METHOD) TREES AND PLANTED AT A TO-BE-SELECTED AREA BY THE ROANOKE PARK DISTRICT WITHIN THE AFFECTED PROPERTIES.
2. THE COAL MINER'S MEMORIAL SHALL BE RELOCATED DURING CONSTRUCTION. THE CONTRACTOR SHALL COORDINATE WITH THE WOODFORD COUNTY HIGHWAY DEPARTMENT AND THE ROANOKE PARK DISTRICT ON THE RELOCATION.

	CODE NO.	ITEM	UNIT	TOTAL QUANTITY	CONSTRUCTION CODE STR FUNDS 80% STATE / 20% CITY ROADWAY 0004 RURAL/URBAN	CONSTRUCTION CODE ISBG FUNDS 80% STATE / 20% CITY STRUCTURE 0010 URBAN
*	20100110	TREE REMOVAL (6 TO 15 UNITS DIAMETER)	UNIT	8	0	8
*	20100210	TREE REMOVAL (OVER 15 UNITS DIAMETER)	UNIT	140	0	140
	20200100	EARTH EXCAVATION	CU YD	3,515	2,365	1,150
	20300100	CHANNEL EXCAVATION	CU YD	2,100	0	2,100
	20400800	FURNISHED EXCAVATION	CU YD	495	0	495
	20800150	TRENCH BACKFILL	CU YD	536	381	155
	21101615	TOPSOIL FURNISH AND PLACE, 4"	SQ YD	11,008	5,956	5,052
	21301060	EXPLORATION TRENCH 60" DEPTH	FOOT	231	0	231
*	25000210	SEEDING, CLASS 2A	ACRE	2.50	1.25	1.25
*	25000400	NITROGEN FERTILIZER NUTRIENT	POUND	207	113	94
*	25000500	PHOSPHORUS FERTILIZER NUTRIENT	POUND	207	113	94
*	25000600	POTASSIUM FERTILIZER NUTRIENT	POUND	207	113	94
*	25100115	MULCH, METHOD 2	ACRE	2.00	1.25	0.75
*	25100630	EROSION CONTROL BLANKET	SQ YD	1,777	0	1,777
	28000250	TEMPORARY EROSION CONTROL SEEDING	POUND	691	376	315
	28000305	TEMPORARY DITCH CHECKS	FOOT	210	210	0
	28000400	PERIMETER EROSION BARRIER	FOOT	3,865	3,031	834
	28000500	INLET AND PIPE PROTECTION	EACH	5	4	1
	28000510	INLET FILTERS	EACH	22	16	6
	28100105	STONE RIPRAP, CLASS A3	SQ YD	31	31	0

* SPECIALTY ITEMS

MODEL: Default
FILE NAME: S:\037\2016\3716012-22 \Woodford Co CH 13 at Front St Ph III\CADD\CADD Sheets\0416012-sht-Summary.dgn

MAURER-STUTZ ENGINEERS SURVEYORS

USER NAME = jdspiller	DESIGNED - CLD	REVISED -
	DRAWN - CAD	REVISED -
PLOT SCALE = 0.1667 ' / in.	CHECKED - JDS	REVISED -
PLOT DATE = 11/12/2024	DATE - 10/18/2024	REVISED -

WOODFORD COUNTY
HIGHWAY DEPARTMENT

COUNTY HIGHWAY 13 RECONSTRUCTION AT FRONT ST.
SUMMARY OF QUANTITIES

SCALE: | SHEET 1 OF 8 SHEETS | STA. TO STA.

F.A.S. RTE.	SECTION	COUNTY	TOTAL SHEETS	SHEET NO.
364	20-00091-03-BR	WOODFORD	114	3

CONTRACT NO. 89854

CODE NO.	ITEM	UNIT	TOTAL QUANTITY	CONSTRUCTION CODE STR FUNDS 80% STATE / 20% CITY ROADWAY 0004 RURAL/URBAN	CONSTRUCTION CODE ISBG FUNDS 80% STATE / 20% CITY STRUCTURE 0010 URBAN
28100107	STONE RIPRAP, CLASS A4	SQ YD	738	0	738
28200200	FILTER FABRIC	SQ YD	764	36	728
28500400	ARTICULATED BLOCK REVETMENT MAT	SQ YD	215	0	215
30300001	AGGREGATE SUBGRADE IMPROVEMENT	CU YD	3,303	2,224	1,079
35100100	AGGREGATE BASE COURSE, TYPE A	TON	3,289	2,327	962
35600650	HOT-MIX ASPHALT BASE COURSE WIDENING, 4"	SQ YD	342	342	0
40200700	AGGREGATE SURFACE COURSE, TYPE A 8"	SQ YD	79	51	28
40600275	BITUMINOUS MATERIALS (PRIME COAT)	POUND	21,135	14,800	6,335
40600295	POLYMERIZED BITUMINOUS MATERIALS (TACK COAT)	POUND	13,882	10,221	3,661
40600405	MATERIAL TRANSFER DEVICE	TON	2,817	2,108	709
40600982	HOT-MIX ASPHALT SURFACE REMOVAL - BUTT JOINT	SQ YD	266	209	57
40603080	HOT-MIX ASPHALT BINDER COURSE, IL-19.0, N50	TON	1,161	822	339
40603205	POLYMERIZED HOT-MIX ASPHALT BINDER COURSE, IL-9.5, N50	TON	683	529	154
40604150	POLYMERIZED HOT-MIX ASPHALT SURFACE COURSE, IL-9.5, MIX "C", N50	TON	895	676	219
42000070	PAVEMENT CONNECTOR (HMA) FOR BRIDGE APPROACH SLAB	SQ YD	188	0	188
42300200	PORTLAND CEMENT CONCRETE DRIVEWAY PAVEMENT, 6 INCH	SQ YD	315	281	34
42300400	PORTLAND CEMENT CONCRETE DRIVEWAY PAVEMENT, 8 INCH	SQ YD	646	646	0
42400100	PORTLAND CEMENT CONCRETE SIDEWALK 4 INCH	SQ FT	6,687	3,729	2,958
42400800	DETECTABLE WARNINGS	SQ FT	122	68	54
44000100	PAVEMENT REMOVAL	SQ YD	9,558	6,331	3,227

* SPECIALTY ITEMS

CODE NO.	ITEM	UNIT	TOTAL QUANTITY	CONSTRUCTION CODE STR FUNDS 80% STATE / 20% CITY ROADWAY 0004 RURAL/URBAN	CONSTRUCTION CODE ISBG FUNDS 80% STATE / 20% CITY STRUCTURE 0010 URBAN
44000200	DRIVEWAY PAVEMENT REMOVAL	SQ YD	985	944	41
44000500	COMBINATION CURB AND GUTTER REMOVAL	FOOT	935	100	835
44000600	SIDEWALK REMOVAL	SQ FT	4,254	2,480	1,774
48101500	AGGREGATE SHOULDERS, TYPE B 6"	SQ YD	833	833	0
48203020	HOT-MIX ASPHALT SHOULDERS, 5 3/4"	SQ YD	1,798	1,174	624
50100100	REMOVAL OF EXISTING STRUCTURES	EACH	1	0	1
50104400	CONCRETE HEADWALL REMOVAL	EACH	2	2	0
50105220	PIPE CULVERT REMOVAL	FOOT	252	252	0
50200100	STRUCTURE EXCAVATION	CU YD	176	0	176
50300225	CONCRETE STRUCTURES	CU YD	103	0	103
50300255	CONCRETE SUPERSTRUCTURE	CU YD	44.2	0	44.2
50300260	BRIDGE DECK GROOVING	SQ YD	575	0	575
50300280	CONCRETE ENCASEMENT	CU YD	9.2	0	9.2
50300300	PROTECTIVE COAT	SQ YD	794	0	794
50301350	CONCRETE SUPERSTRUCTURE (APPROACH SLAB)	CU YD	152.9	0	152.9
50400505	PRECAST PRESTRESSED CONCRETE DECK BEAMS (27" DEPTH)	SQ FT	3,236	0	3,236
50800105	REINFORCEMENT BARS	POUND	30	30	0
50800205	REINFORCEMENT BARS, EPOXY COATED	POUND	90,030	0	90,030
* 50900105	ALUMINUM RAILING, TYPE L	FOOT	60	0	60
51200957	FURNISHING METAL SHELL PILES 12" X 0.250"	FOOT	540	0	540

* SPECIALTY ITEMS

MODEL: Default
FILE NAME: S:\037\2016\2371601\22 \Woodford Co CH 13 at Front St Ph III\CADD\CADD Sheets\041601-sht-Summary.dgn

MAURER-STUTZ ENGINEERS SURVEYORS

USER NAME = jdspiller	DESIGNED - CLD	REVISED -
	DRAWN - CAD	REVISED -
PLOT SCALE = 0.1667 ' / in.	CHECKED - JDS	REVISED -
PLOT DATE = 11/12/2024	DATE - 10/18/2024	REVISED -

WOODFORD COUNTY HIGHWAY DEPARTMENT

COUNTY HIGHWAY 13 RECONSTRUCTION AT FRONT ST.
SUMMARY OF QUANTITIES

SCALE: | SHEET 3 OF 8 SHEETS | STA. TO STA.

F.A.S. RTE.	SECTION	COUNTY	TOTAL SHEETS	SHEET NO.
364	20-00091-03-BR	WOODFORD	114	5

CONTRACT NO. 89854

CODE NO.	ITEM	UNIT	TOTAL QUANTITY	CONSTRUCTION CODE STR FUNDS 80% STATE / 20% CITY ROADWAY 0004 RURAL/URBAN	CONSTRUCTION CODE ISBG FUNDS 80% STATE / 20% CITY STRUCTURE 0010 URBAN
51202305	DRIVING PILES	FOOT	540	0	540
51203200	TEST PILE METAL SHELLS	EACH	2	0	2
51204650	PILE SHOES	EACH	20	0	20
51500100	NAME PLATES	EACH	1	0	1
54001001	BOX CULVERT END SECTIONS, CULVERT NO. 1	EACH	1	1	0
54213654	PRECAST REINFORCED CONCRETE FLARED END SECTIONS 8"	EACH	1	0	1
54213657	PRECAST REINFORCED CONCRETE FLARED END SECTIONS 12"	EACH	1	0	1
54213660	PRECAST REINFORCED CONCRETE FLARED END SECTIONS 15"	EACH	3	0	3
54213663	PRECAST REINFORCED CONCRETE FLARED END SECTIONS 18"	EACH	1	0	1
54248510	CONCRETE COLLAR	CU YD	0.4	0.4	0.0
54262715	METAL FLARED END SECTIONS 15"	EACH	4	4	0
54262836	METAL FLARED END SECTIONS, EQUIVALENT ROUND-SIZE 36"	EACH	1	1	0
542C0220	PIPE CULVERTS, CLASS C, TYPE 1 15"	FOOT	103	103	0
550A4500	STORM SEWERS, CLASS A, TYPE 1 EQUIVALENT ROUND-SIZE 36"	FOOT	101	101	0
550B0050	STORM SEWERS, CLASS B, TYPE 1 12"	FOOT	155	155	0
550B0070	STORM SEWERS, CLASS B, TYPE 1 15"	FOOT	92	25	67
550B0340	STORM SEWERS, CLASS B, TYPE 2 12"	FOOT	38	38	0
550B0360	STORM SEWERS, CLASS B, TYPE 2 15"	FOOT	124	38	86
550B0380	STORM SEWERS, CLASS B, TYPE 2 18"	FOOT	502	329	173
55100700	STORM SEWER REMOVAL 15"	FOOT	648	48	600

* SPECIALTY ITEMS

MODEL: Default
FILE NAME: S:\037\2016\3716012-22 \Woodford Co CH 13 at Front St Ph III\CADD\CADD Sheets\0416012-sht-Summary.dgn

MAURER-STUTZ ENGINEERS SURVEYORS

USER NAME = jdspiller	DESIGNED - CLD	REVISED -
	DRAWN - CAD	REVISED -
PLOT SCALE = 0.1667 ' / in.	CHECKED - JDS	REVISED -
PLOT DATE = 11/12/2024	DATE - 10/18/2024	REVISED -

WOODFORD COUNTY HIGHWAY DEPARTMENT

COUNTY HIGHWAY 13 RECONSTRUCTION AT FRONT ST.
SUMMARY OF QUANTITIES

SCALE: | SHEET 4 OF 8 SHEETS | STA. TO STA.

F.A.S. RTE.	SECTION	COUNTY	TOTAL SHEETS	SHEET NO.
364	20-00091-03-BR	WOODFORD	114	6

CONTRACT NO. 89854

CODE NO.	ITEM	UNIT	TOTAL QUANTITY	CONSTRUCTION CODE STR FUNDS 80% STATE / 20% CITY ROADWAY 0004 RURAL/URBAN	CONSTRUCTION CODE ISBG FUNDS 80% STATE / 20% CITY STRUCTURE 0010 URBAN
58600101	GRANULAR BACKFILL FOR STRUCTURES	CU YD	185	0	185
59100100	GEOCOMPOSITE WALL DRAIN	SQ YD	77	0	77
60100060	CONCRETE HEADWALLS FOR PIPE DRAINS	EACH	6	1	5
60146304	PIPE UNDERDRAINS FOR STRUCTURES 4"	FOOT	182	0	182
60219300	MANHOLES, TYPE A, 4'-DIAMETER, TYPE 11 FRAME AND GRATE	EACH	2	1	1
60234200	INLETS, TYPE A, TYPE 1 FRAME, OPEN LID	EACH	1	0	1
60240215	INLETS, TYPE B, TYPE 1 FRAME, CLOSED LID	EACH	1	1	0
60240310	INLETS, TYPE B, TYPE 11 FRAME AND GRATE	EACH	3	1	2
60240312	INLETS, TYPE B, TYPE 11V FRAME AND GRATE	EACH	7	4	3
60255500	MANHOLES TO BE ADJUSTED	EACH	7	5	2
60258200	MANHOLES TO BE RECONSTRUCTED WITH NEW TYPE 1 FRAME, CLOSED LID	EACH	1	1	0
60260100	INLETS TO BE ADJUSTED	EACH	2	2	0
60260400	INLETS TO BE ADJUSTED WITH NEW TYPE 1 FRAME, CLOSED LID	EACH	1	1	0
60260505	INLETS TO BE ADJUSTED WITH NEW TYPE 3V FRAME AND GRATE	EACH	1	1	0
60261320	INLETS TO BE ADJUSTED WITH NEW TYPE 11V FRAME AND GRATE	EACH	1	1	0
60263000	INLETS TO BE RECONSTRUCTED WITH NEW TYPE 1 FRAME, CLOSED LID	EACH	1	1	0
60500040	REMOVING MANHOLES	EACH	1	0	1
60500060	REMOVING INLETS	EACH	10	3	7
60603800	COMBINATION CONCRETE CURB AND GUTTER, TYPE B-6.12	FOOT	3,275	2,206	1,069
60604300	COMBINATION CONCRETE CURB AND GUTTER, TYPE B-6.12 (VARIABLE WIDTH GUTTER FLAG)	FOOT	124	5	119

* SPECIALTY ITEMS

MODEL: Default
FILE NAME: S:\037\2016\2371601\22 \Woodford Co CH 13 at Front St Ph III\CADD\CADD Sheets\041601-sht-Summary.dgn

MAURER-STUTZ ENGINEERS SURVEYORS

USER NAME = jdspiller	DESIGNED - CLD	REVISED -
	DRAWN - CAD	REVISED -
PLOT SCALE = 0.1667 ' / in.	CHECKED - JDS	REVISED -
PLOT DATE = 11/12/2024	DATE - 10/18/2024	REVISED -

WOODFORD COUNTY HIGHWAY DEPARTMENT

COUNTY HIGHWAY 13 RECONSTRUCTION AT FRONT ST.
SUMMARY OF QUANTITIES

SCALE: SHEET 5 OF 8 SHEETS STA. TO STA.

F.A.S. RTE.	SECTION	COUNTY	TOTAL SHEETS	SHEET NO.
364	20-00091-03-BR	WOODFORD	114	7

CONTRACT NO. 89854

	CODE NO.	ITEM	UNIT	TOTAL QUANTITY	CONSTRUCTION CODE STR FUNDS 80% STATE / 20% CITY ROADWAY 0004 RURAL/URBAN	CONSTRUCTION CODE ISBG FUNDS 80% STATE / 20% CITY STRUCTURE 0010 URBAN
	60605000	COMBINATION CONCRETE CURB AND GUTTER, TYPE B-6.24	FOOT	109	109	0
*	63000001	STEEL PLATE BEAM GUARDRAIL, TYPE A, 6 FOOT POSTS	FOOT	25	0	25
*	63100045	TRAFFIC BARRIER TERMINAL, TYPE 2	EACH	2	0	2
*	63100085	TRAFFIC BARRIER TERMINAL, TYPE 6	EACH	2	0	2
	63200310	GUARDRAIL REMOVAL	FOOT	238	0	238
	66700205	PERMANENT SURVEY MARKERS, TYPE I	EACH	1	1	0
	66700305	PERMANENT SURVEY MARKERS, TYPE II	EACH	1	0	1
*	66900200	NON-SPECIAL WASTE DISPOSAL	CU YD	767	767	0
*	66900530	SOIL DISPOSAL ANALYSIS	EACH	1	1	0
*	66901001	REGULATED SUBSTANCES PRE-CONSTRUCTION PLAN	L SUM	1	1	0
*	66901003	REGULATED SUBSTANCES FINAL CONSTRUCTION REPORT	L SUM	1	1	0
*	66901006	REGULATED SUBSTANCES MONITORING	CAL DA	10	10	0
	67000400	ENGINEER'S FIELD OFFICE, TYPE A	CAL MO	14	7	7
	67100100	MOBILIZATION	L SUM	1	0.5	0.5
	70103815	TRAFFIC CONTROL SURVEILLANCE	CAL DA	100	40.0	60.0
	70300150	SHORT TERM PAVEMENT MARKING REMOVAL	SQ FT	3,730	2,871	859
	70300221	TEMPORARY PAVEMENT MARKING - LINE 4"- PAINT	FOOT	11,048	7,859	3,189
	70300241	TEMPORARY PAVEMENT MARKING - LINE 6"- PAINT	FOOT	177	177	0
	70300261	TEMPORARY PAVEMENT MARKING - LINE 12"- PAINT	FOOT	127	127	0
	70300281	TEMPORARY PAVEMENT MARKING - LINE 24"- PAINT	FOOT	46	18	28

* SPECIALTY ITEMS

MODEL: Default
FILE NAME: S:\037\2016\3716012-22 \Woodford Co CH 13 at Front St Ph III\CADD\CADD Sheets\0416012-sht-Summary.dgn

MAURER-STUTZ ENGINEERS SURVEYORS

USER NAME = jdspiller	DESIGNED - CLD	REVISED -
	DRAWN - CAD	REVISED -
PLOT SCALE = 0.1667 ' / in.	CHECKED - JDS	REVISED -
PLOT DATE = 11/12/2024	DATE - 10/18/2024	REVISED -

WOODFORD COUNTY HIGHWAY DEPARTMENT

COUNTY HIGHWAY 13 RECONSTRUCTION AT FRONT ST.
SUMMARY OF QUANTITIES

SCALE: | SHEET 6 OF 8 SHEETS | STA. TO STA.

F.A.S. RTE.	SECTION	COUNTY	TOTAL SHEETS	SHEET NO.
364	20-00091-03-BR	WOODFORD	114	8

CONTRACT NO. 89854

	CODE NO.	ITEM	UNIT	TOTAL QUANTITY	CONSTRUCTION CODE STR FUNDS 80% STATE / 20% CITY ROADWAY 0004 RURAL/URBAN	CONSTRUCTION CODE ISBG FUNDS 80% STATE / 20% CITY STRUCTURE 0010 URBAN
*	72000100	SIGN PANEL - TYPE 1	SQ FT	24	5	19
*	72000200	SIGN PANEL - TYPE 2	SQ FT	10	0	10
*	72501000	TERMINAL MARKER - DIRECT APPLIED	EACH	2	0	2
*	72900100	METAL POST - TYPE A	FOOT	76	13	63
*	78001110	PAINT PAVEMENT MARKING - LINE 4"	FOOT	11,048	7,859	3,189
*	78001130	PAINT PAVEMENT MARKING - LINE 6"	FOOT	177	177	0
*	78001150	PAINT PAVEMENT MARKING - LINE 12"	FOOT	127	127	0
*	78001180	PAINT PAVEMENT MARKING - LINE 24"	FOOT	46	18	28
*	78200005	GUARDRAIL REFLECTORS, TYPE A	EACH	8	0	8
*	A2001016	TREE, ACER RUBRUM (RED MAPLE), 2" CALIPER, BALLED AND BURLAPPED	EACH	1	0	1
*	D2002248	EVERGREEN, PICEA PUNGENS GLAUCA (COLORADO BLUE SPRUCE), 4' HEIGHT, BALLED AND BURLAPPED	EACH	1	0	1
*	LR631020	TRAFFIC BARRIER TERMINAL, TYPE 1	EACH	2	0	2
	X2010404	STUMP REMOVAL	EACH	3	0	3
	X4401198	HOT-MIX ASPHALT SURFACE REMOVAL, VARIABLE DEPTH	SQ YD	929	929	0
	X5030305	CONCRETE WEARING SURFACE, 5"	SQ YD	364	0	364
	X6022230	MANHOLES, TYPE A, 4'-DIAMETER, WITH SPECIAL FRAME AND GRATE	EACH	2	2	0
	X6022930	MANHOLES, TYPE A, 5'-DIAMETER, WITH SPECIAL FRAME AND GRATE	EACH	1	1	0
	X6024502	INLETS, TYPE B, WITH SPECIAL FRAME AND GRATE	EACH	2	2	0
	X6060032	CONCRETE GUTTER TRANSITION	FOOT	42	20	22
	X6063000	CONCRETE GUTTER, TYPE B (SPECIAL)	FOOT	88	57	31

* SPECIALTY ITEMS

MODEL: Default
FILE NAME: S:\037\2016\2371601\22 \Woodford Co CH 13 at Front St Ph III\CADD\CADD Sheets\0416012-sht-Summary.dgn

MAURER-STUTZ ENGINEERS SURVEYORS

USER NAME = jdspiller	DESIGNED - CLD	REVISED -
	DRAWN - CAD	REVISED -
PLOT SCALE = 0.1667 ' / in.	CHECKED - JDS	REVISED -
PLOT DATE = 11/12/2024	DATE - 10/18/2024	REVISED -

WOODFORD COUNTY HIGHWAY DEPARTMENT

COUNTY HIGHWAY 13 RECONSTRUCTION AT FRONT ST.
SUMMARY OF QUANTITIES

SCALE: | SHEET 7 OF 8 SHEETS | STA. TO STA.

F.A.S. RTE.	SECTION	COUNTY	TOTAL SHEETS	SHEET NO.
364	20-00091-03-BR	WOODFORD	114	9

CONTRACT NO. 89854

	CODE NO.	ITEM	UNIT	TOTAL QUANTITY	CONSTRUCTION CODE STR FUNDS 80% STATE / 20% CITY ROADWAY 0004 RURAL/URBAN	CONSTRUCTION CODE ISBG FUNDS 80% STATE / 20% CITY STRUCTURE 0010 URBAN
	X6640104	FENCE REMOVAL	FOOT	118	0	118
	X7010216	TRAFFIC CONTROL AND PROTECTION, (SPECIAL)	L SUM	1	0.5	0.5
	Z0004522	HOT-MIX ASPHALT DRIVEWAY PAVEMENT, 6"	SQ YD	364	352	12
	Z0013798	CONSTRUCTION LAYOUT	L SUM	1	0.5	0.5
	Z0056669	STORM SEWERS, TYPE 2, WATER MAIN QUALITY PIPE, 15"	FOOT	300	0	300
#	Z0076600	TRAINEES	HOUR	1,500		
	Z0070150	REMOVE AND RELOCATE EXISTING MONUMENT	EACH	1	0	1
#	Z0076604	TRAINEES TRAINING PROGRAM GRADUATE	HOUR	1,500		

* SPECIALTY ITEMS

0042

MODEL: Default
FILE NAME: S:\23\2016\23716012.22 (Woodford Co CH 13 at Front St Ph III)\CADD\CADD Sheets\D416012-sht-Summary.dgn

MAURER-STUTZ ENGINEERS SURVEYORS

USER NAME = jdspiller	DESIGNED - CLD	REVISED -	
	DRAWN - CAD	REVISED -	
PLOT SCALE = 0.1667 ' / in.	CHECKED - JDS	REVISED -	
PLOT DATE = 11/12/2024	DATE - 10/18/2024	REVISED -	

WOODFORD COUNTY
HIGHWAY DEPARTMENT

COUNTY HIGHWAY 13 RECONSTRUCTION AT FRONT ST.
SUMMARY OF QUANTITIES

SCALE: | SHEET 8 OF 8 SHEETS | STA. TO STA.

F.A.S. RTE.	SECTION	COUNTY	TOTAL SHEETS	SHEET NO.
364	20-00091-03-BR	WOODFORD	114	10
		CONTRACT NO. 89854		

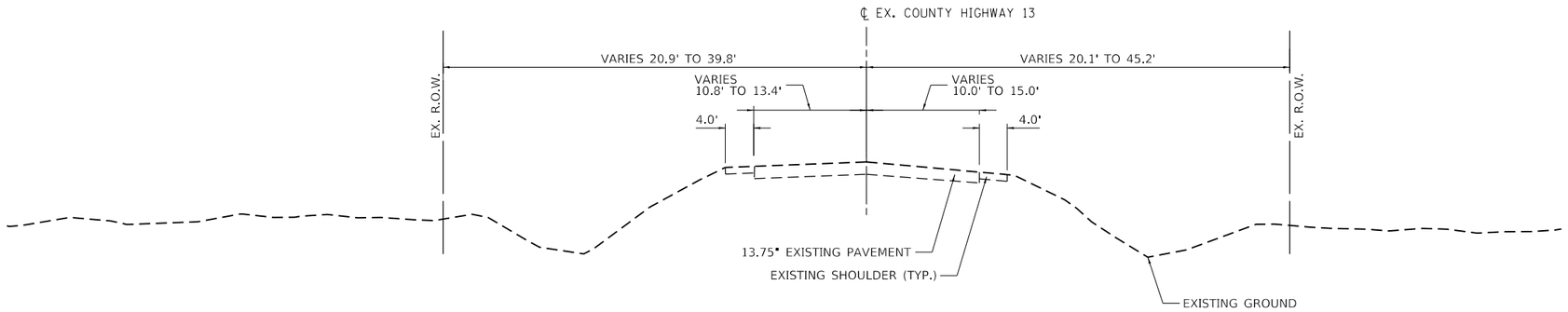

EXISTING TYPICAL SECTION
STA. 205+62.27 TO STA. 220+04.44
STATION EQUATION: STA. 220+04.44 (BK) = STA. 225+00.00 (AH)

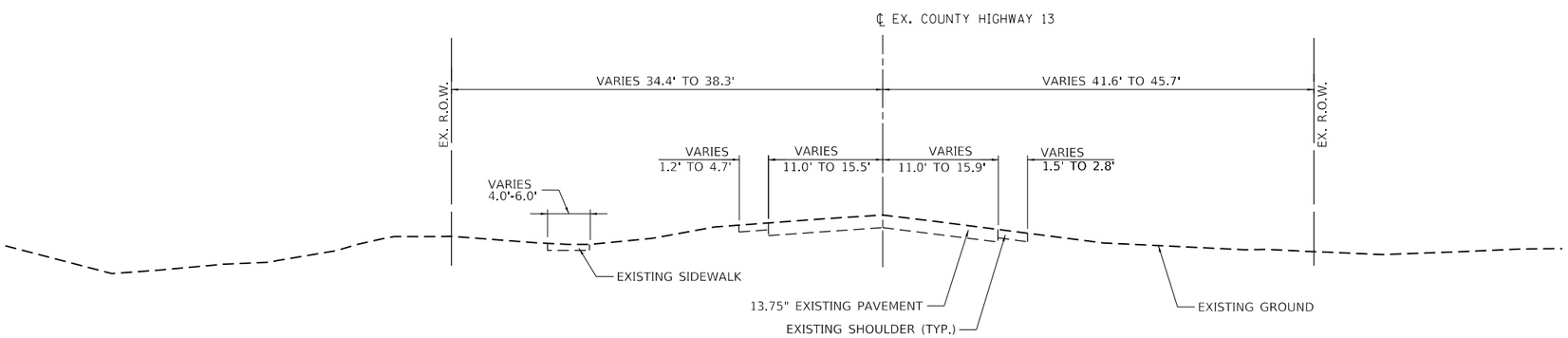

EXISTING TYPICAL SECTION
STA. 225+00.00 TO STA. 234+56.60

MODEL: Default
FILE NAME: S:\237\2016\237160\2.22 (Woodford Co CH 13 at Front St Ph III)\CADD\CADD Sheets\D416012-sht-typical sections.dgn

MAURER-STUTZ ENGINEERS SURVEYORS	USER NAME = jdspiller	DESIGNED - CLD	REVISED -	WOODFORD COUNTY HIGHWAY DEPARTMENT	COUNTY HIGHWAY 13 RECONSTRUCTION AT FRONT ST. TYPICAL SECTIONS		F.A.S. RTE.	SECTION	COUNTY	TOTAL SHEETS / SHEET NO.
		DRAWN - CAD	REVISED -				364	20-00091-03-BR	WOODFORD	114 / 11
	PLOT SCALE = 10.0000 ' / in.	CHECKED - JDS	REVISED -						CONTRACT NO. 89854	
	PLOT DATE = 11/12/2024	DATE - 10/18/2024	REVISED -		SCALE:	SHEET 1 OF 4 SHEETS	STA.	TO STA.		

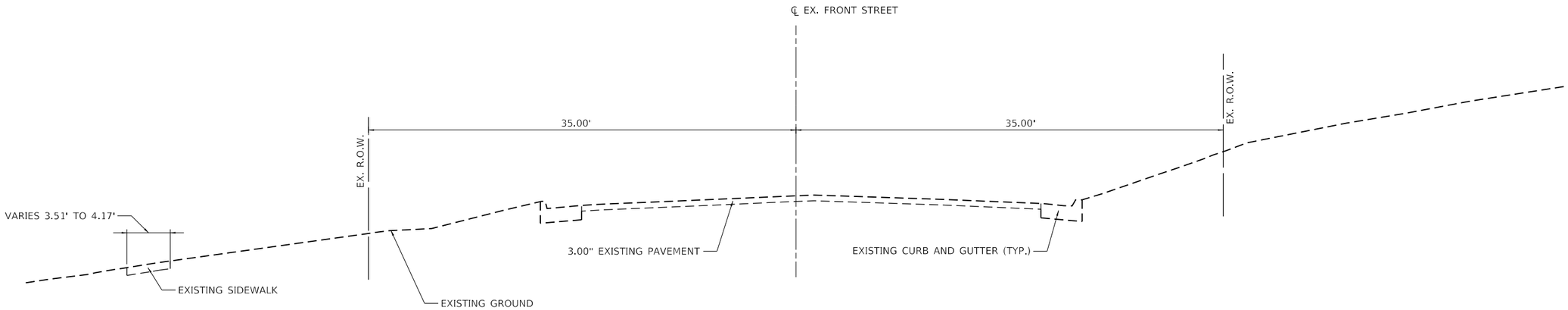

EXISTING TYPICAL SECTION
STA. 16+34.91 TO STA. 21+70.60

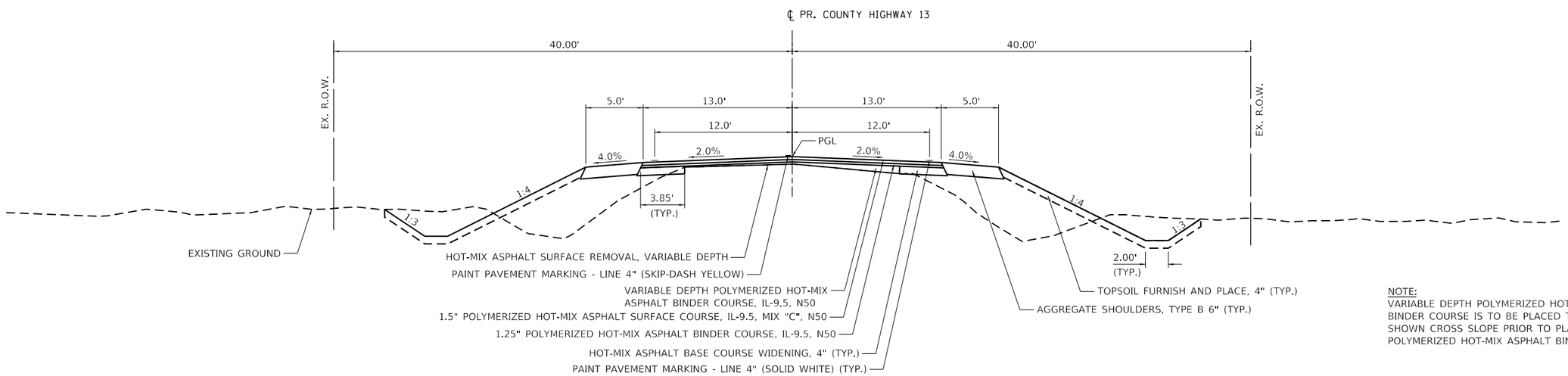

PROPOSED TYPICAL SECTION
STA. 205+65.00 TO STA. 210+00.00

NOTE:
VARIABLE DEPTH POLYMERIZED HOT-MIX ASPHALT BINDER COURSE IS TO BE PLACED TO PROVIDE SHOWN CROSS SLOPE PRIOR TO PLACEMENT OF 1.25" POLYMERIZED HOT-MIX ASPHALT BINDER COURSE.

MODEL: Default
FILE NAME: S:\237\2016\23716012.22 (Woodford Co CH 13 at Front St Ph III)\CADD\CADD Sheets\D416012-sht-typical sections.dgn

MAURER-STUTZ ENGINEERS SURVEYORS	USER NAME = jdspiller	DESIGNED - CLD	REVISED -	WOODFORD COUNTY HIGHWAY DEPARTMENT	COUNTY HIGHWAY 13 RECONSTRUCTION AT FRONT ST. TYPICAL SECTIONS			F.A.S. RTE.	SECTION	COUNTY	TOTAL SHEETS / SHEET NO.
		DRAWN - CAD	REVISED -					364	20-00091-03-BR	WOODFORD	114 / 12
	PLOT SCALE = 10.0000 ' / in.	CHECKED - JDS	REVISED -							CONTRACT NO. 89854	
	PLOT DATE = 11/12/2024	DATE - 10/18/2024	REVISED -		SCALE:	SHEET 2 OF 4 SHEETS	STA. TO STA.				

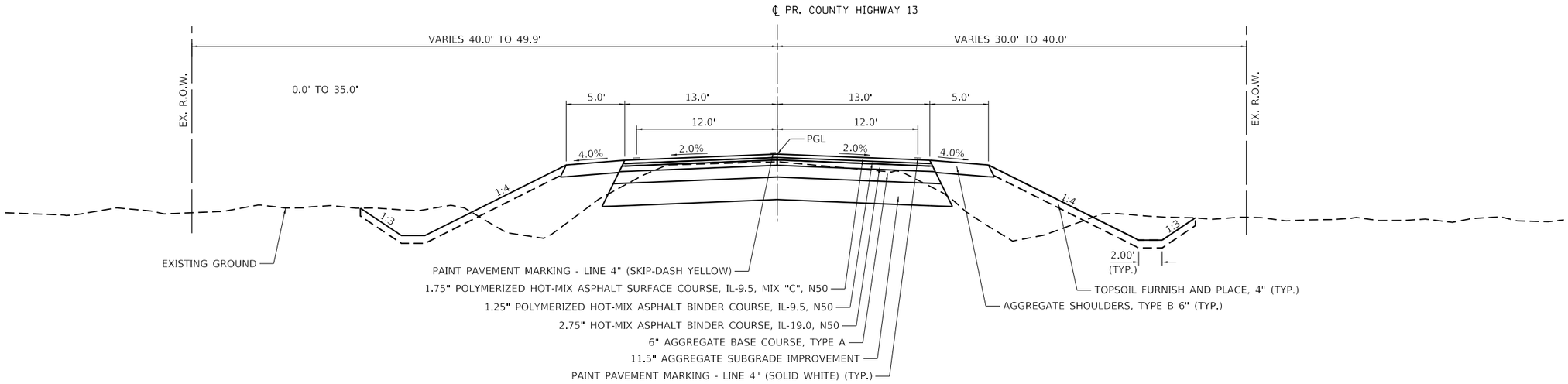

PROPOSED TYPICAL SECTION
STA. 210+00.00 TO STA. 214+29.72

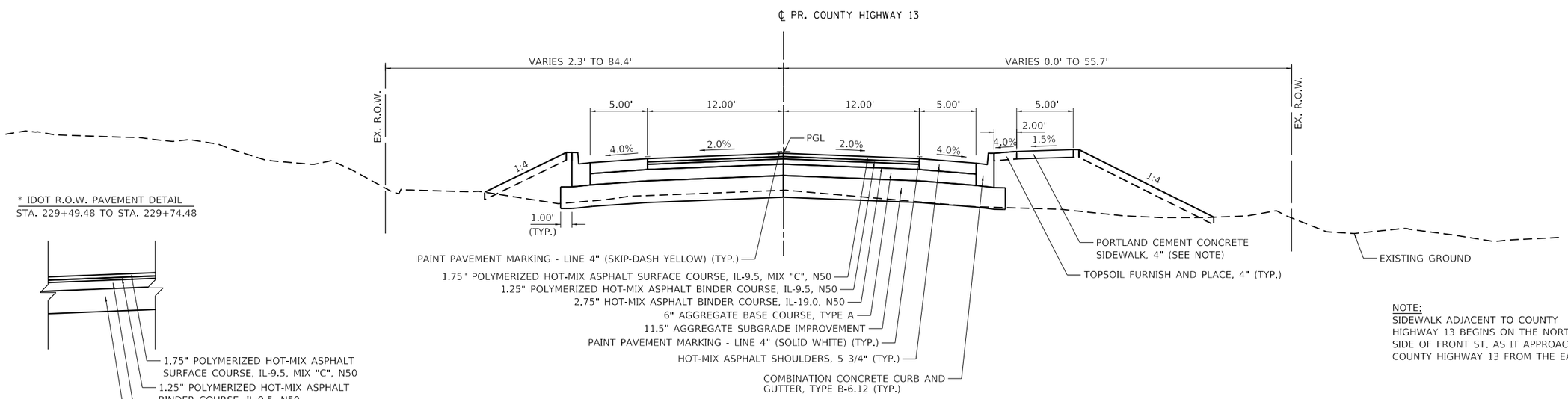

* IDOT R.O.W. PAVEMENT DETAIL
STA. 229+49.48 TO STA. 229+74.48

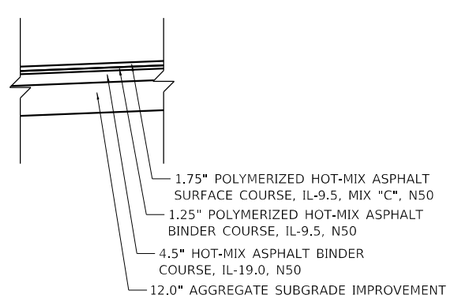

PROPOSED TYPICAL SECTION
STA. 214+29.72 TO STA. 219+47.91
STRUCTURE OMISSION: STA. 219+47.91 TO STA. 220+74.07
STA. 220+74.07 TO STA. 229+74.48*

NOTE:
SIDEWALK ADJACENT TO COUNTY HIGHWAY 13 BEGINS ON THE NORTH SIDE OF FRONT ST. AS IT APPROACHES COUNTY HIGHWAY 13 FROM THE EAST

MODEL: Default
FILE NAME: S:\237\2016\23716012.22 \Woodford Co CH 13 at Front St Ph III\CADD\CADD Sheets\D416012-sht-typical sections.dgn

MAURER-STUTZ ENGINEERS SURVEYORS

USER NAME = jdspiller	DESIGNED - CLD	REVISED -	
	DRAWN - CAD	REVISED -	
PLOT SCALE = 10.0000 ' / in.	CHECKED - JDS	REVISED -	
PLOT DATE = 11/12/2024	DATE - 10/18/2024	REVISED -	

WOODFORD COUNTY HIGHWAY DEPARTMENT

COUNTY HIGHWAY 13 RECONSTRUCTION AT FRONT ST.
TYPICAL SECTIONS

SCALE: | SHEET 3 OF 4 SHEETS | STA. | TO STA.

F.A.S. RTE.	SECTION	COUNTY	TOTAL SHEETS	SHEET NO.
364	20-00091-03-BR	WOODFORD	114	13
		CONTRACT NO. 89854		

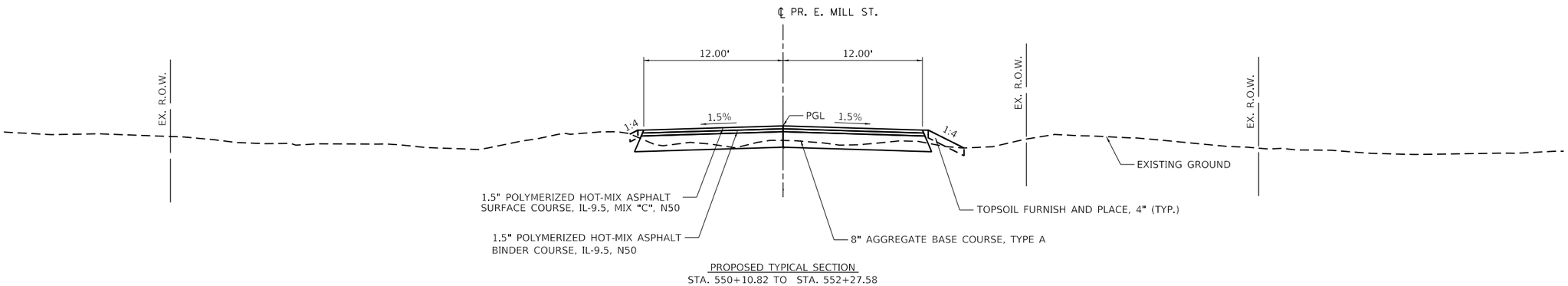

PROPOSED TYPICAL SECTION
STA. 550+10.82 TO STA. 552+27.58

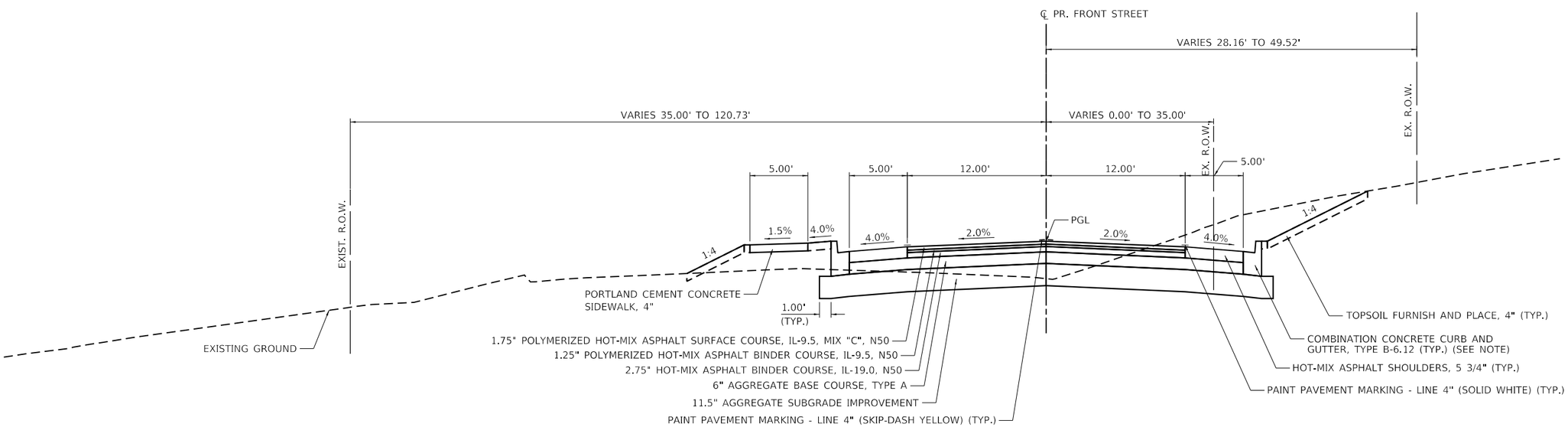

PROPOSED TYPICAL SECTION
STA. 17+71.90 TO STA. 21+70.00

NOTE:
COMBINATION CONCRETE CURB AND GUTTER, TYPE B-6.12 (MODIFIED) FROM STA. 20+97.87 RT TO STA. 21+70.00 RT

MODEL: Default
FILE NAME: S:\23720162371601\2.2 (Woodford Co CH 13 at Front St Ph III)\CADD\CADD Sheets\D416012-sht-typical sections.dgn

MAURER-STUTZ ENGINEERS SURVEYORS	USER NAME = jdspiller	DESIGNED - CLD	REVISED -	WOODFORD COUNTY HIGHWAY DEPARTMENT	COUNTY HIGHWAY 13 RECONSTRUCTION AT FRONT ST. TYPICAL SECTIONS
		DRAWN - CAD	REVISED -		
	PLOT SCALE = 10.0000 ' / in.	CHECKED - JDS	REVISED -		
	PLOT DATE = 11/12/2024	DATE - 10/18/2024	REVISED -		SCALE: SHEET 4 OF 4 SHEETS STA. TO STA.

F.A.S. RTE.	SECTION	COUNTY	TOTAL SHEETS	SHEET NO.
364	20-00091-03-BR	WOODFORD	114	14
		CONTRACT NO. 89854		

20100110 TREE REMOVAL (6 TO 15 UNITS DIAMETER)

LOCATION			UNIT	REMARKS
ISBG				
226+05.0	56.3'	RT	8.0	EX N CH 13
		ISBG SUBTOTAL	8.0	
		ISBG ROUNDED SUBTOTAL	8.0	
		TOTAL	8.0	

20100210 TREE REMOVAL (OVER 15 UNITS DIAMETER)

LOCATION			UNIT	REMARKS
ISBG				
17+88.0	57.7'	LT	100.0	EX E. FRONT ST.
18+85.3	71.4'	LT	40.0	EX E. FRONT ST.
		ISBG SUBTOTAL	140.0	
		ISBG ROUNDED SUBTOTAL	140.0	
		TOTAL	140.0	

21101615 TOPSOIL FURNISH AND PLACE, 4"

LOCATION				SQ YD	REMARKS
STR					
205+65.0	TO	206+43.2	LT	200.5	SB CH 13
205+65.0	TO	206+43.7	RT	205.6	NB CH 13
206+66.6	TO	214+40.6	LT	1691.8	SB CH 13
206+81.9	TO	209+80.6	RT	724.2	NB CH 13
210+01.8	TO	211+13.7	RT	206.1	NB CH 13
211+50.5	TO	214+16.9	RT	339.6	NB CH 13
214+29.7	TO	215+04.0	RT	54.3	NB CH 13
214+53.7	TO	217+35.2	LT	458.5	SB CH 13
215+13.7	TO	216+44.8	RT	43.4	NB CH 13
216+68.5	TO	217+38.1	RT	53.5	NB CH 13
217+48.7	TO	217+65.1	LT	19.8	SB CH 13
217+54.7	TO	217+69.2	RT	17.5	NB CH 13
217+77.1	TO	218+00.0	LT	36.9	SB CH 13
217+86.1	TO	218+00.0	RT	5.0	NB CH 13
222+25.0	TO	223+06.0	LT	157.5	SB CH 13
222+25.0	TO	224+90.0	RT	266.1	NB CH 13
223+29.3	TO	224+87.6	LT	67.5	SB CH 13
225+15.0	TO	227+38.0	RT	678.1	NB CH 13
225+32.7	TO	225+89.6	LT	56.2	SB CH 13
226+74.6	TO	227+67.6	LT	55.5	SB CH 13
227+61.8	TO	228+39.7	RT	62.4	NB CH 13
228+06.2	TO	229+10.8	LT	84.1	SB CH 13
228+66.7	TO	229+90.3	RT	379.0	NB CH 13
550+12.0	TO	552+27.6	RT	59.6	E. MILL ST. NB
550+13.7	TO	551+57.7	LT	33.4	E. MILL ST. SB
			STR SUBTOTAL	5956.3	
			STR ROUNDED SUBTOTAL	5956.0	

21101615 TOPSOIL FURNISH AND PLACE, 4" (CONT'D)

LOCATION				SQ YD	REMARKS
ISBG					
17+94.4	TO	20+66.1	RT	281.8	EB E. FRONT ST.
18+14.4	TO	21+70.0	LT	1077.6	WB E. FRONT ST.
20+98.5	TO	21+12.1	RT	24.6	EB E. FRONT ST.
218+00.0	TO	218+66.0	LT	119.2	SB CH 13
218+00.0	TO	218+86.3	RT	81.5	NB CH 13
218+82.6	TO	219+74.8	LT	305.7	SB CH 13
220+30.6	TO	222+25.0	LT	1047.5	SB CH 13
220+51.2	TO	222+25.0	RT	336.6	NB CH 13
400+00.0	TO	401+81.6	RT	480.4	W BRANCH PANTHER CREEK
400+00.0	TO	401+97.5	LT	435.8	W BRANCH PANTHER CREEK
402+77.6	TO	404+41.0	RT	403.0	W BRANCH PANTHER CREEK
402+83.4	TO	404+41.0	LT	457.9	W BRANCH PANTHER CREEK
			ISBG SUBTOTAL	5051.8	
			ISBG ROUNDED SUBTOTAL	5052.0	
			TOTAL	11008.0	

21301060 EXPLORATION TRENCH 60" DEPTH

LOCATION				FOOT	REMARKS
ISBG					
219+70.5	TO	220+92.6	LT/RT	230.2	WATER LINE UNDER CREEK
			ISBG ROUNDED SUBTOTAL	231.0	
			ROUNDED TOTAL	231.0	

25000210 SEEDING, CLASS 2A

LOCATION				ACRE	REMARKS
STR					
205+65.0	TO	206+43.2	LT	0.04	SB CH 13
205+65.0	TO	206+43.7	RT	0.04	NB CH 13
206+66.6	TO	214+40.6	LT	0.35	SB CH 13
206+81.9	TO	209+80.6	RT	0.15	NB CH 13
210+01.8	TO	211+13.7	RT	0.04	NB CH 13
211+50.5	TO	214+16.9	RT	0.07	NB CH 13
214+29.7	TO	215+04.0	RT	0.01	NB CH 13
214+52.4	TO	217+35.2	LT	0.09	SB CH 13
215+13.7	TO	216+44.82	RT	0.01	NB CH 13
216+68.46	TO	217+38.1	RT	0.01	NB CH 13
217+48.7	TO	217+65.1	LT	0.01	SB CH 13
217+54.7	TO	217+69.2	RT	0.01	NB CH 13
217+77.1	TO	218+00.0	LT	0.01	SB CH 13
217+86.1	TO	218+00.0	RT	0.01	NB CH 13
222+25.0	TO	223+06.0	LT	0.03	SB CH 13
222+25.0	TO	224+90.0	RT	0.05	NB CH 13
223+29.3	TO	224+87.6	LT	0.01	SB CH 13
225+15.0	TO	227+38.0	RT	0.14	NB CH 13
225+32.7	TO	225+89.6	LT	0.01	SB CH 13
226+74.6	TO	227+67.6	LT	0.01	SB CH 13
227+61.8	TO	228+39.7	RT	0.01	NB CH 13

25000210 SEEDING, CLASS 2A (CONT'D)

LOCATION				ACRE	REMARKS
228+06.2	TO	229+10.8	LT	0.02	SB CH 13
228+66.7	TO	229+90.3	RT	0.08	NB CH 13
550+12.0	TO	552+27.6	RT	0.01	E. MILL ST. NB
550+13.7	TO	551+57.7	LT	0.01	E. MILL ST. SB
			STR SUBTOTAL	1.25	
			STR ROUNDED SUBTOTAL	1.25	
ISBG					
17+94.4	TO	20+66.1	RT	0.06	EB E. FRONT ST.
18+14.4	TO	21+70.00	LT	0.22	WB E. FRONT ST.
20+98.5	TO	21+12.1	RT	0.01	EB E. FRONT ST.
218+00.0	TO	218+66.0	LT	0.02	SB CH 13
218+00.0	TO	218+86.3	RT	0.02	NB CH 13
218+82.6	TO	219+74.8	LT	0.06	SB CH 13
220+30.6	TO	222+25.0	LT	0.22	SB CH 13
220+57.9	TO	222+25.0	RT	0.07	NB CH 13
400+00.0	TO	401+81.6	RT	0.10	W BRANCH PANTHER CREEK
400+00.0	TO	401+97.5	LT	0.09	W BRANCH PANTHER CREEK
402+77.6	TO	404+41.0	RT	0.08	W BRANCH PANTHER CREEK
402+83.4	TO	404+41.0	LT	0.09	W BRANCH PANTHER CREEK
			ISBG SUBTOTAL	1.05	
			ISBG ROUNDED SUBTOTAL	1.25	
			ROUNDED TOTAL	2.50	

25000400 NITROGEN FERTILIZER NUTRIENT

LOCATION				POUND	REMARKS
STR					
205+65.0	TO	206+43.2	LT	3.7	SB CH 13
205+65.0	TO	206+43.7	RT	3.8	NB CH 13
206+66.6	TO	214+40.6	LT	31.5	SB CH 13
206+81.9	TO	209+80.6	RT	13.5	NB CH 13
210+01.8	TO	211+13.7	RT	3.8	NB CH 13
211+50.5	TO	214+16.9	RT	6.3	NB CH 13
214+29.7	TO	215+04.0	RT	1.0	NB CH 13
214+52.4	TO	217+35.2	LT	8.5	SB CH 13
215+13.7	TO	216+44.82	RT	0.9	NB CH 13
216+68.46	TO	217+38.1	RT	0.9	NB CH 13
217+48.7	TO	217+65.1	LT	0.9	SB CH 13
217+54.7	TO	217+69.2	RT	0.9	NB CH 13
217+77.1	TO	218+00.0	LT	0.9	SB CH 13
217+86.1	TO	218+00.0	RT	0.9	NB CH 13
222+25.0	TO	223+06.0	LT	2.9	SB CH 13
222+25.0	TO	224+90.0	RT	4.9	NB CH 13
223+29.3	TO	224+87.6	LT	1.3	SB CH 13
225+15.0	TO	227+38.0	RT	12.6	NB CH 13
225+32.7	TO	225+89.6	LT	1.0	SB CH 13
226+74.6	TO	227+67.6	LT	1.0	SB CH 13
227+61.8	TO	228+39.7	RT	1.2	NB CH 13
228+06.2	TO	229+10.8	LT	1.6	SB CH 13
228+66.7	TO	229+90.3	RT	7.0	NB CH 13
550+12.0	TO	552+27.6	RT	1.1	E. MILL ST. NB
550+13.7	TO	551+57.7	LT	0.6	E. MILL ST. SB

25000400 NITROGEN FERTILIZER NUTRIENT (CONT'D)

LOCATION				POUND	REMARKS
			STR SUBTOTAL	112.9	
			STR ROUNDED SUBTOTAL	113.0	
ISBG					
17+94.4	TO	20+66.1	RT	5.2	EB E. FRONT ST.
18+14.4	TO	21+70.00	LT	20.0	WB E. FRONT ST.
20+98.5	TO	21+12.1	RT	0.9	EB E. FRONT ST.
218+00.0	TO	218+66.0	LT	2.2	SB CH 13
218+00.0	TO	218+86.3	RT	1.5	NB CH 13
218+82.6	TO	219+74.8	LT	5.7	SB CH 13
220+30.6	TO	222+25.0	LT	19.5	SB CH 13
220+57.9	TO	222+25.0	RT	6.3	NB CH 13
400+00.0	TO	401+81.6	RT	8.9	W BRANCH PANTHER CREEK
400+00.0	TO	401+97.5	LT	8.1	W BRANCH PANTHER CREEK
402+77.6	TO	404+41.0	RT	7.5	W BRANCH PANTHER CREEK
402+83.4	TO	404+41.0	LT	8.5	W BRANCH PANTHER CREEK
			ISBG SUBTOTAL	94.4	
			ISBG ROUNDED SUBTOTAL	94.0	
			ROUNDED TOTAL	207.0	

25000500 PHOSPHORUS FERTILIZER NUTRIENT

LOCATION				POUND	REMARKS
STR					
205+65.0	TO	206+43.2	LT	3.7	SB CH 13
205+65.0	TO	206+43.7	RT	3.8	NB CH 13
206+66.6	TO	214+40.6	LT	31.5	SB CH 13
206+81.9	TO	209+80.6	RT	13.5	NB CH 13
210+01.8	TO	211+13.7	RT	3.8	NB CH 13
211+50.5	TO	214+16.9	RT	6.3	NB CH 13
214+29.7	TO	215+04.0	RT	1.0	NB CH 13
214+52.4	TO	217+35.2	LT	8.5	SB CH 13
215+13.7	TO	216+44.82	RT	0.8	NB CH 13
216+68.46	TO	217+38.1	RT	1.0	NB CH 13
217+48.7	TO	217+65.1	LT	0.9	SB CH 13
217+54.7	TO	217+69.2	RT	0.9	NB CH 13
217+77.1	TO	218+00.0	LT	0.9	SB CH 13
217+86.1	TO	218+00.0	RT	0.9	NB CH 13
222+25.0	TO	223+05.5	LT	2.9	SB CH 13
222+25.0	TO	224+90.0	RT	4.9	NB CH 13
223+29.3	TO	224+87.6	LT	1.3	SB CH 13
225+15.0	TO	227+38.0	RT	12.6	NB CH 13
225+32.7	TO	225+89.6	LT	1.0	SB CH 13
226+74.6	TO	227+67.6	LT	1.0	SB CH 13
227+61.8	TO	228+39.7	RT	1.2	NB CH 13
228+06.2	TO	229+10.8	LT	1.6	SB CH 13
228+66.7	TO	229+90.3	RT	7.0	NB CH 13
550+12.0	TO	552+27.6	RT	1.1	E. MILL ST. NB
550+13.7	TO	551+57.7	LT	0.6	E. MILL ST. SB
			STR SUBTOTAL	112.9	
			STR ROUNDED SUBTOTAL	113.0	

25000500 PHOSPHORUS FERTILIZER NUTRIENT (CONT'D)

LOCATION				POUND	REMARKS
ISBG					
17+94.4	TO	20+66.1	RT	5.2	EB E. FRONT ST.
18+14.4	TO	21+70.00	LT	20.0	WB E. FRONT ST.
20+98.5	TO	21+12.1	RT	0.9	EB E. FRONT ST.
218+00.0	TO	218+66.0	LT	2.2	SB CH 13
218+00.0	TO	218+86.3	RT	1.5	NB CH 13
218+82.6	TO	219+74.8	LT	5.7	SB CH 13
220+30.6	TO	222+25.0	LT	19.5	SB CH 13
220+57.9	TO	222+25.0	RT	6.3	NB CH 13
400+00.0	TO	401+81.6	RT	8.9	W BRANCH PANTHER CREEK
400+00.0	TO	401+97.5	LT	8.1	W BRANCH PANTHER CREEK
402+77.6	TO	404+41.0	RT	7.5	W BRANCH PANTHER CREEK
402+83.4	TO	404+41.0	LT	8.5	W BRANCH PANTHER CREEK
			ISBG SUBTOTAL	94.4	
			ISBG ROUNDED SUBTOTAL	94.0	
			ROUNDED TOTAL	207.0	

25000600 POTASSIUM FERTILIZER NUTRIENT

LOCATION				POUND	REMARKS
STR					
205+65.0	TO	206+43.2	LT	3.7	SB CH 13
205+65.0	TO	206+43.7	RT	3.8	NB CH 13
206+66.6	TO	214+40.6	LT	31.5	SB CH 13
206+81.9	TO	209+80.6	RT	13.5	NB CH 13
210+01.8	TO	211+13.7	RT	3.8	NB CH 13
211+50.5	TO	214+16.9	RT	6.3	NB CH 13
214+29.7	TO	215+04.0	RT	1.0	NB CH 13
214+52.4	TO	217+35.2	LT	8.5	SB CH 13
215+13.7	TO	216+44.82	RT	0.8	NB CH 13
216+68.46	TO	217+38.1	RT	1.0	NB CH 13
217+48.7	TO	217+65.1	LT	0.9	SB CH 13
217+54.7	TO	217+69.2	RT	0.9	NB CH 13
217+77.1	TO	218+00.0	LT	0.9	SB CH 13
217+86.1	TO	218+00.0	RT	0.9	NB CH 13
222+25.0	TO	223+05.5	LT	2.9	SB CH 13
222+25.0	TO	224+90.0	RT	4.9	NB CH 13
223+29.3	TO	224+87.6	LT	1.3	SB CH 13
225+15.0	TO	227+38.0	RT	12.6	NB CH 13
225+32.7	TO	225+89.6	LT	1.0	SB CH 13
226+74.6	TO	227+67.6	LT	1.0	SB CH 13
227+61.8	TO	228+39.7	RT	1.2	NB CH 13
228+06.2	TO	229+10.8	LT	1.6	SB CH 13
228+66.7	TO	229+90.3	RT	7.0	NB CH 13
550+12.0	TO	552+27.6	RT	1.1	E. MILL ST. NB
550+13.7	TO	551+57.7	LT	0.6	E. MILL ST. SB
			STR SUBTOTAL	112.9	
			STR ROUNDED SUBTOTAL	113.0	

25000600 POTASSIUM FERTILIZER NUTRIENT (CONT'D)

LOCATION				POUND	REMARKS
ISBG					
17+94.4	TO	20+66.1	RT	5.2	EB E. FRONT ST.
18+14.4	TO	21+70.00	LT	20.0	WB E. FRONT ST.
20+98.5	TO	21+12.1	RT	0.9	EB E. FRONT ST.
218+00.0	TO	218+66.0	LT	2.2	SB CH 13
218+00.0	TO	218+86.3	RT	1.5	NB CH 13
218+82.6	TO	219+74.8	LT	5.7	SB CH 13
220+30.6	TO	222+25.0	LT	19.5	SB CH 13
220+57.9	TO	222+25.0	RT	6.3	NB CH 13
400+00.0	TO	401+81.6	RT	8.9	W BRANCH PANTHER CREEK
400+00.0	TO	401+97.5	LT	8.1	W BRANCH PANTHER CREEK
402+77.6	TO	404+41.0	RT	7.5	W BRANCH PANTHER CREEK
402+83.4	TO	404+41.0	LT	8.5	W BRANCH PANTHER CREEK
			ISBG SUBTOTAL	94.4	
			ISBBG ROUNDED SUBTOTAL	94.0	
			ROUNDED TOTAL	207.0	

25100115 MULCH, METHOD 2

LOCATION				ACRE	REMARKS
STR					
205+65.0	TO	206+43.2	LT	0.04	SB CH 13
205+65.0	TO	206+43.7	RT	0.04	NB CH 13
206+66.6	TO	214+40.6	LT	0.35	SB CH 13
206+81.9	TO	209+80.6	RT	0.15	NB CH 13
210+01.8	TO	211+13.7	RT	0.04	NB CH 13
211+50.5	TO	214+16.9	RT	0.07	NB CH 13
214+29.7	TO	215+04.0	RT	0.01	NB CH 13
214+52.4	TO	217+35.2	LT	0.09	SB CH 13
215+13.7	TO	216+44.82	RT	0.01	NB CH 13
216+68.46	TO	217+38.1	RT	0.01	NB CH 13
217+48.7	TO	217+65.1	LT	0.01	SB CH 13
217+54.7	TO	217+69.2	RT	0.01	NB CH 13
217+77.1	TO	218+00.0	LT	0.01	SB CH 13
217+86.1	TO	218+00.0	RT	0.01	NB CH 13
222+25.0	TO	223+06.0	LT	0.03	SB CH 13
222+25.0	TO	224+90.0	RT	0.05	NB CH 13
223+29.3	TO	224+87.6	LT	0.01	SB CH 13
225+15.0	TO	227+38.0	RT	0.14	NB CH 13
225+32.7	TO	225+89.6	LT	0.01	SB CH 13
226+74.6	TO	227+67.6	LT	0.01	SB CH 13
227+61.8	TO	228+39.7	RT	0.01	NB CH 13
228+06.2	TO	229+10.8	LT	0.02	SB CH 13
228+66.7	TO	229+90.3	RT	0.08	NB CH 13
550+12.0	TO	552+27.6	RT	0.01	E. MILL ST. NB
550+13.7	TO	551+57.7	LT	0.01	E. MILL ST. SB
			STR SUBTOTAL	1.25	
			STR ROUNDED SUBTOTAL	1.25	

25100115 MULCH, METHOD 2 (CONT'D)

LOCATION				ACRE	REMARKS
ISBG					
17+94.4	TO	20+66.1	RT	0.06	EB E. FRONT ST.
18+14.4	TO	21+70.00	LT	0.22	WB E. FRONT ST.
20+98.5	TO	21+12.1	RT	0.01	EB E. FRONT ST.
218+00.0	TO	218+66.0	LT	0.02	SB CH 13
218+00.0	TO	218+86.3	RT	0.02	NB CH 13
218+82.6	TO	219+74.8	LT	0.06	SB CH 13
220+30.6	TO	222+25.0	LT	0.22	SB CH 13
220+57.9	TO	222+25.0	RT	0.07	NB CH 13
			ISBG SUBTOTAL	0.68	
			ISBG ROUNDED SUBTOTAL	0.75	
			ROUNDED TOTAL	2.00	

25100630 EROSION CONTROL BLANKET

LOCATION				SQ YD	REMARKS
ISBG					
400+00.0	TO	401+81.6	RT	480.4	W BRANCH PANTHER CREEK
400+00.0	TO	401+97.5	LT	435.8	W BRANCH PANTHER CREEK
402+77.6	TO	404+41.0	RT	403.0	W BRANCH PANTHER CREEK
402+83.4	TO	404+41.0	LT	457.9	W BRANCH PANTHER CREEK
			ISBG SUBTOTAL	1777.1	
			ISBG ROUNDED SUBTOTAL	1777.0	
			ROUNDED TOTAL	1777.0	

28000250 TEMPORARY EROSION CONTROL SEEDING

LOCATION	POUND	REMARKS
STR		
PROJECT	376.3	
STR SUBTOTAL	376.3	
STR ROUNDED SUBTOTAL	376.0	
ISBG		
PROJECT	314.6	
ISBG SUBTOTAL	314.6	
ISBG ROUNDED SUBTOTAL	315.0	
ROUNDED TOTAL	691.0	

28000305 TEMPORARY DITCH CHECKS

LOCATION			FOOT	REMARKS
STR				
206+46.0	26.6'	LT	10.0	SB CH 13
206+46.0	28.7'	RT	10.0	NB CH 13
206+90.0	26.9'	LT	10.0	SB CH13
206+92.0	29.0'	RT	10.0	NB CH 13
207+35.0	28.7'	LT	10.0	SB CH13
207+38.0	30.0'	RT	10.0	NB CH 13
207+80.0	30.5'	LT	10.0	SB CH13
207+84.0	31.2'	RT	10.0	NB CH 13
208+25.0	32.2'	LT	10.0	SB CH13
208+30.0	31.3'	RT	10.0	NB CH 13
208+70.0	32.2'	LT	10.0	SB CH13
208+76.0	31.0'	RT	10.0	NB CH 13

28000305 TEMPORARY DITCH CHECKS (CONT'D)

LOCATION			FOOT	REMARKS
209+15.0	32.4'	LT	10.0	SB CH13
209+22.0	31.6'	RT	10.0	NB CH 13
209+60.0	33.0'	LT	10.0	SB CH13
209+68.0	33.0'	RT	10.0	NB CH 13
210+05.0	33.8'	LT	10.0	SB CH13
210+50.0	35.1'	LT	10.0	SB CH13
210+49.7	32.1'	RT	10.0	NB CH 13
210+95.0	36.5'	LT	10.0	SB CH13
211+40.0	38.3'	LT	10.0	SB CH13
		STR SUBTOTAL	210.0	
		STR ROUNDED SUBTOTAL	210.0	
		ROUNDED TOTAL	210.0	

28000400 PERIMETER EROSION BARRIER

LOCATION				FOOT	REMARKS
STR					
211+49.9	TO	214+37.3	LT	311.8	SB CH 13
213+61.3	TO	214+16.7	RT	68.9	NB CH 13
214+35.1	TO	215+03.8	RT	86.3	NB CH 13
214+52.4	TO	217+35.2	LT	276.7	SB CH 13
215+13.8	TO	216+44.51	RT	150.2	NB CH 13
216+70.1	TO	217+37.9	RT	87.6	NB CH 13
217+48.7	TO	217+65.1	LT	16.4	SB CH 13
217+54.8	TO	217+69.3	RT	16.2	NB CH 13
217+77.1	TO	218+00.0	LT	23.0	SB CH 13
217+86.3	TO	218+00.0	RT	16.3	NB CH 13
222+25.0	TO	223+05.7	LT	86.3	SB CH 13
222+25.0	TO	224+86.9	RT	335.1	NB CH 13
223+29.3	TO	224+62.6	LT	146.7	SB CH 13
224+92.8	TO	225+89.7	LT	114.9	SB CH 13
225+21.8	TO	226+58.8	RT	213.7	NB CH 13
226+39.5	TO	227+37.6	RT	144.7	NB CH 13
226+74.8	TO	227+69.0	LT	102.4	SB CH 13
227+62.1	TO	228+39.6	RT	89.1	NB CH 13
228+04.0	TO	229+01.5	LT	142.3	SB CH 13
228+74.6	TO	229+90.3	RT	217.6	NB CH 13
550+10.0	TO	552+27.5	RT	219.1	E. MILL ST. NB
550+13.7	TO	551+57.0	LT	165.6	E. MILL ST. SB
			STR SUBTOTAL	3030.7	
			STR ROUNDED SUBTOTAL	3031.0	
ISBG					
15+49.8	TO	16+36.6	RT	86.8	EB W. FRONT ST.
18+93.7	TO	20+13.5	LT	136.7	WB E. FRONT ST.
218+00.0	TO	218+66.0	LT	62.1	SB CH 13
218+00.0	TO	218+83.4	RT	91.5	NB CH 13
218+85.0	TO	219+64.2	LT	75.1	SB CH 13
220+75.9	TO	222+25.0	LT	228.1	SB CH 13
220+68.3	TO	222+25.0	RT	154.1	NB CH 13
			ISBG SUBTOTAL	834.4	
			ISBG ROUNDED SUBTOTAL	834.0	
			ROUNDED TOTAL	3865.0	

28000500 INLET AND PIPE PROTECTION

LOCATION			EACH	REMARKS
STR				
216+91.61	19.4'	RT	1.0	CH 13
228+73.41	22.4'	RT	1.0	CH 13
550+53.0	10.5'	LT	1.0	E MILL
550+53.0	10.5'	RT	1.0	E MILL
		STR SUBTOTAL	4.0	
		STR ROUNDED SUBTOTAL	4.0	
ISBG				
220+85.13	50.3'	LT	1.0	CH 13
		ISBG SUBTOTAL	1.0	
		ISBG ROUNDED SUBTOTAL	1.0	
		ROUNDED TOTAL	5.0	

28000510 INLET FILTERS

LOCATION			EACH	REMARKS
STR				
214+38.41	24.3'	RT	1.0	CH 13
216+91.61	19.4'	RT	1.0	CH 13
222+57.88	18.6'	LT	1.0	CH 13
222+57.88	18.6'	RT	1.0	CH 13
224+57.62	18.6'	LT	1.0	CH 13
224+60.00	18.6'	RT	1.0	CH 13
224+82.6	20.1'	LT	1.0	CH 13
224+85.31	29.1'	RT	1.0	CH 13
225+55.02	18.6'	LT	1.0	CH 13
225+55.02	18.6'	RT	1.0	CH 13
227+96.06	18.4'	RT	1.0	CH 13
228+34.34	20.5'	LT	1.0	CH 13
229+31.03	39.9'	LT	1.0	CH 13
550+53.0	10.5'	LT	1.0	E. MILL ST.
550+53.0	10.5'	RT	1.0	E. MILL ST.
128+65.58	20.5'	RT	1.0	IL 116
		STR SUBTOTAL	16.0	
		STR ROUNDED SUBTOTAL	16.0	
ISBG				
218+86.58	30.6'	RT	1.0	CH 13
18+21.81	33.5'	LT	1.0	E. FRONT ST.
19+40.11	18.7'	RT	1.0	E. FRONT ST.
19+40.12	18.5'	LT	1.0	E. FRONT ST.
20+61.92	34.3'	RT	1.0	E. FRONT ST.
21+03.96	35.1'	RT	1.0	E. FRONT ST.
		ISBG SUBTOTAL	6.0	
		ISBG ROUNDED SUBTOTAL	6.0	
		ROUNDED TOTAL	22.0	

28100105 STONE RIPRAP, CLASS A3

LOCATION				SQ YD	REMARKS
STR					
206+23.0	TO	206+27.9	LT	2.8	CH 13
206+23.4	TO	206+28.4	RT	2.8	CH 13
206+77.6	TO	206+82.6	LT	2.8	CH 13
206+95.1	TO	207+00.1	RT	2.8	CH 13
209+61.7	TO	209+66.7	RT	2.8	CH 13
211+77.6	TO	211+86.7	LT	11.1	CH 13
213+87.5	TO	213+98.6	LT	5.6	CH 13
			STR SUBTOTAL	30.6	
			STR ROUNDED SUBTOTAL	31.0	
			ROUNDED TOTAL	31.0	

28100107 STONE RIPRAP, CLASS A4

LOCATION				SQ YD	REMARKS
ISBG					
219+42.2	TO	219+63.1		9.7	CH 13 GUTTER OUTLET
219+63.1	TO	220+63.0		728.0	CH 13 STRUCTURE
			ISBG SUBTOTAL	737.7	
			ISBG ROUNDED SUBTOTAL	738.0	
			ROUNDED TOTAL	738.0	

28200200 FILTER FABRIC

LOCATION				SQ YD	REMARKS
STR					
206+23.0	TO	206+27.9	LT	2.8	CO HWY 13
206+23.4	TO	206+28.4	RT	2.8	CO HWY 13
206+77.6	TO	206+82.6	LT	2.8	CO HWY 13
206+95.1	TO	207+00.1	RT	2.8	CO HWY 13
209+60.1	TO	209+65.1	RT	2.8	CO HWY 13
210+20.8	TO	210+25.8	RT	2.8	CO HWY 13
210+65.7	TO	210+70.7	RT	2.8	CO HWY 13
211+77.6	TO	211+86.7	LT	11.1	CO HWY 13
214+23.5	TO	214+28.6	LT	2.8	CO HWY 13
214+67.1	TO	214+72.2	LT	2.8	CO HWY 13
			STR SUBTOTAL	36.1	
			STR ROUNDED SUBTOTAL	36.0	
ISBG					
219+63.1	TO	220+63.0		728.0	CO HWY 13 STRUCTURE
			ISBG SUBTOTAL	728.0	
			ISBG ROUNDED SUBTOTAL	728.0	
			ROUNDED TOTAL	764.0	

28500400 ARTICULATED BLOCK REVETMENT MAT

LOCATION				SQ YD	REMARKS
ISBG					
401+42.0	TO	401+93.4		215.5	
			ISBG SUBTOTAL	215.5	
			ISBG ROUNDED SUBTOTAL	215.0	
			ROUNDED TOTAL	215.0	

30300001 AGGREGATE SUBGRADE IMPROVEMENT

LOCATION				CU YD	REMARKS
STR					
210+00.0	TO	218+00.0	RT	455.8	NB CH 13
210+00.0	TO	218+00.0	LT	455.7	SB CH 13
216+17.72	TO	216+94.68	RT	37.9	E. WOODFORD ST.
222+25.0	TO	229+49.5	RT	518.4	NB CH 13
222+25.0	TO	229+49.5	LT	544.4	SB CH 13
229+49.5	TO	229+74.5	LT	70.8	SB CH 13 IN IDOT ROW
229+49.5	TO	229+74.5	RT	50.5	NB CH 13 IN IDOT ROW
224+57.6	TO	225+55.1	LT	49.7	W. MILL ST.
224+60.1	TO	225+43.3	RT	41.1	E. RANDOLPH ST.
			STR SUBTOTAL	2224.3	
			STR ROUNDED SUBTOTAL	2224.0	
ISBG					
218+00.0	TO	219+54.3	RT	76.4	NB CH 13
218+00.0	TO	219+51.0	LT	101.1	SB CH 13
220+71.0	TO	222+25.0	RT	107.1	NB CH 13
220+65.7	TO	222+25.0	LT	109.8	SB CH 13
17+71.9	TO	21+70.00	RT	286.1	EB E. FRONT ST.
17+88.3	TO	21+69.90	LT	294.5	WB E. FRONT ST.
20+33.3	TO	21+69.99	RT	104.1	S. STATE ST.
			ISBG SUBTOTAL	1079.0	
			ISBG ROUNDED SUBTOTAL	1079.0	
			ROUNDED TOTAL	3303.0	

35100100 AGGREGATE BASE COURSE, TYPE A

LOCATION				TON	REMARKS
STR					
210+00.0	TO	214+29.7	RT	210.8	NB CH 13
210+00.0	TO	214+29.7	LT	212.8	SB CH 13
214+29.7	TO	218+00.0	RT	225.0	NB CH 13
214+29.7	TO	218+00.0	LT	238.9	SB CH 13
216+17.7	TO	216+97.3	RT	53.9	E. WOODFORD ST.
222+25.0	TO	229+72.8	RT	465.1	NB CH 13
222+25.0	TO	229+49.5	LT	494.9	SB CH 13
224+57.6	TO	225+55.1	LT	72.3	W. MILL ST.
224+60.1	TO	225+43.3	RT	58.7	E. RANDOLPH ST.
550+09.99	TO	552+27.58	RT	143.3	E. MILL ST. NB
550+11.68	TO	552+27.58	LT	151.6	E. MILL ST. SB
			STR SUBTOTAL	2327.2	
			STR ROUNDED SUBTOTAL	2327.0	
ISBG					
218+00.0	TO	219+37.4	RT	88.0	NB CO HWY 13
218+00.0	TO	219+35.7	LT	86.1	SB CO HWY 13
220+86.7	TO	222+25.0	RT	90.1	NB CO HWY 13
220+86.7	TO	222+25.0	LT	90.0	SB CO HWY 13
17+88.7	TO	21+70.00	RT	261.6	EB E FRONT ST.
17+88.7	TO	21+70.00	LT	250.6	WB E FRONT ST.
20+33.3	TO	21+70.00	RT	95.5	S. STATE ST.
			ISBG SUBTOTAL	961.9	
			ISBG ROUNDED SUBTOTAL	962.0	
			ROUNDED TOTAL	3289.0	

35600650 HOT-MIX ASPHALT BASE COURSE WIDENING, 4"

LOCATION				SQ YD	REMARKS
STR					
205+65.00	TO	210+00.00	RT	169.1	NB CH 13
205+65.00	TO	210+00.00	LT	172.9	SB CH 13
			STR SUBTOTAL	342.0	
			STR ROUNDED SUBTOTAL	342.0	
			ROUNDED TOTAL	342.0	

40200700 AGGREGATE SURFACE COURSE, TYPE A 8"

LOCATION				SQ YD	REMARKS
STR					
217+60.62	TO	217+80.81	LT	15.0	CO HWY 13
450+77.99	TO	451+01.99	RT	35.6	E. RANDOPLH ST.
			STR TOT	50.6	
			STR ROUNDED TOTAL	51.0	
ISBG					
218+64.54	TO	218+85.80	LT	28.3	CO HWY 13
			ISBG TOTA	28.3	
			ISBG ROUNDED TOTAL	28.0	
			ROUNDED TOTAL	79.0	

40600275 BITUMINOUS MATERIALS (PRIME COAT)

LOCATION				POUND	REMARKS
STR					
210+00.0	TO	218+00.0	RT	2968.9	NB CH 13
210+00.0	TO	218+00.0	LT	2934.2	SB CH 13
216+17.7	TO	216+97.3	RT	255.2	E. WOODFORD ST.
222+25.0	TO	229+49.5	LT	3381.1	SB CH 13
222+25.0	TO	229+72.8	RT	3167.1	NB CH 13
224+57.6	TO	225+55.1	LT	354.2	W. MILL ST.
224+60.1	TO	225+43.3	RT	282.5	E. RANDOLPH ST.
550+10.0	TO	552+27.6	RT	707.7	E. MILL ST. NB
550+11.7	TO	552+27.6	LT	748.7	E. MILL ST. SB
			STR TOT	14799.8	
			STR ROUNDED TOAL	14800.0	
ISBG					
218+00.0	TO	219+37.4	RT	589.0	NB CH 13
218+00.0	TO	219+35.7	LT	567.0	SB CH 13
220+86.7	TO	222+25.0	RT	593.0	NB CH 13
220+86.7	TO	222+25.0	LT	592.4	SB CH 13
17+71.90	TO	21+70.00	RT	1715.0	EB E. FRONT ST.
17+91.06	TO	21+70.00	LT	1649.1	WB E. FRONT ST.
20+33.3	TO	21+70.00	RT	629.2	S. STATE ST.
			ISBG TOTA	6334.8	
			ISBG ROUNDED TOTAL	6335.0	
			ROUNDED TOTAL	21135.0	

40600295 POLYMERIZED BITUMINOUS MATERIALS (TACK COAT)

LOCATION				POUND	REMARKS
STR					
205+65.0	TO	210+00.0	RT	896.3	NB CH 13
205+65.0	TO	210+00.0	LT	899.4	SB CH 13
210+00.0	TO	218+00.0	RT	1601.5	NB CH 13
210+00.0	TO	218+00.0	LT	1608.9	SB CH 13
214+30.9	TO	216+17.7	RT	75.9	NB CH 13 SHOULDER
214+58.7	TO	218+00.0	LT	135.5	SB CH 13 SHOULDER
216+17.71	TO	216+97.34	RT	227.1	E. WOODFORD ST.
216+46.40	TO	216+66.87	RT	32.6	E. WOODFORD ST. BUTT JT.
216+97.3	TO	218+00.0	RT	41.1	NB CH 13 SHOULDER
222+25.0	TO	229+49.5	LT	1601.3	SB CH 13
222+25.0	TO	229+66.9	RT	1431.2	NB CH 13
222+25.0	TO	224+57.6	LT	93.8	SB CH 13 SHOULDER
222+25.0	TO	224+60.1	RT	93.2	NB CH 13 SHOULDER
224+57.6	TO	225+55.1	LT	304.6	W. MILL ST.
224+60.1	TO	225+43.3	RT	247.4	E. RANDOLPH ST.
224+87.60	TO	225+17.84	LT	113.0	W. MILL ST. BUTT JT.
224+90.03	TO	225+13.09	RT	36.7	E. RANDOLPH ST. BUTT JT.
225+43.3	TO	229+72.8	RT	171.4	NB CH 13 SHOULDER
225+55.1	TO	229+15.1	LT	148.5	SB CH 13 SHOULDER
550+10.0	TO	552+27.6	RT	224.2	E. MILL ST. NB
550+11.7	TO	552+27.6	LT	237.1	E. MILL ST. SB
				STR TOT 10220.7	
				STR ROUNDED TOTAL 10221.0	
ISBG					
218+00.0	TO	219+47.6	LT	57.1	SB CH 13 SHOULDER
218+00.0	TO	219+35.7	LT	257.4	SB CH 13
218+00.0	TO	219+36.8	RT	264.2	NB CH 13
218+00.0	TO	218+38.4	RT	15.8	NB CH 13 SHOULDER
220+86.7	TO	222+25.0	LT	56.1	SB CH 13 SHOULDER
220+86.7	TO	222+25.0	LT	267.0	SB CH 13
220+86.7	TO	222+25.0	RT	264.1	NB CH 13
220+86.7	TO	22+25.0	RT	57.7	NB CH 13 SHOULDER
17+61.6	TO	20+33.3	RT	119.1	EB E. FRONT ST. SHOULDER
17+61.6	TO	21+70.00	RT	931.0	EB E. FRONT ST.
17+84.1	TO	21+70.00	LT	781.7	WB E. FRONT ST.
18+23.2	TO	21+70.00	LT	141.7	WB E. FRONT ST. SHOULDER
20+33.3	TO	21+70.00	RT	402.7	S. STATE ST.
20+67.92	TO	20+96.87	RT	45.1	S. STATE ST. BUTT JT.
				ISBG SUBTOTAL 3660.6	
				ISBG ROUNDED TOTAL 3661.0	
				ROUNDED TOTAL 13882.0	

40600405 MATERIAL TRANSFER DEVICE

LOCATION				TON	REMARKS
STR					
HMA BASE COURSE WIDENING					
205+65.00	TO	210+00.00	RT	37.9	NB CH 13
205+65.00	TO	210+00.00	LT	38.7	SB CH 13

40600405 MATERIAL TRANSFER DEVICE (CONT'D)

LOCATION				TON	REMARKS
BINDER IL-19.0					
210+00.00	TO	218+00.00	RT	171.3	NB CH 13
210+00.00	TO	218+00.00	LT	172.1	SB CH 13
216+17.71	TO	216+97.34	RT	23.5	E. WOODFORD ST.
222+25.00	TO	229+49.48	LT	171.3	SB CH 13
222+25.00	TO	229+49.48	RT	153.1	NB CH 13
224+57.59	TO	225+55.09	LT	32.6	W. MILL ST.
224+60.07	TO	225+43.28	RT	26.5	E. RANDOLPH ST.
229+49.48	TO	229+74.48	LT	44.4	SB CH 13 IN IDOT ROW
229+49.48	TO	229+74.48	RT	26.2	NB CH 13 IN IDOT ROW
POLYMER BINDER IL-9.5					
206+00.0	TO	210+00.00	RT	40.4	NB CH 13
206+00.0	TO	210+00.00	LT	40.4	SB CH 13
210+00.00	TO	218+00.0	RT	77.9	NB CH 13
210+00.00	TO	218+00.0	LT	78.2	SB CH 13
216+17.7	TO	216+97.3	RT	10.7	E. WOODFORD ST.
222+25.0	TO	229+49.5	LT	77.8	SB CH 13
222+25.0	TO	229+49.5	RT	69.6	NB CH 13
229+49.5	TO	229+74.5	LT	12.3	SB CH 13 IN IDOT ROW
229+49.5	TO	229+74.5	RT	7.3	NB CH 13 IN IDOT ROW
224+57.6	TO	225+55.1	LT	14.8	W. MILL ST.
224+60.1	TO	225+43.3	RT	12.0	E. RANDOLPH ST.
550+10.0	TO	552+27.6	RT	25.9	E. MILL ST.
550+10.8	TO	552+27.6	LT	27.4	E. MILL ST.
POLYMER HMA SURFACE					
205+65.0	TO	210+00.0	RT	52.3	NB CH 13
205+65.0	TO	210+00.0	LT	52.5	SB CH 13
210+00.0	TO	218+00.0	RT	109.0	NB CH 13
210+00.0	TO	218+00.0	LT	109.5	SB CH 13
216+17.7	TO	216+97.3	RT	15.0	E. WOODFORD ST.
216+46.3	TO	216+67.1	RT	2.2	E. WOODFORD ST. BUTT JT.
220+67.8	TO	229+49.5	LT	129.4	SB CH 13
220+74.2	TO	229+49.5	RT	117.2	NB CH 13
229+49.5	TO	229+74.5	LT	17.2	SB CH 13 IN IDOT ROW
229+49.5	TO	229+74.5	RT	10.2	NB CH 13 IN IDOT ROW
224+57.6	TO	225+55.1	LT	20.7	W. MILL ST.
224+60.1	TO	225+43.3	RT	16.8	E. RANDOLPH ST.
224+76.4	TO	225+17.8	LT	7.7	W. MILL ST. BUTT JOINT
224+90.0	TO	225+13.1	RT	2.5	E. RANDOLPH ST. BUTT JT.
550+10.0	TO	552+27.6	RT	25.9	E. MILL ST. NB
550+11.7	TO	552+27.6	LT	27.4	E. MILL ST. SB
				STR SUBTOTAL 2107.6	
				STR ROUNDED SUBTOTAL 2108.0	
ISBG					
BINDER IL-19.0					
218+00.00	TO	219+51.03	LT	30.3	SB CH 13
218+00.00	TO	219+54.29	RT	31.7	NB CH 13
220+67.75	TO	222+25.00	LT	32.1	SB CH 13
220+70.96	TO	222+25.00	RT	31.1	NB CH 13
17+61.62	TO	21+25.09	RT	90.3	EB E. FRONT ST.
17+84.08	TO	21+25.09	LT	85.1	WB E. FRONT ST.
20+35.18	TO	21+25.09	RT	34.8	S. STATE ST.

40600405 MATERIAL TRANSFER DEVICE (CONT'D)

LOCATION				TON	REMARKS
POLYMER BINDER IL-9.5					
218+00.0	TO	219+51.0	LT	13.8	SB CH 13
218+00.0	TO	219+54.3	RT	14.4	NB CH 13
220+67.8	TO	222+25.0	LT	14.6	SB CH 13
220+71.0	TO	222+25.0	RT	14.2	NB CH 13
17+61.6	TO	21+25.1	RT	41.1	EB E. FRONT ST.
17+84.1	TO	21+25.1	LT	38.7	WB E. FRONT ST.
20+35.2	TO	21+25.1	RT	15.8	S. STATE ST.
POLYMER HMA SURFACE					
218+00.0	TO	219+51.0	LT	19.3	SB CH 13
218+00.0	TO	219+54.3	RT	20.2	NB CH 13
220+67.8	TO	222+25.0	LT	20.4	SB CH 13
220+71.0	TO	222+25.0	RT	19.8	NB CH 13
17+61.6	TO	21+25.1	RT	57.5	EB E. FRONT ST.
17+84.1	TO	21+25.1	LT	54.1	WB E. FRONT ST.
20+34.6	TO	21+25.1	RT	22.1	S. STATE ST.
20+67.1	TO	20+97.2	RT	3.0	S. STATE ST. BUTT JT.
21+32.2	TO	21+42.2	RT	4.4	E. FRONT ST. BUTT JT.
			ISBG SUBTOTAL	708.8	
			ISBG ROUNDED SUBTOTAL	709.0	
			ROUNDED TOTAL	2817.0	

40600982 HOT-MIX ASPHALT SURFACE REMOVAL - BUTT JOINT

LOCATION				SQ YD	REMARKS
STR					
205+65.0	TO	206+00.0		82.1	CH 13
216+46.31	TO	216+67.11	RT	22.7	E. WOODFORD ST.
224+76.4	TO	225+17.8	LT	78.5	W. MILL ST.
224+90.0	TO	225+13.1	RT	25.5	E. RANDOLPH ST.
			STR SUBTOTAL	208.8	
			STR ROUNDED SUBTOTAL	209.0	
ISBG					
20+67.7	TO	20+96.9	RT	31.3	S. STATE ST.
552+27.6	TO	552+37.6	00+00.0	26.1	E. MILL ST.
			ISBG SUBTOTAL	57.4	
			ISBG ROUNDED SUBTOTAL	57.0	
			ROUNDED TOTAL	266.0	

40603080 HOT-MIX ASPHALT BINDER COURSE, IL-19.0, N50

LOCATION				TON	REMARKS
STR					
210+00.00	TO	218+00.0	RT	171.3	NB CH 13
210+00.00	TO	218+00.0	LT	172.1	SB CH 13
216+17.7	TO	216+97.3	RT	24.3	E. WOODFORD ST.
222+25.0	TO	229+49.5	LT	171.3	SB CH 13
222+25.0	TO	229+49.5	RT	153.1	NB CH 13
224+57.6	TO	225+55.1	LT	32.6	W. MILL ST.
224+60.1	TO	225+43.3	RT	26.5	E. RANDOLPH ST.
229+49.5	TO	229+74.5	LT	44.4	SB CH 13 IN IDOT ROW
229+49.5	TO	229+74.5	RT	26.2	NB CH 13 IN IDOT ROW
			STR SUBTOTAL	821.5	
			STR ROUNDED SUBTOTAL	822.0	

40603080 HOT-MIX ASPHALT BINDER COURSE, IL-19.0, N50 (CONT'D)

LOCATION				TON	REMARKS
ISBG					
218+00.0	TO	219+35.7	LT	27.5	SB CH 13
218+00.0	TO	219+36.8	RT	28.3	NB CH 13
220+86.7	TO	222+25.0	LT	28.6	SB CH 13
220+86.7	TO	222+25.0	RT	28.2	NB CH 13
17+61.6	TO	21+70.00	RT	99.6	EB E. FRONT ST.
17+84.1	TO	21+70.00	LT	83.6	WB E. FRONT ST.
20+33.3	TO	21+70.00	RT	43.1	S. STATE ST.
			ISBG SUBTOTAL	338.8	
			ISBG ROUNDED SUBTOTAL	339.0	
			ROUNDED TOTAL	1161.0	

40603205 POLYMERIZED HOT-MIX ASPHALT BINDER COURSE, IL-9.5, N50

LOCATION				TON	REMARKS
STR					
205+65.0	TO	210+00.00	RT	15.6	NB CH 13 BINDER BUILD UP
205+65.0	TO	210+00.00	LT	18.0	SB CH 13 BINDER BUILD UP
206+00.0	TO	210+00.00	RT	40.4	NB CH 13
206+00.0	TO	210+00.00	LT	40.4	SB CH 13
210+00.00	TO	218+00.0	RT	77.9	NB CH 13
210+00.00	TO	218+00.0	LT	78.2	SB CH 13
216+17.7	TO	216+97.3	RT	11.0	E. WOODFORD ST.
222+25.0	TO	229+49.5	LT	77.8	SB CH 13
222+25.0	TO	229+49.5	RT	69.6	NB CH 13
229+49.5	TO	229+74.5	LT	12.3	SB CH 13 IN IDOT ROW
229+49.5	TO	229+74.5	RT	7.3	NB CH 13 IN IDOT ROW
224+57.6	TO	225+55.1	LT	14.8	W. MILL ST.
224+60.1	TO	225+43.3	RT	12.0	E. RANDOLPH ST.
550+10.0	TO	552+27.6	RT	26.2	E. MILL ST.
550+10.8	TO	552+27.6	LT	27.7	E. MILL ST.
			STR SUBTOTAL	529.3	
			STR ROUNDED SUBTOTAL	529.0	
ISBG					
218+00.0	TO	219+35.7	LT	12.5	SB CH 13
218+00.0	TO	219+36.8	RT	12.8	NB CH 13
220+86.7	TO	222+25.0	LT	13.0	SB CH 13
220+86.7	TO	222+25.0	RT	12.8	NB CH 13
17+61.6	TO	21+70.00	RT	45.3	EB E. FRONT ST.
17+84.1	TO	21+70.00	LT	38.0	WB E. FRONT ST.
20+33.3	TO	21+70.00	RT	19.6	S. STATE ST.
			ISBG SUBTOTAL	154.0	
			ISBG ROUNDED SUBTOTAL	154.0	
			ROUNDED TOTAL	683.0	

40604150 POLYMERIZED HOT-MIX ASPHALT SURFACE COURSE, IL-9.5, MIX "C", N50

LOCATION				TON	REMARKS
STR					
205+65.0	TO	210+00.0	RT	52.3	NB CH 13
205+65.0	TO	210+00.0	LT	52.5	SB CH 13
210+00.0	TO	218+00.0	RT	109.0	NB CH 13

40604150 POLYMERIZED HOT-MIX ASPHALT SURFACE COURSE, IL-9.5, MIX "C", N50 (CONT'D)

LOCATION				TON	REMARKS
210+00.0	TO	218+00.0	LT	109.5	SB CH 13
216+17.71	TO	216+97.34	RT	15.5	E. WOODFORD ST.
216+46.40	TO	216+66.87	RT	2.2	E. WOODFORD ST. BUTT JT.
222+25.0	TO	229+49.5	LT	109.0	SB CH 13
222+25.0	TO	229+49.5	RT	97.4	NB CH 13
229+49.5	TO	229+74.5	LT	17.2	SB CH 13 IN IDOT ROW
229+49.5	TO	229+74.5	RT	10.2	NB CH 13 IN IDOT ROW
224+57.6	TO	225+55.1	LT	20.7	W. MILL ST.
224+60.1	TO	225+43.3	RT	16.8	E. RANDOLPH ST.
224+76.4	TO	225+17.8	LT	7.7	W. MILL ST. BUTT JT.
224+90.0	TO	225+13.1	RT	2.5	E. RANDOLPH ST. BUTT JT.
550+10.0	TO	552+27.6	RT	25.9	E. MILL ST. NB
550+11.7	TO	552+27.6	LT	27.4	E. MILL ST. SB
			STR SUBTOTAL	675.7	
			STR ROUNDED SUBTOTAL	676.0	
ISBG					
218+00.0	TO	219+35.7	LT	17.5	SB CH 13
218+00.0	TO	219+36.8	RT	18.0	NB CH 13
220+86.7	TO	222+25.0	LT	18.2	SB CH 13
220+86.7	TO	222+25.0	RT	18.0	NB CH 13
17+61.6	TO	21+70.00	RT	63.4	EB E. FRONT ST.
17+84.1	TO	21+70.00	LT	53.2	WB E. FRONT ST.
20+33.3	TO	21+70.00	RT	27.4	S. STATE ST.
20+67.9	TO	20+96.9	RT	3.1	S. STATE ST. BUTT JT.
			ISBG SUBTOTAL	218.7	
			ISBG ROUNDED SUBTOTAL	219.0	
			ROUNDED TOTAL	895.0	

42000070 PAVEMENT CONNECTOR (HMA) FOR BRIDGE APPROACH SLAB

LOCATION			SQ YD	REMARKS
ISBG				
219+35.7	TO	219+51.0	123.6	CH 13
220+71.0	TO	220+86.7	63.9	CH 13
		ISBG SUBTO	187.5	
		ISBG ROUNDED S	188.0	
		ROUNDED TOTAL	188.0	

42300200 PORTLAND CEMENT CONCRETE DRIVEWAY PAVEMENT, 6 INCH

LOCATION				SQ YD	REMARKS
STR					
214+03.6	TO	214+33.3	RT	74.0	S CO HWY 13
217+30.2	TO	217+53.7	LT	29.3	S CO HWY 13
217+33.1	TO	217+59.7	RT	38.6	S CO HWY 13
217+55.1	TO	217+87.1	LT	19.0	S CO HWY 13
217+64.2	TO	217+91.1	RT	37.1	S CO HWY 13
227+33.0	TO	227+66.8	RT	82.8	N CO HWY 13
			STR TOT	280.7	
			STR ROUNDED TOTAL	281.0	

42300200 PORTLAND CEMENT CONCRETE DRIVEWAY PAVEMENT, 6 INCH (CONT'D)

LOCATION				SQ YD	REMARKS
ISBG					
20+94.4	TO	21+19.8	LT	34.3	E. FRONT ST.
			ISBG TOTA	34.3	
			ISBG ROUNDED TOTAL	34.0	
			ROUNDED TOTAL	315.0	

42300400 PORTLAND CEMENT CONCRETE DRIVEWAY PAVEMENT, 8 INCH

LOCATION				SQ YD	REMARKS
STR					
209+74.2	TO	210+05.3	RT	45.1	NB CH 13
210+82.5	TO	211+81.2	RT	169.6	NB CH 13
222+95.7	TO	223+37.4	LT	62.8	SB CH 13
225+75.2	TO	226+83.1	LT	163.8	SB CH 13
227+54.0	TO	228+20.0	LT	76.7	SB CH 13
228+06.6	TO	228+75.8	RT	128.4	NB CH 13
			STR SUBTOTAL	646.5	
			STR ROUNDED SUBTOTAL	646.0	
			ROUNDED TOTAL	646.0	

42400100 PORTLAND CEMENT CONCRETE SIDEWALK 4 INCH

LOCATION				SQ FT	REMARKS
STR					
222+25.0	TO	224+79.3	RT	1245.9	NB CH 13
224+62.6	TO	224+83.1	LT	262.8	SB CH 13
225+24.0	TO	227+29.7	RT	1017.8	NB CH 13
225+28.6	TO	225+54.9	LT	124.0	SB CH 13
227+70.1	TO	228+24.6	RT	250.9	NB CH 13
228+66.7	TO	128+51.0	RT	701.4	NB CH 13
228+78.2	TO	229+10.8	LT	126.7	SB CH 13
			STR SUBTOTAL	3729.5	
			STR ROUNDED SUBTOTAL	3729.0	
ISBG					
220+77.7	TO	222+25.0	RT	719.9	NB CH 13
18+18.8	TO	20+93.5	LT	1471.9	WB E. FRONT ST.
19+99.5	TO	20+61.1	RT	369.0	EB E. FRONT ST.
21+06.1	TO	21+43.1	RT	346.7	EB E. FRONT ST.
21+21.2	TO	21+31.9	LT	50.3	WB E. FRONT ST.
			ISBG SUBTOTAL	2957.8	
			ISBG ROUNDED SUBTOTAL	2958.0	
			ROUNDED TOTAL	6687.0	USE 6687.0

42400800 DETECTABLE WARNINGS

LOCATION			SQ FT	REMARKS
STR				
224+73.5	23.1'	RT	19.0	NB CH 13
224+78.6	31.4'	LT	10.0	SB CH 13
225+29.8	23.1'	RT	19.0	NB CH 13
225+33.9	31.7'	LT	10.0	SB CH 13
128+46.2	25.1'	RT	10.0	NB CH 13
		STR SUBTOTAL	68.0	
		STR ROUNDED SUBTOTAL	68.0	

42400800 DETECTABLE WARNINGS (CONT'D)

LOCATION			SQ FT	REMARKS
ISBG				
20+02.3	19.7'	LT	10.0	WB E. FRONT ST.
20+03.2	19.6'	RT	12.2	EB E. FRONT ST.
20+57.5	30.0'	RT	14.7	EB E. FRONT ST.
21+11.1	30.5'	RT	17.2	EB E. FRONT ST.
		ISBG SUBTOTAL	54.1	
		ISBG ROUNDED SUBTOTAL	54.0	
		ROUNDED TOTAL	122.0	

44000100 PAVEMENT REMOVAL

LOCATION			SQ YD	REMARKS
STR				
209+97.7	TO	217+97.7	1919.1	EX S CH 13
216+18.3	TO	216+90.4	130.3	E WOODFORD ST.
227+06.4	TO	234+56.6	3148.3	EX N CH 13
349+45.5	TO	349+85.1	226.8	W MILL ST.
450+12.2	TO	450+49.1	153.8	E RANDOLPH ST.
230+52.3	TO	232+16.8	752.4	EX E MILL ST.
		STR SUBTOTAL	6330.6	
		STR ROUNDED SUBTOTAL	6331.0	
ISBG				
217+97.7	TO	219+87.0	548.7	EX S CH 13
17+85.1	TO	21+70.6	1626.7	EX E FRONT ST.
225+00.0	TO	227+06.4	925.6	EX N CH 13
20+42.6	TO	21+17.0	126.6	S STATE ST.
		ISBG SUBTOTAL	3227.5	
		ISBG ROUNDED SUBTOTAL	3227.0	
		ROUNDED TOTAL	9558.0	

44000200 DRIVEWAY PAVEMENT REMOVAL

LOCATION		SQ YD	REMARKS
STR			
209+88.7	RT	45.1	EX S CH 13
211+30.1	RT	205.5	EX S CH 13
214+23.6	RT	72.9	EX S CH 13
214+42.7	LT	53.2	EX S CH 13
215+06.6	RT	52.0	EX S CH 13
217+43.8	RT	55.8	EX S CH 13
217+75.7	RT	12.5	EX S CH 13
228+02.4	LT	66.3	EX N CH 13
231+09.3	LT	178.2	EX N CH 13
232+32.0	RT	88.1	EX N CH 13
232+69.8	LT	113.8	EX N CH 13
	STR SUBTOTAL	943.5	
	STR ROUNDED SUBTOTAL	944.0	
ISBG			
19+08.8	LT	31.5	EX E FRONT ST
21+06.7	LT	9.5	EX E FRONT ST
	ISBG SUBTOTAL	41.0	
	ISBG ROUNDED SUBTOTAL	41.0	
	ROUNDED TOTAL	985.0	

44000500 COMBINATION CURB AND GUTTER REMOVAL

LOCATION				FOOT	REMARKS
STR					
234+84.5	TO	235+37.4	RT	99.6	EX N CH 13
			STR SUBTOTAL	99.6	
			STR ROUNDED SUBTOTAL	100.0	
ISBG					
219+07.8	TO	219+87.5	RT	92.1	EX S CH 13
225+21.6	TO	225+48.2	RT	43.2	EX N CH 13
18+04.3	TO	21+70.6	LT	366.4	EX E. FRONT ST.
18+43.9	TO	20+68.3	RT	243.2	EX E. FRONT ST.
20+98.5	TO	21+70.6	RT	90.1	EX E. FRONT ST.
			ISBG SUBTOTAL	834.9	
			ISBG ROUNDED SUBTOTAL	835.0	
			ROUNDED TOTAL	935.0	

44000600 SIDEWALK REMOVAL

LOCATION				SQ FT	REMARKS
STR					
227+02.0	TO	227+90.5	LT	326.2	EX N CH 13
229+44.7	TO	229+57.6	LT	179.3	EX N CH 13
230+34.7	TO	234+14.6	LT	1662.6	EX N CH 13
234+45.2	TO	234+63.8	RT	109.7	EX N CH 13
234+63.8	TO	234+89.5	RT	202.0	EX N CH 13
			STR SUBTOTAL	2479.8	
			STR ROUNDED SUBTOTAL	2480.0	
ISBG					
225+22.4	TO	226+18.9	RT	397.6	EX N CH 13
226+52.5	TO	227+02.0	LT	178.5	EX N CH 13
18+03.8	TO	18+99.6	LT	322.5	EX E. FRONT ST.
19+17.2	TO	21+22.8	LT	708.9	EX E. FRONT ST.
21+12.5	TO	21+17.5	RT	108.3	EX E. FRONT ST.
21+16.7	TO	21+31.7	RT	58.0	EX E. FRONT ST.
			ISBG SUBTOTAL	1773.8	
			ISBG ROUNDED SUBTOTAL	1774.0	
			ROUNDED TOTAL	4254.0	

48101500 AGGREGATE SHOULDERS, TYPE B 6"

LOCATION				SQ YD	REMARKS
STR					
205+65.0	TO	206+41.3	RT	33.7	NB CH 13
205+65.0	TO	206+40.3	LT	32.4	SB CH 13
206+69.1	TO	214+39.7	LT	427.9	SB CH 13
206+87.1	TO	209+78.0	RT	159.6	NB CH 13
210+02.6	TO	210+99.7	RT	49.9	NB CH 13
211+64.0	TO	214+08.1	RT	129.5	NB CH 13
			STR SUBTOTAL	833.0	
			STR ROUNDED SUBTOTAL	833.0	
			ROUNDED TOTAL	833.0	

48203020 HOT-MIX ASPHALT SHOULDERS, 5 3/4"

LOCATION				SQ YD	REMARKS
STR					
214+30.8	TO	216+17.7	RT	105.4	NB CH 13
214+58.7	TO	218+00.0	LT	188.2	SB CH 13
216+97.3	TO	218+00.0	RT	57.0	NB CH 13
222+25.0	TO	224+57.6	LT	130.3	SB CH 13
222+25.0	TO	224+60.1	RT	129.5	NB CH 13
225+43.3	TO	229+90.3	RT	332.5	NB CH 13
225+55.1	TO	229+09.6	LT	231.2	SB CH 13
			STR SUBTOTAL	1174.1	
			STR ROUNDED SUBTOTAL	1174.0	
ISBG					
218+00.0	TO	219+35.7	LT	73.2	SB CH 13
218+00.0	TO	218+38.4	RT	21.9	NB CH 13
220+86.7	TO	222+25.0	LT	77.9	SB CH 13
220+86.7	TO	222+25.0	RT	80.2	NB CH 13
17+61.6	TO	20+33.3	RT	165.4	EB E. FRONT ST.
18+23.2	TO	21+70.00	LT	205.3	WB E. FRONT ST.
			ISBG SUBTOTAL	623.9	
			ISBG ROUNDED SUBTOTAL	624.0	
			ROUNDED TOTAL	1798.0	

50104400 CONCRETE HEADWALL REMOVAL

LOCATION			EACH	REMARKS
STR				
209+46.1	15.9'	RT	1.0	EX S CH 13
211+74.4	25.6'	LT	1.0	EX S CH 13
		STR SUBTOTAL	2.0	
		TOTAL	2.0	

50105220 PIPE CULVERT REMOVAL

LOCATION				FOOT	REMARKS
STR					
206+33.88	TO	206+68.3	LT	34.5	EX S CH 13
206+35.43	TO	206+91.7	RT	56.3	EX S CH 13
209+37.64	TO	209+46.1	RT	19.6	EX S CH 13
209+71.20	TO	210+05.3	RT	34.2	EX S CH 13
210+73.31	TO	211+58.1	RT	82.5	EX S CH 13
15+85.02			RT	6.2	EX W FRONT ST
16+54.32			RT	9.3	EX W FRONT ST
16+57.58			RT	9.3	EX W FRONT ST
			STR SUBTOTAL	251.8	
			STR ROUNDED SUBTOTAL	252.0	
			ROUNDED TOTAL	252.0	

50800105 REINFORCEMENT BARS

LOCATION			POUND	REMARKS
STR				
211+76.8	26.0'	LT	30.0	
		STR SUBTOTAL	30.0	
		STR ROUNDED SUBTOTAL	30.0	
		ROUNDED TOTAL	30.0	

54001001 BOX CULVERT END SECTIONS, CULVERT NO. 1

LOCATION			EACH	REMARKS
STR				
211+82.2	43.0'	LT	1.0	
		STR SUBTOTAL	1.0	
		ROUNDED TOTAL	1.0	

54213654 PRECAST REINFORCED CONCRETE FLARED END SECTIONS 8"

LOCATION			EACH	REMARKS
ISBG				
220+31.7	181.8'	LT	1.0	
		ISBG SUBTOTAL	1.00	
		ISBG ROUNDED SUBTOTAL	1.0	
		ROUNDED TOTAL	1.0	

54213657 PRECAST REINFORCED CONCRETE FLARED END SECTIONS 12"

LOCATION			EACH	REMARKS
ISBG				
220+10.1	112.5'	LT	1.0	
		ISBG SUBTOTAL	1.00	
		ISBG ROUNDED SUBTOTAL	1.0	
		ROUNDED TOTAL	1.0	

54248510 CONCRETE COLLAR

LOCATION			CU YD	REMARKS
STR				
211+76.8	26.0'	LT	0.41	
		STR SUBTOTAL	0.41	
		STR ROUNDED SUBTOTAL	0.4	
		ROUNDED TOTAL	0.4	

54262715 METAL FLARED END SECTIONS 15"

LOCATION			EACH	REMARKS
STR				
206+32.1	29.4'	RT	1.0	
206+91.3	30.1'	RT	1.0	
206+31.8	30.4'	LT	1.0	
206+76.9	28.8'	LT	1.0	
		STR SUBTOTAL	4.00	
		TOTAL	4.0	

54262836 METAL FLARED END SECTIONS, EQUIVALENT ROUND-SIZE 36"

LOCATION			EACH	REMARKS
STR				
209+70.4	29.5'	RT	1.0	
		STR SUBTOTAL	1.0	
		TOTAL	1.0	

542C0220 PIPE CULVERTS, CLASS C, TYPE 1 15"

LOCATION			FOOT	REMARKS
STR				
206+32.1 TO 206+91.3		RT	60.0	
206+31.8 TO 206+73.9		LT	43.0	
		STR SUBTOTAL	103.0	
		STR ROUNDED SUBTOTAL	103.0	
		ROUNDED TOTAL	103.0	

55100700 STORM SEWER REMOVAL 15"

LOCATION			FOOT	REMARKS
STR				
229+64.7		LT/RT	48.2	EX N CH 13
		STR SUBTOTAL	48.2	
		STR ROUNDED SUBTOTAL	48.0	
ISBG				
225+31.1 TO 225+46.7		RT	37.5	EX N CH 13
226+00.9 TO 227+00.6		RT	149.3	EX N CH 13
18+17.4 TO 18+21.5		LT/RT	64.0	EX E. FRONT ST.
18+32.9 TO 19+25.6		LT	93.5	EX E. FRONT ST.
18+45.8 TO 18+94.7		LT	58.7	EX E. FRONT ST.
19+25.6 TO 19+64.9		LT/RT	57.6	EX E. FRONT ST.
19+64.9 TO 20+63.6		RT	99.5	EX E. FRONT ST.
20+63.6 TO 21+03.2		RT	39.5	EX E. FRONT ST.
		ISBG SUBTOTAL	599.6	
		ISBG ROUNDED SUBTOTAL	600.0	
		ROUNDED TOTAL	648.0	

60100060 CONCRETE HEADWALLS FOR PIPE DRAINS

LOCATION			EACH	REMARKS
STR				
209+39.3	34.4'	RT	1.0	PR CH 13
		STR SUBTOTAL	1.0	
ISBG				
220+09.1	116.3'	LT	1.0	PR CH 13
		ISBG SUBTOTAL	1.0	
		TOTAL	2.0	

*SEE STRUCTURE PLANS FOR ADDITIONAL QUANTITIES.

60500040 REMOVING MANHOLES

LOCATION			EACH	REMARKS
ISBG				
219+58.9	24.6'	RT	1.0	EX S CH 13 - ES05
		STR SUBTOTAL	1.0	
		STR ROUNDED SUBTOTAL	1.0	
		ROUNDED TOTAL	1.0	

60500060 REMOVING INLETS

LOCATION			EACH	REMARKS
STR				
227+00.61	27.2'	RT	1.0	EX N CH 13
232+78.18	18.4'	RT	1.0	EX N CH 13 - ES21
233+18.94	23.0'	LT	1.0	EX N CH 13
		STR SUBTOTAL	3.0	
ISBG				
219+61.53	44.9'	RT	1.0	EX S CH 13
225+46.78	16.6'	RT	1.0	EX N CH 13
18+94.75	38.0'	LT	1.0	EX E. FRONT ST.
19+25.66	19.6'	LT	1.0	EX E. FRONT ST.
19+64.88	22.5'	RT	1.0	EX E. FRONT ST.
20+63.62	34.4'	RT	1.0	EX E. FRONT ST.
21+03.15	35.1'	RT	1.0	EX E. FRONT ST.
		ISBG SUBTOTAL	7.0	
		TOTAL	10.0	

60603800 COMBINATION CONCRETE CURB AND GUTTER, TYPE B-6.12

LOCATION			FOOT	REMARKS
STR				
214+78.3 TO 216+45.34		RT	187.4	PR CH 13
214+36.0 TO 218+00.0		LT	360.5	PR CH 13
216+67.87 TO 218+00.0		RT	149.4	PR CH 13
222+25.0 TO 224+86.6		LT	279.2	PR CH 13
222+25.0 TO 224+89.0		RT	279.9	PR CH 13
225+14.1 TO 229+90.3		RT	513.0	PR CH 13
225+18.6 TO 229+11.3		LT	436.5	PR CH 13
		STR SUBTOTAL	2205.9	
		STR ROUNDED SUBTOTAL	2206.0	
ISBG				
218+00.0 TO 218+87.9		LT	84.8	PR CH 13
218+00.0 TO 218+74.7		RT	78.2	PR CH 13
220+86.7 TO 222+25.0		LT	140.6	PR CH 13
220+86.7 TO 222+25.0		RT	136.2	PR CH 13
17+84.9 TO 20+66.7		RT	306.8	PR E. FRONT ST.
18+16.9 TO 21+40.00		LT	322.0	PR E. FRONT ST.
		ISBG SUBTOTAL	1068.6	
		ISBG ROUNDED SUBTOTAL	1069.0	
		ROUNDED TOTAL	3275.0	

60604300 COMBINATION CONCRETE CURB AND GUTTER, TYPE B-6.12 (VARIABLE WIDTH GUTTER FLAG)

LOCATION				FOOT	REMARKS
STR					
126+92.10	TO	126+94.43	RT	2.3	EX IL 116
128+48.56	TO	128+51.28	RT	2.7	EX IL 116
			STR SUBTOTAL	5.0	
			STR ROUNDED SUBTOTAL	5.0	
ISBG					
20+97.87	TO	21+70.00	RT	88.7	PR E. FRONT ST.
21+40.00	TO	21+70.00	LT	30.0	PR E. FRONT ST.
			ISBG SUBTOTAL	118.7	
			ISBG ROUNDED SUBTOTAL	119.0	
			ROUNDED TOTAL	124.0	

60605000 COMBINATION CONCRETE CURB AND GUTTER, TYPE B-6.24

LOCATION				FOOT	REMARKS
STR					
126+78.73	TO	126+92.10	RT	13.4	EX IL 116
128+51.28	TO	129+48.38	RT	95.8	EX IL 116
			ISBG SUBTOTAL	109.2	
			ISBG ROUNDED SUBTOTAL	109.0	
			ROUNDED TOTAL	109.0	

63000001 STEEL PLATE BEAM GUARDRAIL, TYPE A, 6 FOOT POSTS

LOCATION				FOOT	REMARKS
ISBG					
16+38.4	TO	16+38.5	LT/RT	25.0	EX W FRONT ST
			ISBG SUBTOTAL	25.0	
			TOTAL	25.0	

63100045 TRAFFIC BARRIER TERMINAL, TYPE 2

LOCATION			EACH	REMARKS
ISBG				
16+38.4	18.3'	LT	1.0	EX W. FRONT ST.
16+38.5	6.7'	RT	1.0	EX W. FRONT ST.
		ISBG SUBTOTAL	2.0	
		TOTAL	2.0	

63100085 TRAFFIC BARRIER TERMINAL, TYPE 6

LOCATION					EACH	REMARKS
ISBG						
219+26.2	TO	219+63.7	LT	00+00.0	1.0	SB CH 13
220+48.6	TO	220+86.1	LT	00+00.0	1.0	SB CH 13
			ISBG SUBTOTAL		2.0	
			TOTAL		2.0	

63200310 GUARDRAIL REMOVAL

LOCATION					FOOT	REMARKS
ISBG						
219+43.0	TO	220+15.4	LT/RT	00+00.0	160.0	CH 13
18+23.0	TO	18+95.4	LT	00+00.0	77.6	E FRONT ST.
			ISBG SUBTOTAL		237.6	
			ISBG ROUNDED SUBTOTAL		238.0	
			ROUNDED TOTAL		238.0	

66700205 PERMANENT SURVEY MARKERS, TYPE I

LOCATION			EACH	REMARKS
STR				
206+70.95	0.0'	LT/RT	1.0	CH 13
		STR SUBTOTAL	1.0	
		TOTAL	1.0	

66700305 PERMANENT SURVEY MARKERS, TYPE II

LOCATION			EACH	REMARKS
ISBG				
220+26.20	55.6'	LT	1.0	CH 13
		ISBG SUBTOTAL	1.0	
		TOTAL	1.0	

66900200 NON-SPECIAL WASTE DISPOSAL

LOCATION			CU YD	REMARKS
STR				
206+50.0	TO	208+00.0	120.9	PROJECT SITE 1
225+50.0	TO	227+00.0	367.2	PROJECT SITE 2
227+00.0	TO	228+00.0	279.0	PROJECT SITE 3
		STR SUBTOTAL	767.2	
		STR ROUNDED SUBTOTAL	767.0	
		ROUNDED TOTAL	767.0	

70300150 SHORT TERM PAVEMENT MARKING REMOVAL

LOCATION				SQ FT	REMARKS
STR					
LINE 4"					
205+65.0	TO	218+00.0	LT/RT	823.3	DOUBLE YELLOW - CH13
205+65.0	TO	218+00.0	LT	411.9	WHITE - SB CH13
205+65.0	TO	216+17.7	RT	350.7	WHITE - NB CH 13
216+97.3	TO	218+00.0	RT	34.2	WHITE - NB CH 13
222+25.0	TO	229+49.6	LT/RT	483.1	DOUBLE YELLOW - CH13
222+25.0	TO	224+57.6	LT	78.1	WHITE - SB CH13
222+25.0	TO	224+60.3	RT	77.9	WHITE - NB CH 13
225+43.3	TO	229+90.3	RT	170.6	WHITE - NB CH 13
225+55.1	TO	229+09.6	LT	139.2	WHITE - SB CH13
229+10.8	TO	229+64.2	LT	50.6	WHITE - ISLAND CH 13
LINE 6"					
224+71.8	TO	224+78.3	LT/RT	42.5	WHITE - CROSSWALK NB CH13
224+78.3	TO	225+30.6	RT	46.0	WHITE - CROSSWALK NB CH14

70300150 SHORT TERM PAVEMENT MARKING REMOVAL (CONT'D)

LOCATION				SQ FT	REMARKS
LINE 12"					
229+10.8	TO	229+64.2	LT	127.2	PAINTED ISLAND
LINE 24"					
229+49.6			RT	35.7	STOP BAR - CH 13
			STR SUBTOTAL	2871.0	
			STR ROUNDED SUBTOTAL	2871.0	
ISBG					
LINE 4"					
17+80.0	TO	20+54.02	RT	94.5	WHITE - EB E. FRONT ST.
18+14.5	TO	21+70.00	LT/RT	237.0	DOUBLE YELLOW - E. FRONT ST
18+11.1	TO	21+70.00	LT	123.3	WHITE - WB E. FRONT ST.
218+00.0	TO	222+25.0	LT/RT	29.0	DOUBLE YELLOW - CH13
218+00.0	TO	222+25.0	LT	141.0	WHITE - SB CH13
218+00.0	TO	218+76.7	RT	88.6	WHITE - NB CH13
219+62.5	TO	222+25.0	RT	88.6	WHITE - NB CH13
LINE 24"					
18+14.5			LT	56.9	STOP BAR - E. FRONT ST.
			ISBG SUBTOTAL	858.7	
			ISBG ROUNDED SUBTOTAL	859.0	
			ROUNDED TOTAL	3730.0	

70300221 TEMPORARY PAVEMENT MARKING - LINE 4"- PAINT

LOCATION				FOOT	REMARKS
STR					
205+65.0	TO	218+00.0	LT/RT	2470.0	DOUBLE YELLOW - CH13
205+65.0	TO	218+00.0	LT	1235.7	WHITE - SB CH13
205+65.0	TO	216+17.7	RT	1052.2	WHITE - NB CH 13
216+97.3	TO	218+00.0	RT	102.7	WHITE - NB CH 13
222+25.0	TO	229+49.6	LT/RT	1449.3	DOUBLE YELLOW - CH13
222+25.0	TO	224+57.6	LT	234.2	WHITE - SB CH13
222+25.0	TO	224+60.3	RT	233.6	WHITE - NB CH 13
225+43.3	TO	229+90.3	RT	511.8	WHITE - NB CH 13
225+55.1	TO	229+09.6	LT	417.5	WHITE - SB CH13
229+10.8	TO	229+64.2	LT	151.8	WHITE - ISLAND CH 13
			STR SUBTOTAL	7858.7	
			STR ROUNDED SUBTOTAL	7859.0	
ISBG					
17+80.0	TO	20+54.02	RT	283.4	WHITE - EB E. FRONT ST.
18+14.5	TO	21+70.00	LT/RT	711.0	DOUBLE YELLOW - E. FRONT ST
18+11.1	TO	21+70.00	LT	370.0	WHITE - WB E. FRONT ST.
218+00.0	TO	222+25.0	LT/RT	870.9	DOUBLE YELLOW - CH13
218+00.0	TO	222+25.0	LT	422.9	WHITE - SB CH13
218+00.0	TO	218+76.7	RT	265.7	WHITE - NB CH13
219+62.5	TO	222+25.0	RT	265.7	WHITE - NB CH13
			ISBG SUBTOTAL	3189.4	
			ISBG ROUNDED SUBTOTAL	3189.0	
			ROUNDED TOTAL	11048.0	

70300241 TEMPORARY PAVEMENT MARKING - LINE 6"- PAINT

LOCATION				FOOT	REMARKS
STR					
224+71.8	TO	224+78.3	LT/RT	85.0	WHITE - CROSSWALK NB CH13
224+78.3	TO	225+30.6	RT	92.0	WHITE - CROSSWALK NB CH14
			STR SUBTOTAL	177.0	
			STR ROUNDED SUBTOTAL	177.0	
			TOTAL	177.0	

70300261 TEMPORARY PAVEMENT MARKING - LINE 12"- PAINT

LOCATION				FOOT	REMARKS
STR					
229+10.8	TO	229+64.2	LT	127.2	PAINTED ISLAND
			STR SUBTOTAL	127.2	
			STR ROUNDED SUBTOTAL	127.0	
			ROUNDED TOTAL	127.0	

70300281 TEMPORARY PAVEMENT MARKING - LINE 24"- PAINT

LOCATION				FOOT	REMARKS
STR					
229+49.6			RT	17.9	STOP BAR - CH 13
			STR SUBTOTAL	17.9	
			STR ROUNDED SUBTOTAL	18.0	

70300281 TEMPORARY PAVEMENT MARKING - LINE 24"- PAINT (CONT'D)

LOCATION				FOOT	REMARKS
ISBG					
18+14.5			LT	28.4	STOP BAR - E. FRONT ST.
			ISBG SUBTOTAL	28.4	
			ISBG ROUNDED SUBTOTAL	28.0	
			ROUNDED TOTAL	46.0	

72000100 SIGN PANEL - TYPE 1

LOCATION				SQ FT	REMARKS
STR					
229+49.5		26.6'	RT	4.9	CH 13 (MAIN ST)
			STR SUBTOTAL	4.9	
			STR ROUNDED SUBTOTAL	5.0	
ISBG					
14+85.0		20.0'	RT	6.3	W FRONT ST
16+41.1		14.3'	RT	6.3	W FRONT ST
16+40.9		9.7'	LT	6.3	W FRONT ST
			ISBG SUBTOTAL	18.9	
			ISBG ROUNDED SUBTOTAL	19.0	
			ROUNDED TOTAL	24.0	

72000200 SIGN PANEL - TYPE 2

LOCATION				SQ FT	REMARKS
ISBG					
16+41.0		2.3'	RT	10.0	EX W FRONT ST
			ISBG SUBTOTAL	10.0	
			TOTAL	10.0	

MODEL: Default
FILE NAME: S:\23\2016\2371601\2.22 (Woodford Co CH 13 at Front St Ph III)\CADD\CADD Sheets\D416012-sht-Schedules.dgn

MAURER-STUTZ ENGINEERS SURVEYORS

USER NAME = jdspiller	DESIGNED - CLD	REVISED -	
	DRAWN - CAD	REVISED -	
PLOT SCALE = 0.1667 ' / in.	CHECKED - JDS	REVISED -	
PLOT DATE = 11/12/2024	DATE - 10/18/2024	REVISED -	

WOODFORD COUNTY HIGHWAY DEPARTMENT

COUNTY HIGHWAY 13 RECONSTRUCTION AT FRONT ST.
SCHEDULE OF QUANTITIES

SCALE: | SHEET 14 OF 18 SHEETS | STA. | TO STA.

F.A.S. RTE.	SECTION	COUNTY	TOTAL SHEETS	SHEET NO.
364	20-00091-03-BR	WOODFORD	114	28
		CONTRACT NO. 89854		

72501000 TERMINAL MARKER - DIRECT APPLIED

LOCATION				EACH	REMARKS
ISBG					
218+88.7		22.6'	LT	1.0	SB CH 13
221+23.6		22.6'	LT	1.0	SB CH 13
			ISBG SUBTOTAL	2.0	
			TOTAL	2.0	

72900100 METAL POST - TYPE A

LOCATION				FOOT	REMARKS
STR					
229+49.5		26.6'	RT	12.6	PR CH 13
			STR SUBTOTAL	12.6	
			STR ROUNDED SUBTOTAL	13.0	
ISBG					
14+85.0		20.0'	RT	12.6	W FRONT ST
16+41.1		14.3'	RT	12.6	W FRONT ST
16+40.9		9.7'	LT	12.6	W FRONT ST
16+41.0		2.3'	RT	25.2	W FRONT ST (2 POSTS)
			ISBG SUBTOTAL	63.0	
			ISBG ROUNDED SUBTOTAL	63.0	
			TOTAL	76.0	

78001110 PAINT PAVEMENT MARKING - LINE 4"

LOCATION				FOOT	REMARKS
STR					
205+65.0	TO	218+00.0	LT/RT	2470.0	DOUBLE YELLOW - CH13
205+65.0	TO	218+00.0	LT	1235.7	WHITE - SB CH13
205+65.0	TO	216+17.7	RT	1052.2	WHITE - NB CH 13
216+97.3	TO	218+00.0	RT	102.7	WHITE - NB CH 13
222+25.0	TO	229+49.6	LT/RT	1449.3	DOUBLE YELLOW - CH13
222+25.0	TO	224+57.6	LT	234.2	WHITE - SB CH13
222+25.0	TO	224+60.3	RT	233.6	WHITE - NB CH 13
225+43.3	TO	229+90.3	RT	511.8	WHITE - NB CH 13
225+55.1	TO	229+09.6	LT	417.5	WHITE - SB CH13
229+10.8	TO	229+64.2	LT	151.8	WHITE - ISLAND CH 13
			STR SUBTOTAL	7858.7	
			STR ROUNDED SUBTOTAL	7859.0	
ISBG					
17+80.0	TO	20+54.02	RT	283.4	WHITE - EB E. FRONT ST.
18+14.5	TO	21+70.00	LT/RT	711.0	DOUBLE YELLOW - E. FRONT ST
18+11.1	TO	21+70.00	LT	370.0	WHITE - WB E. FRONT ST.
218+00.0	TO	222+25.0	LT/RT	870.9	DOUBLE YELLOW - CH13
218+00.0	TO	222+25.0	LT	422.9	WHITE - SB CH13
218+00.0	TO	218+76.7	RT	265.7	WHITE - NB CH13
219+62.5	TO	222+25.0	RT	265.7	WHITE - NB CH13
			ISBG SUBTOTAL	3189.4	
			ISBG ROUNDED SUBTOTAL	3189.0	
			ROUNDED TOTAL	11048.0	

78001130 PAINT PAVEMENT MARKING - LINE 6"

LOCATION				FOOT	REMARKS
STR					
224+71.8	TO	224+78.3	LT/RT	85.0	WHITE - CROSSWALK NB CH13
224+78.3	TO	225+30.6	RT	92.0	WHITE - CROSSWALK NB CH14
			STR SUBTOTAL	177.0	
			STR ROUNDED SUBTOTAL	177.0	
			TOTAL	177.0	

78001150 PAINT PAVEMENT MARKING - LINE 12"

LOCATION					FOOT	REMARKS
STR						
229+10.8	TO	229+64.2	LT	00+00.0	127.2	PAINTED ISLAND
			STR SUBTOTAL		127.2	
			STR ROUNDED SUBTOTAL		127.0	
			ROUNDED TOTAL		127.0	

78001180 PAINT PAVEMENT MARKING - LINE 24"

LOCATION		FOOT	REMARKS
STR			
229+49.6	RT	17.9	STOP BAR - CH 13
	STR SUBTOTAL	17.9	
	STR ROUNDED SUBTOTAL	18.0	

78001180 PAINT PAVEMENT MARKING - LINE 24" (CONT'D)

LOCATION		FOOT	REMARKS
ISBG			
18+14.5	LT	28.4	STOP BAR - E. FRONT ST.
	ISBG SUBTOTAL	28.4	
	ISBG ROUNDED SUBTOTAL	28.0	
	ROUNDED TOTAL	46.0	

78200005 GUARDRAIL REFLECTORS, TYPE A

LOCATION				EACH	REMARKS
ISBG					
218+88.7	TO	219+63.7	LT	4.0	SB CH 13
220+48.6	TO	221+23.6	LT	4.0	SB CH13
			ISBG SUBTOTAL	8.0	
			TOTAL	8.0	

A2001016 TREE, ACER RUBRUM (RED MAPLE), 2" CALIPER, BALLED AND BURLAPPED

LOCATION		EACH	REMARKS
ISBG			
TO BE DETERMINED		1.0	RELOCATED COAL MINER'S MEMORIAL
	ISBG SUBTOTAL	1.0	
	TOTAL	1.0	

D2002248 EVERGREEN, PICEA PUNGENS GLAUCA (COLORADO BLUE SPRUCE), 4' HEIGHT, BALLED AND BURLAPPED

LOCATION		EACH	REMARKS
ISBG			
TO BE DETERMINED		1.0	RELOCATED COAL MINER'S MEMORIAL
	ISBG SUBTOTAL	1.0	
	TOTAL	1.0	

LR631020 TRAFFIC BARRIER TERMINAL, TYPE 1

LOCATION				EACH	REMARKS
ISBG					
218+88.7	TO	219+26.2	LT	1.0	SB CH 13
220+86.1	TO	221+23.6	LT	1.0	SB CH 13
			ISBG SUBTOTAL	2.0	
			TOTAL	2.0	

X2010404 STUMP REMOVAL

LOCATION				EACH	REMARKS
ISBG					
218+99.1		42.3'	RT	1.0	EX S CH 13
219+61.6		39.4'	RT	1.0	EX S CH 13
19+23.6		47.3'	RT	1.0	EX E. FRONT ST.
			ISBG SUBTOTAL	3.0	
			TOTAL	3.0	

X4401198 HOT-MIX ASPHALT SURFACE REMOVAL, VARIABLE DEPTH

LOCATION				SQ YD	REMARKS
STR					
206+00.0	TO	210+00.0		928.6	CO HWY 13
			STR SUBTOTAL	928.6	
			STR ROUNDED SUBTOTAL	929.0	
			ROUNDED TOTAL	929.0	

X6060032 CONCRETE GUTTER TRANSITION

LOCATION				FOOT	REMARKS
STR					
214+68.56	TO	214+78.31	RT	10.0	NB CH 13
214+25.7	TO	214+36.0	LT	10.0	SB CH 13
			STR SUBTOTAL	20.0	
			STR ROUNDED SUBTOTAL	20.0	
ISBG					
218+87.9	TO	219+11.0	LT	22.3	SB CH 13
			ISBG SUBTOTAL	22.3	
			ISBG ROUNDED SUBTOTAL	22.0	
			ROUNDED TOTAL	42.0	

X6063000 CONCRETE GUTTER, TYPE B (SPECIAL)

LOCATION				FOOT	REMARKS
STR					
214+00.0	TO	214+25.7	LT	25.5	SB CH 13
214+39.06	TO	214+68.56	RT	31.5	NB CH 13
			STR SUBTOTAL	57.0	
			STR ROUNDED SUBTOTAL	57.0	
ISBG					
219+11.03	TO	219+42.80	LT	31.2	SB CH 13
			ISBG SUBTOTAL	31.2	
			ISBG ROUNDED SUBTOTAL	31.0	
			ROUNDED TOTAL	88.0	

X6640104 FENCE REMOVAL

LOCATION				FOOT	REMARKS
ISBG					
17+38.7	TO	18+38.0	LT	118.1	WB E. FRONT ST.
			ISBG SUBTOTAL	118.1	
			ISBG ROUNDED SUBTOTAL	118.0	
			ROUNDED TOTAL	118.0	

Z0004522 HOT-MIX ASPHALT DRIVEWAY PAVEMENT, 6"

LOCATION				SQ YD	REMARKS
STR					
206+31.50	TO	206+72.40	LT	78.8	CO HWY 13
206+38.19	TO	206+90.72	RT	123.6	CO HWY 13
214+36.0	TO	214+63.2	LT	50.2	CO HWY 13
214+93.21	TO	215+24.41	RT	33.3	CO HWY 13
450+68.17	TO	451+11.99	RT	65.7	E. RANDOLPH ST.
			STR TOT	351.7	
			STR ROUNDED TOTAL	352.0	
ISBG					
218+60.44	TO	218+87.85	LT	12.2	CO HWY 13
			ISBG TOTAL	12.2	
			ISBG ROUNDED TOTAL	12.0	
			ROUNDED TOTAL	364.0	

Z0070150 REMOVE AND RELOCATE EXISTING MONUMENT

LOCATION				EACH	REMARKS
ISBG					
TO BE DETERMINED				1.0	RELOCATED COAL MINER'S MEMORIAL
			ISBG SUBTOTAL	1.0	
			ISBG ROUNDED SUBTOTAL	1.0	
			ROUNDED TOTAL	1.0	

PROPOSED STRUCTURE SCHEDULE

STRUCTURE NUMBER	STATION	OFFSET		54213660 PRECAST REINFORCED CONCRETE FLARED END SECTIONS 15"		54213663 PRECAST REINFORCED CONCRETE FLARED END SECTIONS 18"		60219300 MANHOLES, TYPE A, 4'-DIAMETER, TYPE 11 FRAME AND GRATE		60234200 INLETS, TYPE A, TYPE 1 FRAME, OPEN LID		60240215 INLETS, TYPE B, TYPE 1 FRAME, CLOSED LID		60240310 INLETS, TYPE B, TYPE 11 FRAME AND GRATE		60240312 INLETS, TYPE B, TYPE 11V FRAME AND GRATE		X6022230 MANHOLES, TYPE A, 4'-DIAMETER, WITH SPECIAL FRAME AND GRATE		X6022930 MANHOLES, TYPE A, 5'-DIAMETER, WITH SPECIAL FRAME AND GRATE		X6024502 INLETS, TYPE B, WITH SPECIAL FRAME AND GRATE		RIM / CONTROL ELEVATION	INVERT ELEVATIONS N	E	S	W
				STR	ISBG	STR	ISBG	STR	ISBG	STR	ISBG	STR	ISBG	STR	ISBG	STR	ISBG	STR	ISBG	STR	ISBG	STR	ISBG					
S04	218+86.6	30.6	RT														1							718.61	713.16		713.26	
S06	219+57.7	52.0	RT														1							717.14	712.50		712.60	
S07	220+85.2	50.2	LT								1													711.00			707.75	
S08	220+19.2	45.1	LT		1																			707.25	707.25		707.25	
S09	21+04.0	35.1	RT												1									717.53				713.30
S10	20+62.0	34.3	RT														1							717.71		712.89		712.79
S11	19+40.2	18.6	RT												1									716.32	711.87			
S12	19+40.1	18.5	LT						1															716.32	710.91	711.50	711.50	
S13	222+58.0	18.6	RT															1						712.24	704.53		704.53	705.07
S14	222+58.0	18.6	LT													1								712.24		705.26		
S15	224+60.1	18.6	RT															1						711.09	705.53		705.53	706.07
S16	224+57.7	18.6	LT													1								711.10	706.36	706.26		
S17	225+55.1	18.6	RT					1																710.73		706.03	706.00	706.27
S18	225+55.1	18.6	LT											1										710.73		706.46		
S19	550+53.0	10.5	LT																			1		708.99		706.73		706.70
S19A	550+53.0	10.5	RT																			1		708.99				706.85
ES21	227+96.1	18.4	RT													1								720.80	714.63		714.53	714.53
S22	228+34.3	20.5	LT													1								722.73	718.46		718.36	
S28	210+71.18	24.4	RT																	1				720.27	716.67		716.77	
S31	220+04.9	53.6	RT		1																			711.62	711.62		711.62	
S32	220+33.2	111.3	RT		1																			710.00	710.00		710.00	
S33	220+49.5	46.1	RT				1																	703.50	703.50		703.50	
S34	224+82.6	20.1	LT									1												711.00			706.51	706.61
		TOTALS:		0	3	0	1	1	1	0	1	1	0	1	2	4	3	2	0	1	0	2	0					

NOTES: 1. SPECIAL FRAME AND GRATE FOR TYPE A MANHOLES SHALL BE A TYPE 37 FRAME PER IDOT HIGHWAY STANDARDS
2. SPECIAL FRAME AND GRATE FOR TYPE B INLETS SHALL BE NEENAH R-3492. INLET LID SHALL BE CONSTRUCTED WITH D4 CADD STANDARD 602101-D4. BOLT GRATE TO FRAME.

EXISTING STRUCTURE SCHEDULE

STRUCTURE NUMBER	STATION	OFFSET		60255500 MANHOLES TO BE ADJUSTED		60258200 MANHOLES TO BE RECONSTRUCTED WITH NEW TYPE 1 FRAME, CLOSED LID		60260100 INLETS TO BE ADJUSTED		60260400 INLETS TO BE ADJUSTED WITH NEW TYPE 1 FRAME, CLOSED LID		60260505 INLETS TO BE ADJUSTED WITH NEW TYPE 3V FRAME AND GRATE		60261320 INLETS TO BE ADJUSTED WITH NEW TYPE 11V FRAME AND GRATE		60263000 INLETS TO BE RECONSTRUCTED WITH NEW TYPE 1 FRAME, CLOSED LID		EXISTING RIM / CONTROL ELEVATION	PROPOSED RIM / CONTROL ELEVATION
				STR	ISBG	STR	ISBG	STR	ISBG	STR	ISBG	STR	ISBG	STR	ISBG	STR	ISBG		
	208+35.1	23.1	RT	1														721.69	722.08
	209+56.5	23.4	RT	1														721.27	720.74
	220+39.0	43.3	LT		1													714.58	714.58
ES01	212+86.6	25.3	RT					1										719.06	719.23
ES02	214+38.4	24.3	RT					1										721.29	721.81
ES03	216+91.6	19.4	RT											1				722.61	722.77
ES20	224+85.5	28.1	RT													1		710.27	710.81
ES23	228+73.4	22.4	RT			1												721.97	724.79
ES24	128+65.6	20.5	RT									1						726.51	726.81
ES25	552+05.5	6.6	LT	1														710.87	710.80
ES26	218+15.8	8.1	RT		1													719.64	720.69
ES27	212+67.4	12.7	RT	1														719.91	721.66
ES29	229+31.0	39.9	LT							1								726.10	726.26
ES30	128+75.9	11.1	RT	1														727.12	727.12
		TOTALS:		5	2	1	0	2	0	1	0	1	0	1	0	1	0		

MODEL: Default
FILE NAME: S:\23\2016\23716012.22 (Woodford Co CH 13 at Front St Ph III)\CADD\CADD Sheets\D416012-sht-Schedules.dgn

MAURER-STUTZ ENGINEERS SURVEYORS

USER NAME = jdspiller	DESIGNED - CLD	REVISED -
	DRAWN - CAD	REVISED -
PLOT SCALE = 0.1667 ' / in.	CHECKED - JDS	REVISED -
PLOT DATE = 11/12/2024	DATE - 10/18/2024	REVISED -

WOODFORD COUNTY HIGHWAY DEPARTMENT

COUNTY HIGHWAY 13 RECONSTRUCTION AT FRONT ST.
SCHEDULE OF QUANTITIES

SCALE: | SHEET 17 OF 18 SHEETS | STA. | TO STA.

F.A.S. RTE.	SECTION	COUNTY	TOTAL SHEETS	SHEET NO.
364	20-00091-03-BR	WOODFORD	114	31

CONTRACT NO. 89854

PIPE SCHEDULE

PIPE NUMBER	FROM STRUCTURE	US ELEVATION	TO STUCTURE	DS ELEVATION	PAY ITEMS																SLOPE
					20800150		550A4500		550B0050		550B0070		550B0340		550B0360		550B0380		Z0056669		
					TRENCH BACKFILL		STORM SEWERS, CLASS A, TYPE 1 EQUIVALENT ROUND-SIZE 36"		STORM SEWERS, CLASS B, TYPE 1 12"		STORM SEWERS, CLASS B, TYPE 1 15"		STORM SEWERS, CLASS B, TYPE 2 12"		STORM SEWERS, CLASS B, TYPE 2 15"		STORM SEWERS, CLASS B, TYPE 2 18"		STORM SEWERS, TYPE 2 WATER MAIN QUALITY PIPE, 15"		
					CU YD		FOOT		FOOT		FOOT		FOOT		FOOT		FOOT		FOOT		
					STR	ISBG	STR	ISBG	STR	ISBG	STR	ISBG	STR	ISBG	STR	ISBG	STR	ISBG	STR	ISBG	
P05	ES05	712.89	S06	712.60		6.4										10					0.029
P06	S06	712.50	END SECT.	711.62		6.4										48					0.018
P07	S07	707.75	END SECT.	707.25								67									0.007
P09	S09	713.30	S10	712.89		26.3														41	0.010
P10	S10	712.79	S12	711.50		90.1														130	0.010
P11	S11	711.87	S12	711.50		24.4														38	0.010
P12	S12	710.91	END SECT.	710.00		7.8														91	0.010
P13	S13	704.53	END SECT.	703.50	12.9												33	173			0.031
P14	S14	705.26	S13	705.07	35.0								38								0.005
P15	S15	705.53	S13	704.53	199.6												201				0.005
P16	S16	706.26	S15	706.07	26.3											38					0.005
P17	S17	706.00	S15	705.53	68.4												95				0.005
P18	S18	706.46	S17	706.27	14.7										38						0.005
P19	S19	706.70	S17	706.03	4.5				134												0.005
P19A	S19A	706.85	S19	706.73	3.9				21												0.006
P27	END SECT.	718.50	S28	716.77	5.4		101														0.017
P34	S34	706.51	S16	706.36	10.0						25										0.006
				TOTAL:	380.7	155.0	101	0	155	0	25	67	38	0	38	86	329	173	0	300	

LOCATION	EARTH EXCAVATION	CHANNEL EXCAVATION	EXCAVATION ADJUSTED FOR SHRINKAGE (25%)	EMBANKMENT (FILL)	EARTHWORK BALANCE WASTE (+) OR SHORTAGE (-)
COUNTY HIGHWAY 13	CU YD	CU YD	CU YD	CU YD	CU YD
STA. 205+65.00 - STA. 218+00.00 (STR)	1071.22		803.42	976.52	-173.11
STA. 218+00.00 - STA. 222+25.00 (ISBG)	90.92		68.19	688.52	-620.34
STA. 220+37.26 - STA. 221+32.72 (ISBG) DETENTION BASIN	122.85		92.14	8.69	83.44
STA. 222+25.00 - STA. 229+90.28 (STR)	1176.14		882.10	602.12	279.98
FRONT ST					
STA. 16+35.04 - 21+25.09 (ISBG)	1056.79		792.59	327.91	464.68
E MILL ST					
STA. 550+09.09 - 552+27.58 (STR)	118.46		88.84	1.53	87.31
W BRANCH OF PANTHER CREEK					
STA. 400+00.00 - 404+41.01 (ISBG)		2099.03	1574.27	534.27	1040.00
ISBG SUBTOTAL	1147.70	2099.03	860.78	1550.70	-689.92
STR SUBTOTAL	2365.82	0.00	1774.36	1580.18	194.19
TOTAL	3513.52	2099.03	2635.14	3130.88	-495.73

EARTHWORK SUMMARY			
20200100	EARTH EXCAVATION	3515	CU YD
20300100	CHANNEL EXCAVATION	2100	CU YD
20400800	FURNISHED EXCAVATION	495	CU YD

MODEL: Default
FILE NAME: $:\237\2016\2371601\2.22 \Woodford Co CH 13 at Front St Ph III\CADD\CADD Sheets\D416012-sht-Schedule.dgn

MAURER-STUTZ ENGINEERS SURVEYORS

USER NAME = jdspiller	DESIGNED - CLD	REVISED -
	DRAWN - CAD	REVISED -
PLOT SCALE = 0.1667 ' / in.	CHECKED - JDS	REVISED -
PLOT DATE = 11/12/2024	DATE - 10/18/2024	REVISED -

WOODFORD COUNTY HIGHWAY DEPARTMENT

COUNTY HIGHWAY 13 RECONSTRUCTION AT FRONT ST.
SCHEDULE OF QUANTITIES

SCALE: | SHEET 18 OF 18 SHEETS | STA. | TO STA.

F.A.S. RTE.	SECTION	COUNTY	TOTAL SHEETS	SHEET NO.
364	20-00091-03-BR	WOODFORD	114	32
		CONTRACT NO. 89854		

HORIZONTAL CONTROL POINTS - BASED OFF EXISTING ALIGNMENTS						
POINT #	NORTHING	EASTING	CHAIN	STATION	OFFSET	DESCRIPTION
1	1504519.3950	2565118.7830	RCLENCH13NA	225+92.46	96.7' LT	PK NAIL IN PAVEMENT
2	1504415.8890	2565563.7640	RCLEFRNTA	20+49.83	21.7' RT	PK NAIL IN PAVEMENT
3	1504884.8270	2565181.9210	RCLPCH13A	229+59.42	25.8' LT	PK NAIL IN PAVEMENT
4	1504247.2340	2565348.2780	RDEXCLSCH13	218+24.08	31.7' RT	LANDSCAPE NAIL IN SHOULDER
5	1503693.2710	2565243.6580	RDEXCLSCH13	212+61.03	14.9' LT	LANDSCAPE NAIL IN SHOULDER

BENCHMARKS		
DESIGNATION	ELEVATION	DESCRIPTION
TBM #401	718.06	END CAP BOLT ON FIRE HYDRANT LOCATED IN THE SOUTHEAST QUADRANT OF THE INTERSECTION OF COUNTY HIGHWAY 13 AND FRONT ST.
TBM #402	714.30	END CAP BOLT ON FIRE HYDRANT LOCATED IN THE NORTHWEST QUADRANT OF THE INTERSECTION OF COUNTY HIGHWAY 13 AND FRONT ST.

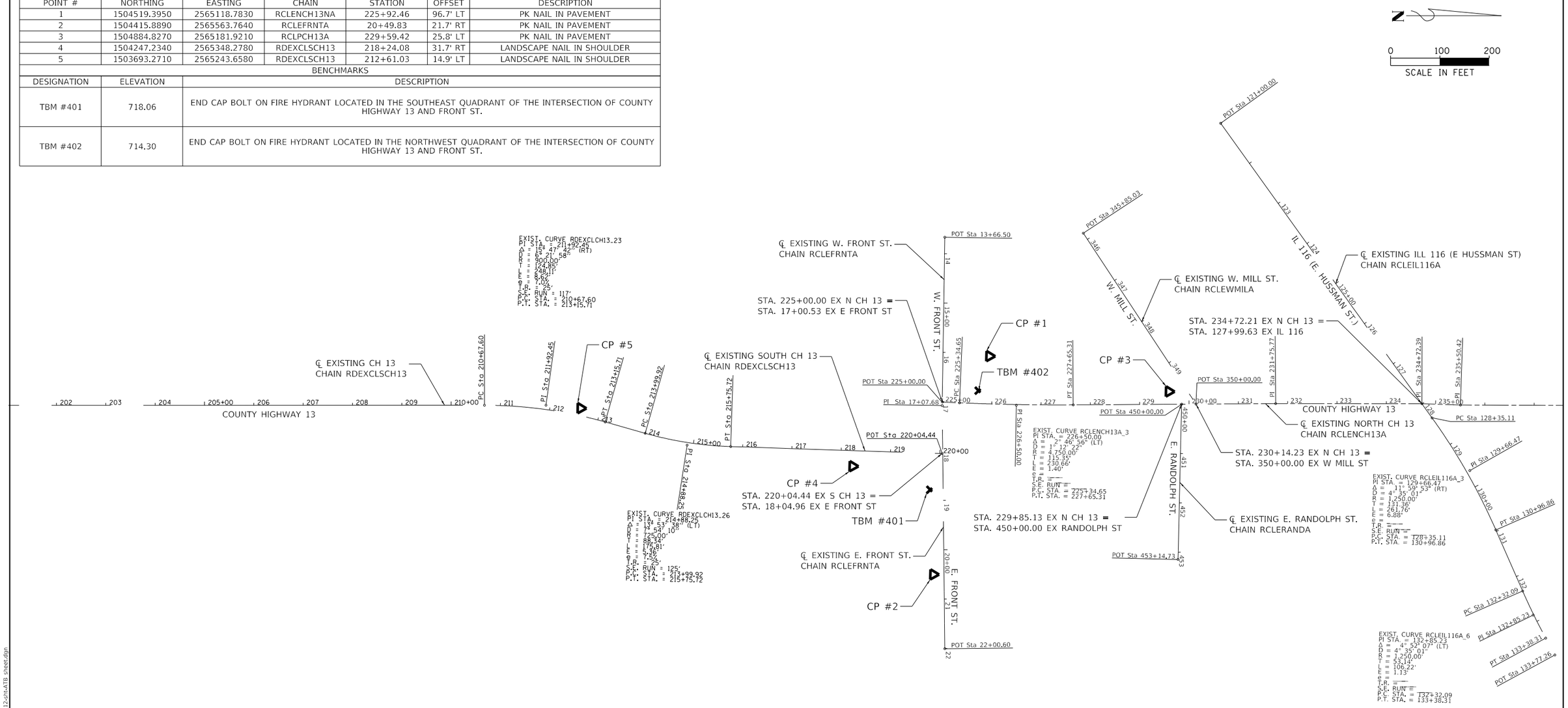

MODEL: Default
FILE NAME: S:\237\2016\23716012.22 Woodford Co CH 13 at Front St Ph III\CADD\CADD Sheets\0416012-sht-ATB sheet.dgn

MAURER-STUTZ ENGINEERS SURVEYORS	USER NAME = jdspiller	DESIGNED - CLD	REVISED -	WOODFORD COUNTY HIGHWAY DEPARTMENT
		DRAWN - CAD	REVISED -	
	PLOT SCALE = 200.0000 ' / in.	CHECKED - JDS	REVISED -	
	PLOT DATE = 11/12/2024	DATE - 10/18/2024	REVISED -	

COUNTY HIGHWAY 13 RECONSTRUCTION AT FRONT ST.
ALIGNMENT, TIES, AND BENCHMARKS

SCALE: 1" = 100' | SHEET 1 OF 4 SHEETS | STA. TO STA.

F.A.S. RTE.	SECTION	COUNTY	TOTAL SHEETS	SHEET NO.
364	20-00091-03-BR	WOODFORD	114	33
		CONTRACT NO. 89854		

HORIZONTAL CONTROL POINTS - BASED OFF PROPOSED ALIGNMENTS						
POINT #	NORTHING	EASTING	CHAIN	STATION	OFFSET	DESCRIPTION
1	1504519.3950	2565118.7830	RCLPCH13A	221+42.92	126.4' LT	PK NAIL IN PAVEMENT
2	1504415.8890	2565563.7640	RCLPFRNTA	20+47.69	20.9' RT	PK NAIL IN PAVEMENT
3	1504884.8270	2565181.9210	RCLPCH13A	224+77.30	25.8' LT	PK NAIL IN PAVEMENT
4	1504247.2340	2565348.2780	RCLPCH13A	218+24.96	32.2' RT	LANDSCAPE NAIL IN SHOULDER
5	1503693.2710	2565243.6580	RCLPCH13A	212+63.33	15.0' LT	LANDSCAPE NAIL IN SHOULDER
BENCHMARKS						
DESIGNATION	ELEVATION	DESCRIPTION				
TBM #401	718.06	END CAP BOLT ON FIRE HYDRANT LOCATED IN THE SOUTHEAST QUADRANT OF THE INTERSECTION OF COUNTY HIGHWAY 13 AND FRONT ST.				
TBM #402	714.30	END CAP BOLT ON FIRE HYDRANT LOCATED IN THE NORTHWEST QUADRANT OF THE INTERSECTION OF COUNTY HIGHWAY 13 AND FRONT ST.				

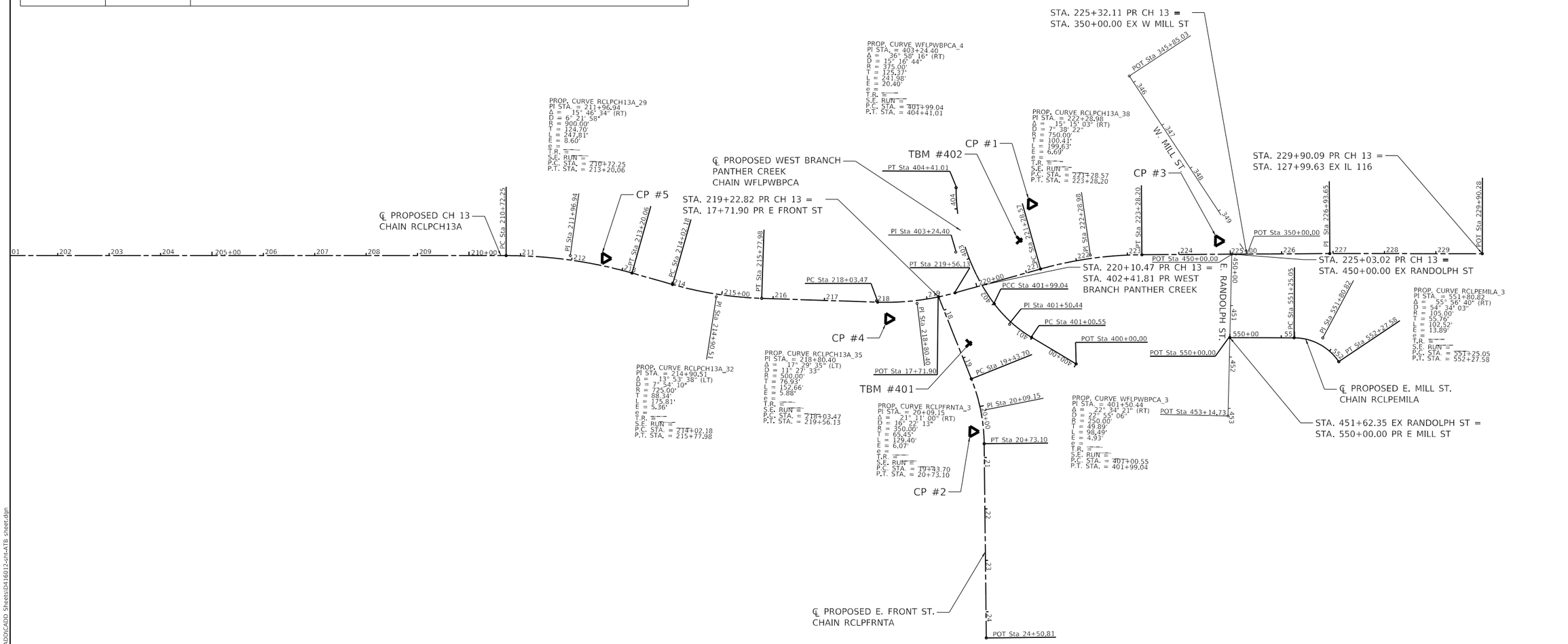

MODEL: Default
FILE NAME: S:\23\2016\2371601\2.22 (Woodford Co CH 13 at Front St Ph III)\CADD\CADD Sheets\D416012-sht-ATB sheet.dgn

MAURER-STUTZ ENGINEERS SURVEYORS	USER NAME = jdspiller	DESIGNED - CLD	REVISED -	WOODFORD COUNTY HIGHWAY DEPARTMENT	COUNTY HIGHWAY 13 RECONSTRUCTION AT FRONT ST. ALIGNMENT, TIES, AND BENCHMARKS	F.A.S. RTE.	SECTION	COUNTY	TOTAL SHEETS / SHEET NO.
		DRAWN - CAD	REVISED -			364	20-00091-03-BR	WOODFORD	114 / 34
	PLOT SCALE = 200.0000 ' / in.	CHECKED - JDS	REVISED -					CONTRACT NO. 89854	
	PLOT DATE = 11/12/2024	DATE - 10/18/2024	REVISED -		SCALE: 1" = 100' SHEET 2 OF 4 SHEETS STA. TO STA.				

EXISTING S CH13 ALIGNMENT - CHAIN RDEXCLSCH13

Point RDEXCLSCH1321 X 2,565,282.8790 Y 1,501,772.3650 Sta 193+41.4270
Course from RDEXCLSCH1321 to PC RDEXCLSCH13_23 358° 38' 48.8067" Dist 1,726.1721
Curve RDEXCLSCH13_23
P.I. Station 211+92.4452 X 2,565,239.1690 Y 1,503,622.8671
Delta = 15° 47' 42.4111" (RT)
Degree = 6° 21' 58.3118"
Tangent = 124.8462
Length = 248.1091
Radius = 900.0000
External = 8.6179
Long Chord = 247.3242
Mid. Ord. = 8.5362
P.C. Station 210+67.5990 X 2,565,242.1171 Y 1,503,498.0557
P.T. Station 213+15.7081 X 2,565,270.3057 Y 1,503,743.7683
C.C. X 2,566,141.8662 Y 1,503,519.3083
Back = 358° 38' 48.8067"
Ahead = 14° 26' 31.2177"
Chord Bear = 6° 32' 40.0122"
Course from PT RDEXCLSCH13_23 to PC RDEXCLSCH13_26 14° 26' 31.2176" Dist 84.2081
Curve RDEXCLSCH13_26
P.I. Station 214+88.2531 X 2,565,313.3384 Y 1,503,910.8609
Delta = 13° 53' 37.7197" (LT)
Degree = 7° 54' 10.3181"
Tangent = 88.3369
Length = 175.8072
Radius = 725.0000
External = 5.3618
Long Chord = 175.3768
Mid. Ord. = 5.3225
P.C. Station 213+99.9162 X 2,565,291.3071 Y 1,503,825.3154
P.T. Station 215+75.7234 X 2,565,314.1835 Y 1,503,999.1938
C.C. X 2,564,589.2167 Y 1,504,006.1303
Back = 14° 26' 31.2177"
Ahead = 0° 32' 53.4981"
Chord Bear = 7° 29' 42.3579"
Course from PT RDEXCLSCH13_26 to RDEXCLSCH1328 0° 32' 53.4981" Dist 428.7214
Point RDEXCLSCH1328 X 2,565,318.2854 Y 1,504,427.8956 Sta 220+04.4448

EXISTING E FRONT ST ALIGNMENT - CHAIN RCLEFRNTA

Point RCLEFRNTA1 X 2,564,879.9028 Y 1,504,423.3500 Sta 13+66.5018
Course from RCLEFRNTA1 to RCLEFRNTA3 89° 33' 11.2563" Dist 341.1806
Point RCLEFRNTA3 X 2,565,221.0730 Y 1,504,426.0110 Sta 17+07.6824
Course from RCLEFRNTA3 to RCLEFRNTA4 88° 03' 18.3424" Dist 492.9185
Point RCLEFRNTA4 X 2,565,713.7075 Y 1,504,442.7399 Sta 22+00.6009

EXISTING N CH13 ALIGNMENT - CHAIN RCLENCH13A

Point 56391 X 2,565,214.0584 Y 1,504,426.2871 Sta 225+00.0000
Course from 56391 to PC RCLENCH13A_3 1° 05' 17.8303" Dist 34.6453
Curve RCLENCH13A_3
P.I. Station 226+50.0000 X 2,565,216.9073 Y 1,504,576.2600
Delta = 2° 46' 56.3985" (LT)
Degree = 1° 12' 22.4170"
Tangent = 115.3547
Length = 230.6641
Radius = 4,750.0000
External = 1.4005
Long Chord = 230.6415
Mid. Ord. = 1.4001
P.C. Station 225+34.6453 X 2,565,214.7164 Y 1,504,460.9261
P.T. Station 227+65.3094 X 2,565,213.4971 Y 1,504,691.5643
C.C. X 2,560,465.5732 Y 1,504,551.1430
Back = 1° 05' 17.8304"
Ahead = 358° 18' 21.4319"
Chord Bear = 359° 41' 49.6311"
Course from PT RCLENCH13A_3 to 56392 358° 18' 21.4319" Dist 410.4591
Point 56392 X 2,565,201.3630 Y 1,505,101.8440 Sta 231+75.7685
Course from 56392 to 56393 358° 42' 39.4503" Dist 296.6262
Point 56393 X 2,565,194.6901 Y 1,505,398.3951 Sta 234+72.3947
Course from 56393 to 56394 0° 36' 44.5434" Dist 78.0262
Point 56394 X 2,565,195.5240 Y 1,505,476.4168 Sta 235+50.4208
Course from 56394 to 56395 358° 51' 30.4276" Dist 518.0421
Point 56395 X 2,565,185.2033 Y 1,505,994.3561 Sta 240+68.4629

EXISTING E RANDOLPH ST ALIGNMENT - CHAIN RCLERANDA

Point RCLERANDA1 X 2,565,206.9987 Y 1,504,911.2915 Sta 450+00.0000
Course from RCLERANDA1 to RCLERANDA2 90° 00' 00.0000" Dist 314.7335
Point RCLERANDA2 X 2,565,521.7322 Y 1,504,911.2915 Sta 453+14.7335

EXISTING W MILL ST ALIGNMENT - CHAIN RCLEWMILA

Point RCLEWMILA1 X 2,564,865.1138 Y 1,504,703.9445 Sta 345+85.0328
Course from RCLEWMILA1 to RCLEWMILA2 55° 15' 59.4539" Dist 414.9672
Point RCLEWMILA2 X 2,565,206.1385 Y 1,504,940.3762 Sta 350+00.0000

EXISTING ILL 116 (E HUSSMANN ST) ALIGNMENT - CHAIN RCLEIL116A

Point 55109 X 2,564,636.0011 Y 1,504,977.0764 Sta 121+00.0000
Course from 55109 to PC RCLEIL116A_3 52° 59' 30.7416" Dist 735.1068
Curve RCLEIL116A_3
P.I. Station 129+66.4657 X 2,565,327.9174 Y 1,505,498.6266
Delta = 11° 59' 53.0246" (RT)
Degree = 4° 35' 01.1845"
Tangent = 131.3589
Length = 261.7571
Radius = 1,250.0000
External = 6.8831
Long Chord = 261.2791
Mid. Ord. = 6.8454
P.C. Station 128+35.1068 X 2,565,223.0207 Y 1,505,419.5580
P.T. Station 130+96.8639 X 2,565,446.9593 Y 1,505,554.1622
C.C. X 2,565,975.4311 Y 1,504,421.3703
Back = 52° 59' 30.7416"
Ahead = 64° 59' 23.7662"
Chord Bear = 58° 59' 27.2539"
Course from PT RCLEIL116A_3 to PC RCLEIL116A_6 64° 59' 23.7662" Dist 135.2306
Curve RCLEIL116A_6
P.I. Station 132+85.2342 X 2,565,617.6667 Y 1,505,633.8009
Delta = 4° 52' 06.7765" (LT)
Degree = 4° 35' 01.1845"
Tangent = 53.1396
Length = 106.2153
Radius = 1,250.0000
External = 1.1290
Long Chord = 106.1833
Mid. Ord. = 1.1280
P.C. Station 132+32.0945 X 2,565,569.5098 Y 1,505,611.3347
P.T. Station 133+38.3098 X 2,565,663.7431 Y 1,505,660.2732
C.C. X 2,565,041.0380 Y 1,506,744.1266
Back = 64° 59' 23.7662"
Ahead = 60° 07' 16.9896"
Chord Bear = 62° 33' 20.3779"
Course from PT RCLEIL116A_6 to 55110 60° 07' 16.9898" Dist 38.9505
Point 55110 X 2,565,697.5165 Y 1,505,679.6769 Sta 133+77.2604

PROPOSED CH 13 ALIGNMENT - CHAIN RCLPCH13A

Course from 56769 to 56770 358° 42' 42.3881" Dist 2,666.0578
Point 56770 X 2,565,282.8790 Y 1,501,772.3650 Sta 193+43.7651
Course from 56770 to PC RCLPCH13A_29 358° 39' 56.7602" Dist 1,728.4815
Curve RCLPCH13A_29
P.I. Station 211+96.9417 X 2,565,239.7284 Y 1,503,625.0392
Delta = 15° 46' 34.4576" (RT)
Degree = 6° 21' 58.3118"
Tangent = 124.6951
Length = 247.8126
Radius = 900.0000
External = 8.5972
Long Chord = 247.0305
Mid. Ord. = 8.5159
P.C. Station 210+72.2466 X 2,565,242.6319 Y 1,503,500.3779
P.T. Station 213+20.0592 X 2,565,270.8274 Y 1,503,745.7940
C.C. X 2,566,142.3879 Y 1,503,521.3341
Back = 358° 39' 56.7602"
Ahead = 14° 26' 31.2177"
Chord Bear = 6° 33' 13.9890"
Course from PT RCLPCH13A_29 to PC RCLPCH13A_32 14° 26' 31.2177" Dist 82.1162
Curve RCLPCH13A_32
P.I. Station 214+90.5123 X 2,565,313.3384 Y 1,503,910.8609
Delta = 13° 53' 37.7197" (LT)
Degree = 7° 54' 10.3181"
Tangent = 88.3369
Length = 175.8072
Radius = 725.0000
External = 5.3618
Long Chord = 175.3768
Mid. Ord. = 5.3225
P.C. Station 214+02.1754 X 2,565,291.3071 Y 1,503,825.3154
P.T. Station 215+77.9826 X 2,565,314.1835 Y 1,503,999.1938
C.C. X 2,564,589.2167 Y 1,504,006.1303
Back = 14° 26' 31.2177"
Ahead = 0° 32' 53.4981"
Chord Bear = 7° 29' 42.3579"
Course from PT RCLPCH13A_32 to PC RCLPCH13A_35 0° 32' 53.4981" Dist 225.4907
Curve RCLPCH13A_35
P.I. Station 218+80.3998 X 2,565,317.0770 Y 1,504,301.5972
Delta = 17° 29' 35.1556" (LT)
Degree = 11° 27' 32.9612"
Tangent = 76.9265
Length = 152.6561
Radius = 500.0000
External = 5.8831
Long Chord = 152.0639
Mid. Ord. = 5.8147
P.C. Station 218+03.4733 X 2,565,316.3410 Y 1,504,224.6742
P.T. Station 219+56.1294 X 2,565,294.6566 Y 1,504,375.1840
C.C. X 2,564,816.3638 Y 1,504,229.4580
Back = 0° 32' 53.4981"
Ahead = 343° 03' 18.3424"
Chord Bear = 351° 48' 05.9202"
Course from PT RCLPCH13A_35 to PC RCLPCH13A_38 343° 03' 18.3425" Dist 172.4359
Curve RCLPCH13A_38
P.I. Station 222+28.9755 X 2,565,215.1350 Y 1,504,636.1846
Delta = 15° 15' 03.0894" (RT)
Degree = 7° 38' 21.9742"
Tangent = 100.4102
Length = 199.6333
Radius = 750.0000
External = 6.6916
Long Chord = 199.0444
Mid. Ord. = 6.6324
P.C. Station 221+28.5653 X 2,565,244.3998 Y 1,504,540.1337
P.T. Station 223+28.1986 X 2,565,212.1667 Y 1,504,736.5509
C.C. X 2,565,961.8389 Y 1,504,758.7227
Back = 343° 03' 18.3424"
Ahead = 358° 18' 21.4319"
Chord Bear = 350° 40' 49.8871"
Course from PT RCLPCH13A_38 to 56771 358° 18' 21.4319" Dist 365.4528
Point 56771 X 2,565,201.3630 Y 1,505,101.8440 Sta 226+93.6514
Course from 56771 to 56772 358° 42' 39.4503" Dist 296.6262
Point 56772 X 2,565,194.6901 Y 1,505,398.3951 Sta 229+90.2776

PROPOSED E MILL STREET ALIGNMENT - CHAIN RCLPEMILA

Point RCLPEMILA1 X 2,565,369.3536 Y 1,504,911.2915 Sta 550+00.0000
Course from RCLPEMILA1 to PC RCLPEMILA_3 358° 50' 58.1044" Dist 125.0521
Curve RCLPEMILA_3
P.I. Station 551+80.8162 X 2,565,365.7229 Y 1,505,092.0712
Delta = 55° 56' 39.6363" (RT)
Degree = 54° 34' 02.6726"
Tangent = 55.7641
Length = 102.5234
Radius = 105.0000
External = 13.8892
Long Chord = 98.4990
Mid. Ord. = 12.2666
P.C. Station 551+25.0521 X 2,565,366.8426 Y 1,505,036.3183
P.T. Station 552+27.5754 X 2,565,411.2868 Y 1,505,124.2203
C.C. X 2,565,471.8215 Y 1,505,038.4266
Back = 358° 50' 58.1044"
Ahead = 54° 47' 37.7407"
Chord Bear = 26° 49' 17.9225"

PROPOSED E FRONT ST ALIGNMENT - CHAIN RCLPFRNTA

Point RCLPFRNTA1 X 2,565,303.2959 Y 1,504,343.0236 Sta 17+71.9040
Course from RCLPFRNTA1 to PC RCLPFRNTA_3 66° 52' 18.3561" Dist 171.7993
Curve RCLPFRNTA_3
P.I. Station 20+09.1513 X 2,565,521.4752 Y 1,504,436.2121
Delta = 21° 10' 59.9862" (RT)
Degree = 16° 22' 12.8018"
Tangent = 65.4480
Length = 129.4016
Radius = 350.0000
External = 6.0666
Long Chord = 128.6658
Mid. Ord. = 5.9633
P.C. Station 19+43.7033 X 2,565,461.2874 Y 1,504,410.5047
P.T. Station 20+73.1049 X 2,565,586.8855 Y 1,504,438.4333
C.C. X 2,565,598.7640 Y 1,504,088.6349
Back = 66° 52' 18.3562"
Ahead = 88° 03' 18.3424"
Chord Bear = 77° 27' 48.3493"
Course from PT RCLPFRNTA_3 to RCLPFRNTA5 88° 03' 18.3425" Dist 377.7051
Point RCLPFRNTA5 X 2,565,964.3731 Y 1,504,451.2520 Sta 24+50.8100

PROPOSED WEST BRANCH PANTHER CREEK ALIGNMENT - CHAIN WFLPWBPCA

Point WFLPWBPCA1 X 2,565,427.3989 Y 1,504,613.4731 Sta 400+00.0000
Course from WFLPWBPCA1 to PC WFLPWBPCA_3 209° 24' 39.8824" Dist 100.5451
Curve WFLPWBPCA_3
P.I. Station 401+50.4379 X 2,565,353.5231 Y 1,504,482.4239
Delta = 22° 34' 21.3859" (RT)
Degree = 22° 55' 05.9225"
Tangent = 49.8928
Length = 98.4916
Radius = 250.0000
External = 4.9300
Long Chord = 97.8559
Mid. Ord. = 4.8346
P.C. Station 401+00.5451 X 2,565,378.0240 Y 1,504,525.8864
P.T. Station 401+99.0366 X 2,565,314.2158 Y 1,504,451.6956
C.C. X 2,565,160.2443 Y 1,504,648.6545
Back = 209° 24' 39.8824"
Ahead = 231° 59' 01.2683"
Chord Bear = 220° 41' 50.5754"
Curve WFLPWBPCA_4
P.I. Station 403+24.4048 X 2,565,215.4463 Y 1,504,374.4832
Delta = 36° 58' 15.9798" (RT)
Degree = 15° 16' 43.9483"
Tangent = 125.3681
Length = 241.9753
Radius = 375.0000
External = 20.4013
Long Chord = 237.7991
Mid. Ord. = 19.3486
P.C. Station 401+99.0366 X 2,565,314.2158 Y 1,504,451.6956
P.T. Station 404+41.0120 X 2,565,090.0991 Y 1,504,372.1963
C.C. X 2,565,083.2586 Y 1,504,747.1339
Back = 231° 59' 01.2683"
Ahead = 268° 57' 17.2482"
Chord Bear = 250° 28' 09.2582"

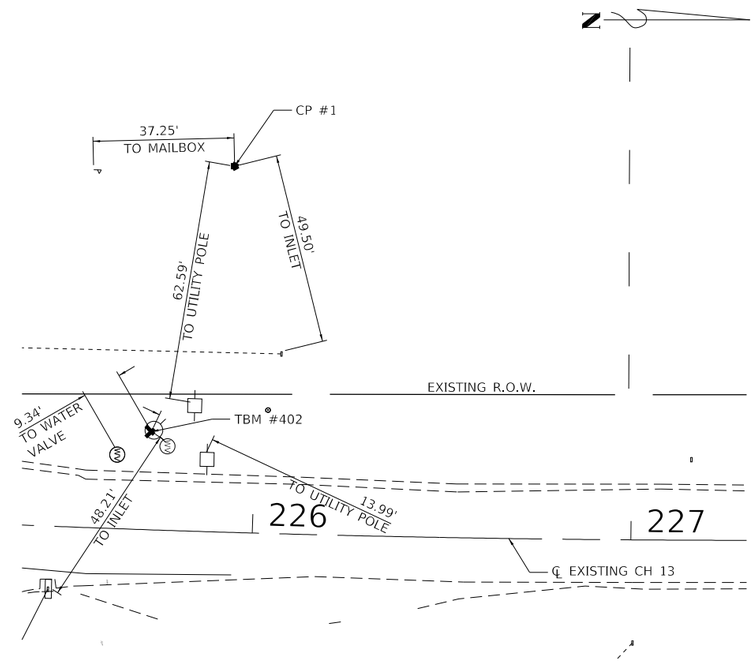

CP #1 AND TBM #402
NOT TO SCALE

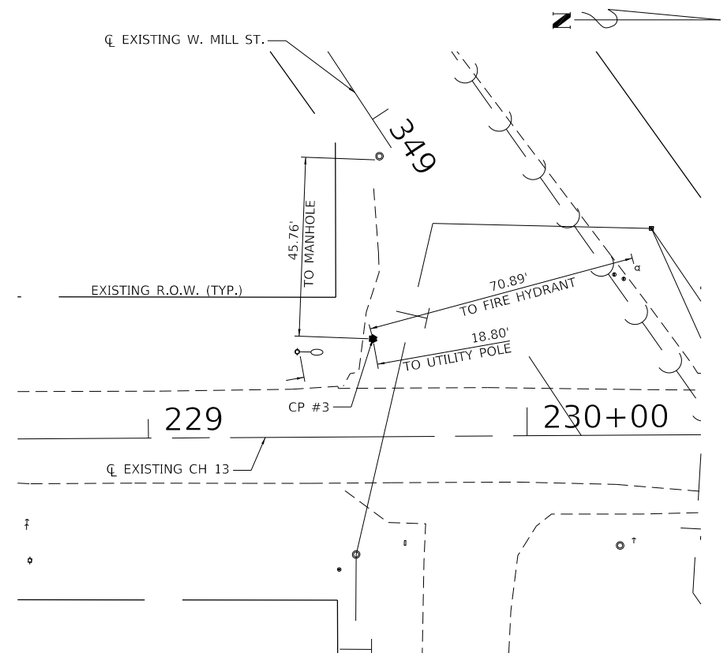

CP #3
NOT TO SCALE

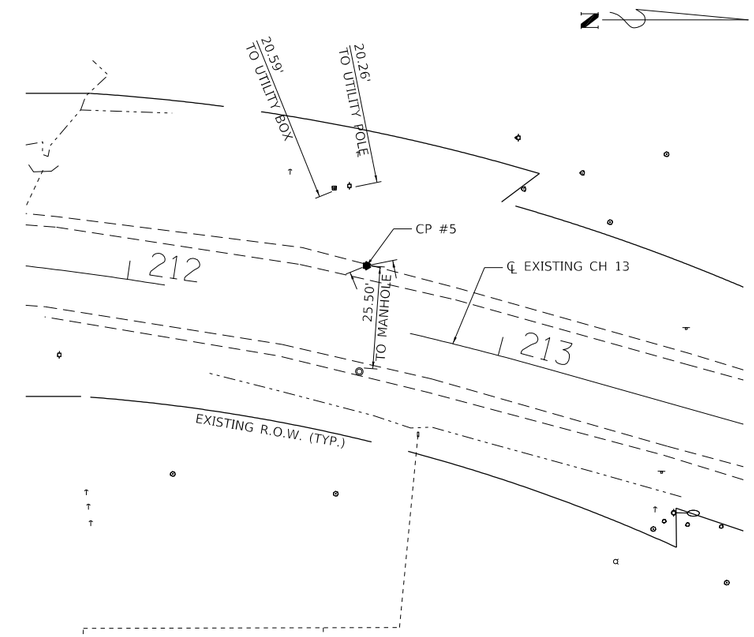

CP #5
NOT TO SCALE

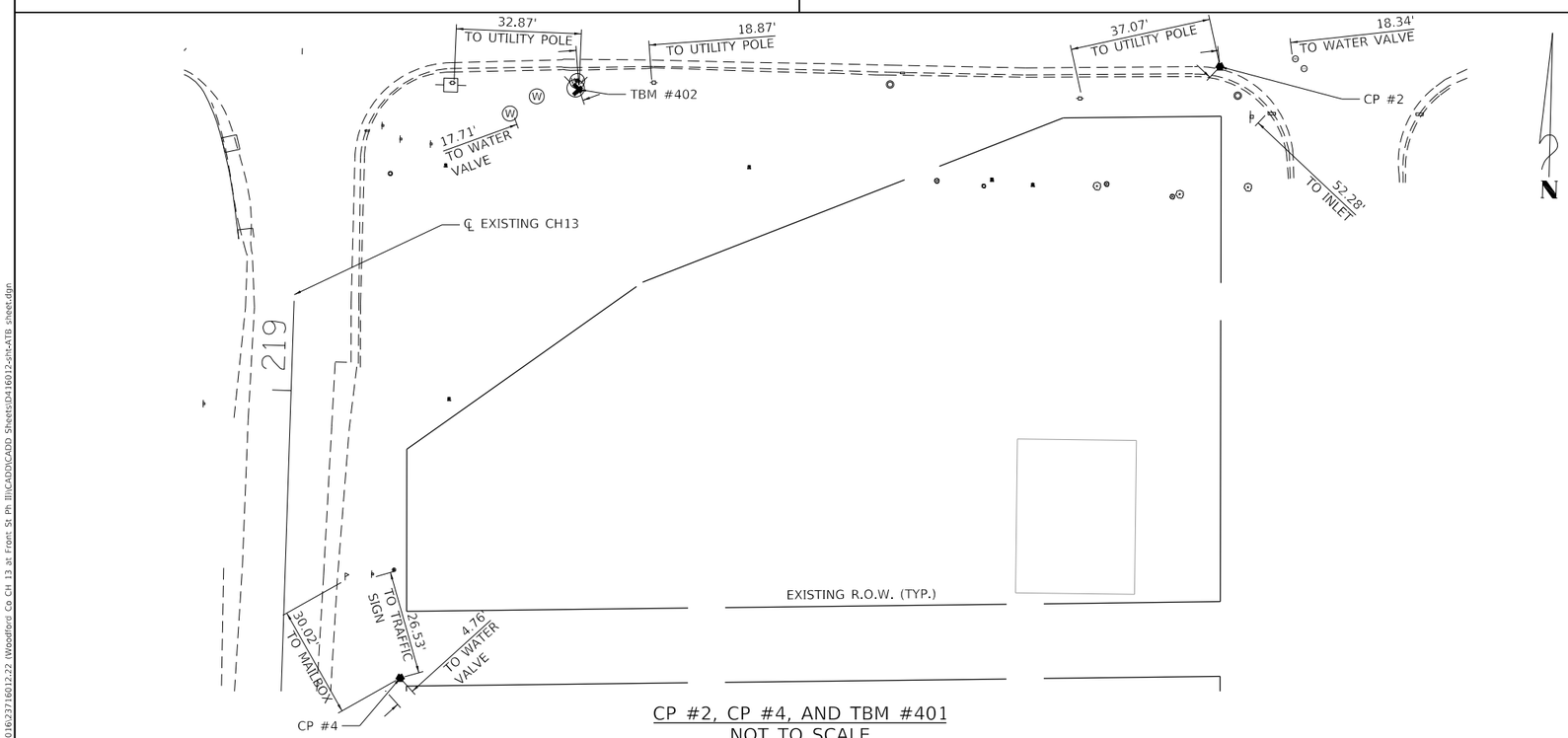

CP #2, CP #4, AND TBM #401
NOT TO SCALE

MODEL: Default
FILE NAME: S:\37\2016\23716012-22 Woodford Co CH 13 at Front St Ph III\CADD\CADD Sheets\D416012-sh-ATB sheet.dgn

MAURER-STUTZ
ENGINEERS SURVEYORS

USER NAME = jdspiller	DESIGNED - CLD	REVISED -	
	DRAWN - CAD	REVISED -	
PLOT SCALE = 200.0000 ' / in.	CHECKED - JDS	REVISED -	
PLOT DATE = 11/12/2024	DATE - 10/18/2024	REVISED -	

WOODFORD COUNTY
HIGHWAY DEPARTMENT

COUNTY HIGHWAY 13 RECONSTRUCTION AT FRONT ST.
ALIGNMENTS, TIES, AND BENCHMARKS

SCALE: 1" = 100' | SHEET 4 OF 4 SHEETS | STA. TO STA.

F.A.S. RTE.	SECTION	COUNTY	TOTAL SHEETS	SHEET NO.
364	20-00091-03-BR	WOODFORD	114	36
		CONTRACT NO. 89854		

LEGEND

- PAVEMENT REMOVAL
- HOT-MIX ASPHALT SURFACE REMOVAL, VARIABLE DEPTH
- DRIVEWAY PAVEMENT REMOVAL
- SIDEWALK REMOVAL
- COMBINATION CURB AND GUTTER REMOVAL
- SHRUB REMOVAL
- TREE REMOVAL (6 TO 15 UNITS DIAMETER)
  TREE REMOVAL (OVER 15 UNITS DIAMETER)
- FENCE REMOVAL
- GUARDRAIL REMOVAL

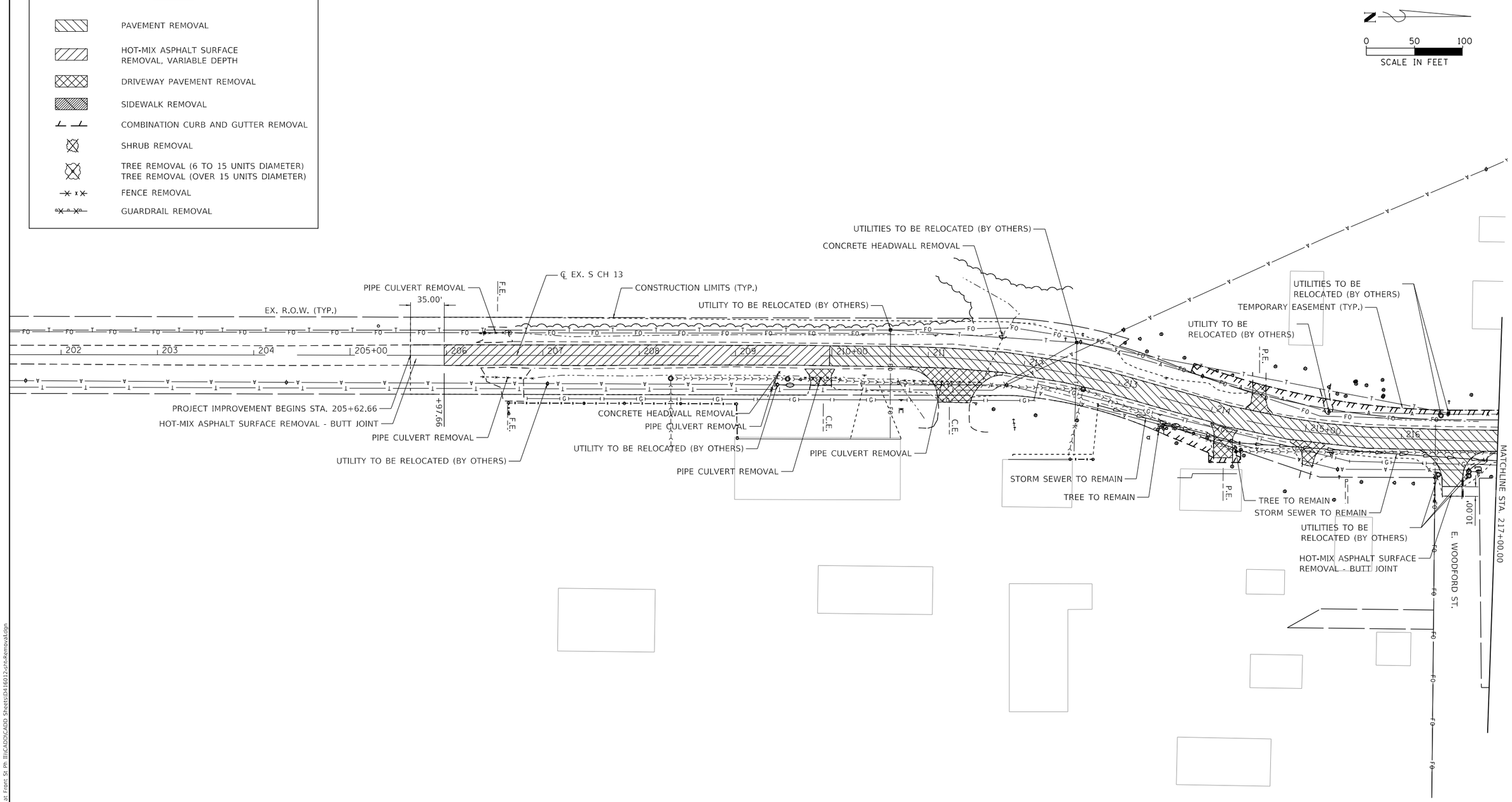

MODEL: Default
FILE NAME: S:\037\2016\3716012.22 \Woodford Co CH 13 at Front St Ph III\CADD\CADD Sheets\041601 2-sht-Removal.dgn

MAURER-STUTZ ENGINEERS SURVEYORS	USER NAME = jdspiller	DESIGNED - CLD	REVISED -	WOODFORD COUNTY HIGHWAY DEPARTMENT	COUNTY HIGHWAY 13 RECONSTRUCTION AT FRONT ST. REMOVAL PLAN
		DRAWN - CAD	REVISED -		
	PLOT SCALE = 100.0000 ' / in.	CHECKED - JDS	REVISED -		
	PLOT DATE = 11/12/2024	DATE - 10/18/2024	REVISED -		SCALE: 1" = 50' SHEET 1 OF 2 SHEETS STA. 205+65.00 TO STA. 216+97.74

F.A.S. RTE.	SECTION	COUNTY	TOTAL SHEETS	SHEET NO.
364	20-00091-03-BR	WOODFORD	114	37
		CONTRACT NO. 89854		

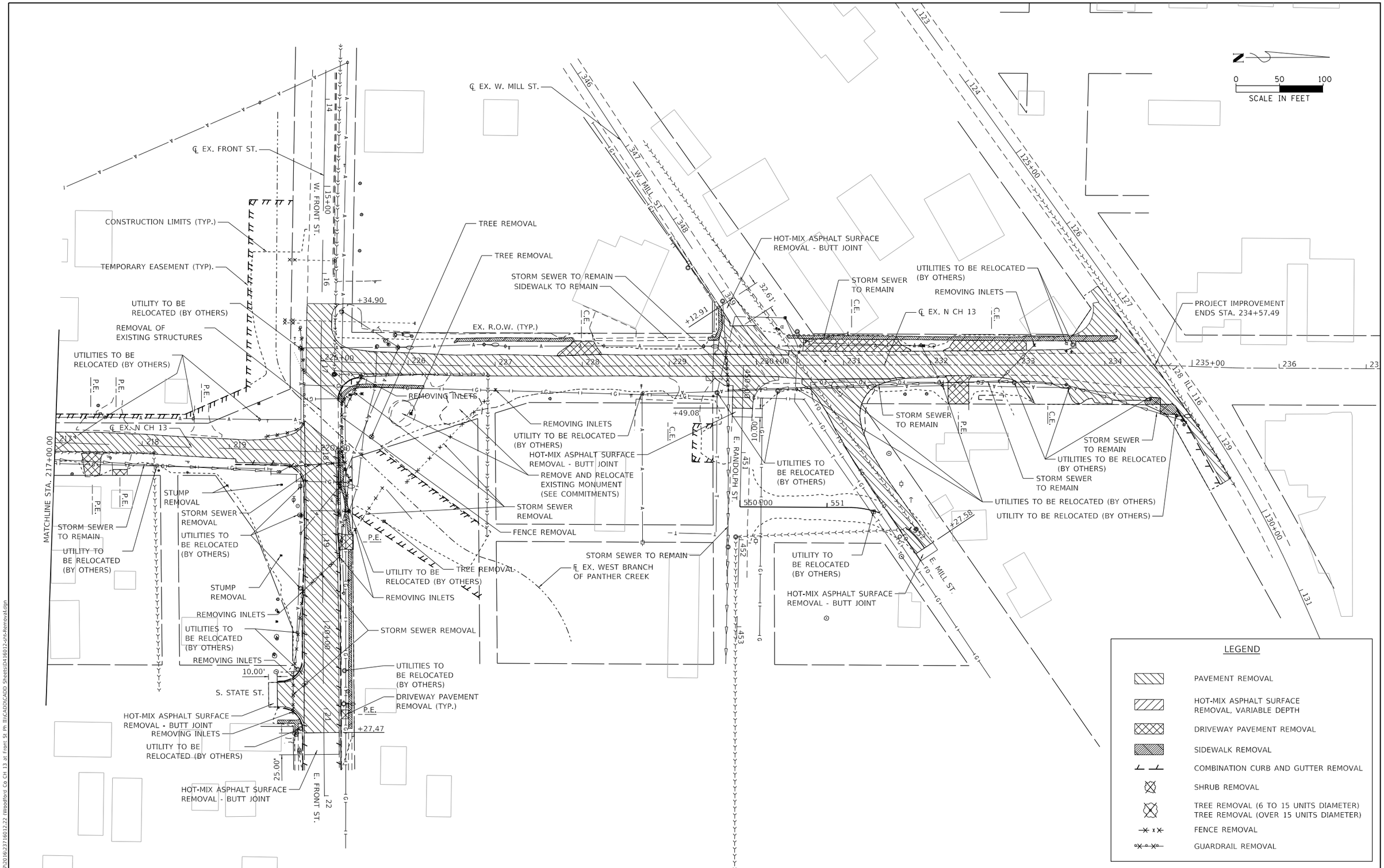

MODEL: Default
FILE NAME: S:\237\2016\2371602\22 IWoodford Co CH 13 at Front St Ph IIIICADD\CADD Sheets\0416012-sht-Removal.dgn

MAURER-STUTZ
ENGINEERS SURVEYORS

USER NAME = jdspiller	DESIGNED - CLD	REVISED -	
	DRAWN - CAD	REVISED -	
PLOT SCALE = 100.0000 ' / in.	CHECKED - JDS	REVISED -	
PLOT DATE = 11/12/2024	DATE - 10/18/2024	REVISED -	

WOODFORD COUNTY HIGHWAY DEPARTMENT

COUNTY HIGHWAY 13 RECONSTRUCTION AT FRONT ST.
REMOVAL PLAN

SCALE: 1" = 50' | SHEET 2 OF 2 SHEETS | STA. 216+97.74 TO STA. 237+16.38

F.A.S. RTE.	SECTION	COUNTY	TOTAL SHEETS	SHEET NO.
364	20-00091-03-BR	WOODFORD	114	38
		CONTRACT NO. 89854		

TYPICAL PAVEMENT MARKING LEGEND

- (2) 4" SOLID (WHITE)
- (3) 2-6" CROSSWALK @ 6'-6" MIN C.-C. (WHITE)
- (6) 12" DIAGONAL (WHITE)
- (7) 24" STOP BAR (WHITE)
- (11) 4" DOUBLE SOLID (YELLOW)

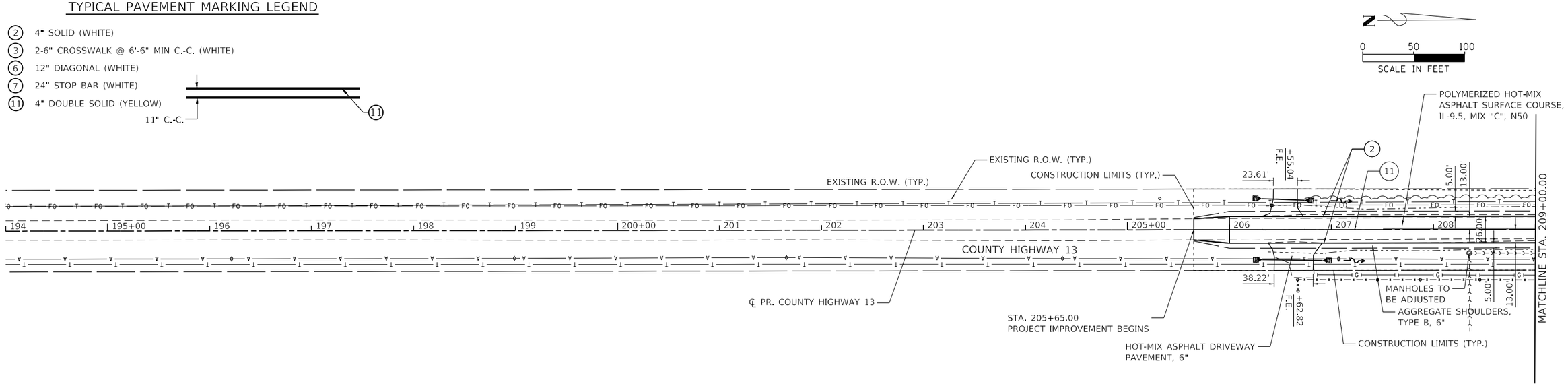

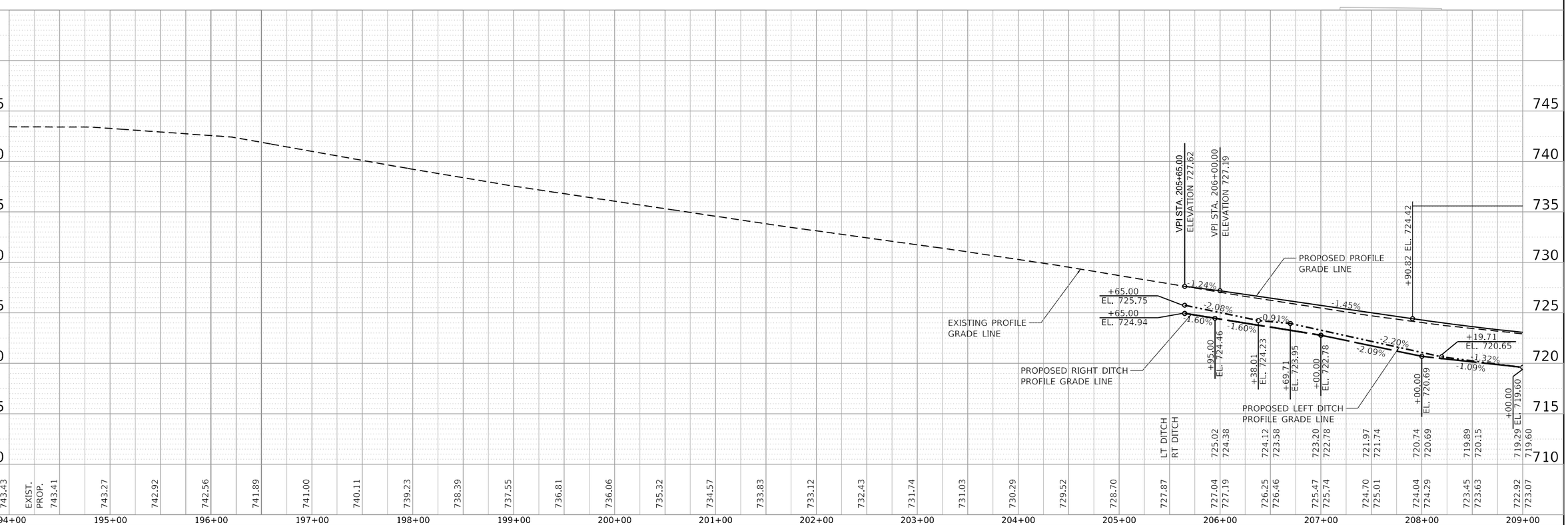

MAURER-STUTZ ENGINEERS SURVEYORS	USER NAME = jdspiller	DESIGNED - CLD	REVISED -
		DRAWN - CAD	REVISED -
	PLOT SCALE = 100.0000 ' / in.	CHECKED - JDS	REVISED -
	PLOT DATE = 11/12/2024	DATE - 10/18/2024	REVISED -

WOODFORD COUNTY HIGHWAY DEPARTMENT

COUNTY HIGHWAY 13 RECONSTRUCTION AT FRONT ST.
PLAN AND PROFILE – COUNTY HIGHWAY 13

SCALE: 1" = 50' | SHEET 1 OF 3 SHEETS | STA. 205+65.00 TO STA. 209+00.00

F.A.S. RTE.	SECTION	COUNTY	TOTAL SHEETS	SHEET NO.
364	20-00091-03 BR	WOODFORD	114	39
		CONTRACT NO. 89854		

PLAN — SURVEYED / PLOTTED / ALIGNMENT CHECKED / RT. OF WAY CHECKED / CADD FILE NAME — NOTE BOOK NO. — BY — DATE

PROFILE — SURVEYED / PLOTTED / GRADES CHECKED / B.M. NOTED / STRUCTURE NOTATIONS CHKD — NOTE BOOK NO. — BY — DATE

MODEL: Default
FILE NAME: S:\2370\2016\2371601\2.2 (Woodford Co CH 13 at Front St Ph III)\CADD\CADD Sheets\D416012-sht-planprof01.dgn

TYPICAL PAVEMENT MARKING LEGEND

- (2) 4" SOLID (WHITE)
- (3) 2-6" CROSSWALK @ 6'-6" MIN C.-C. (WHITE)
- (6) 12" DIAGONAL (WHITE)
- (7) 24" STOP BAR (WHITE)
- (11) 4" DOUBLE SOLID (YELLOW)

11" C.-C.

NOTE:
1. SEE INTERSECTION DETAIL FOR MORE INFORMATION.
2. SEE DRAINAGE SHEETS FOR DRAINAGE INFORMATION.

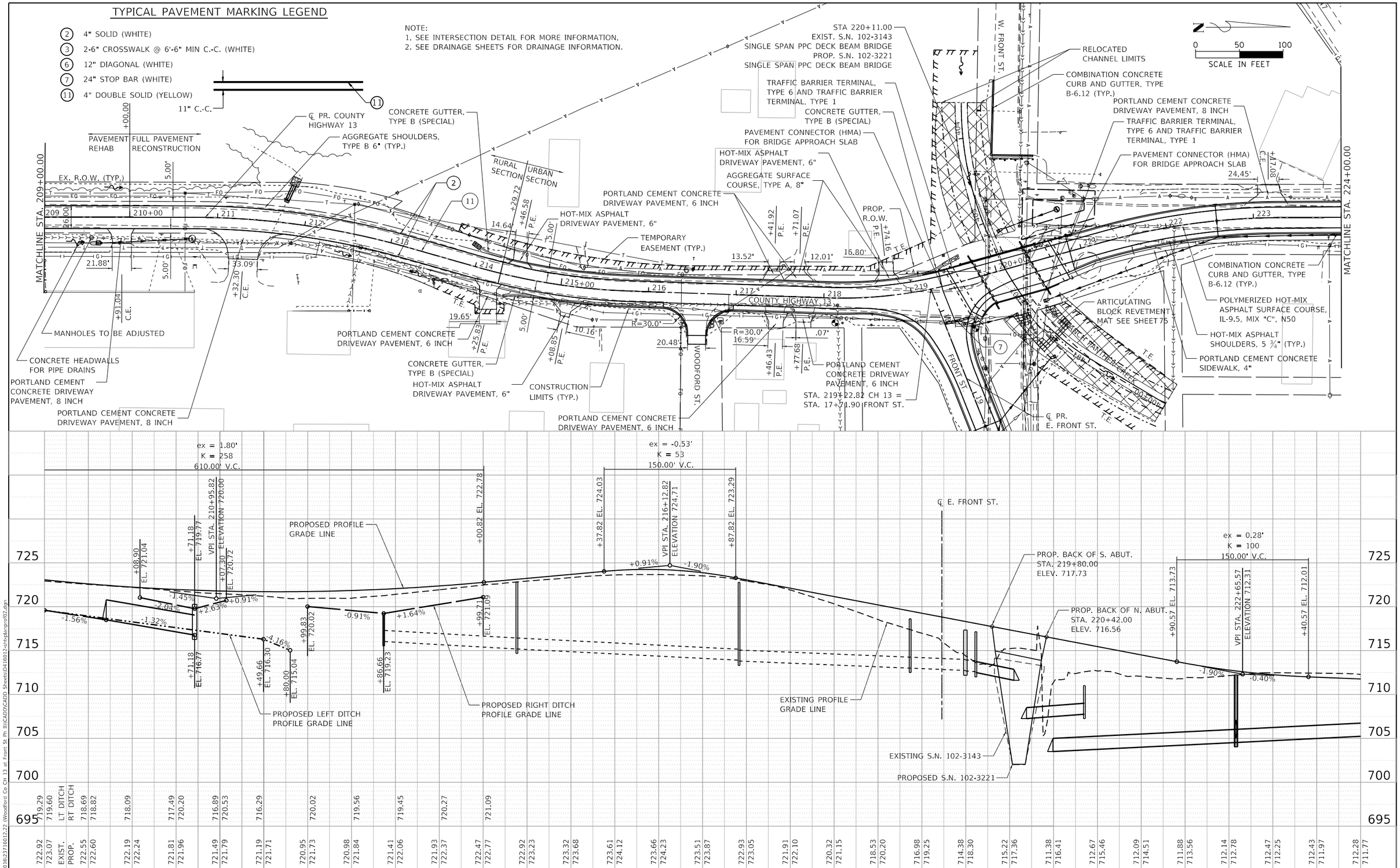

PLAN: SURVEYED / PLOTTED / ALIGNMENT CHECKED / RT. OF WAY CHECKED / CADD FILE NAME / NOTE BOOK NO. / BY / DATE

PROFILE: SURVEYED / PLOTTED / GRADES CHECKED / B.M. NOTED / STRUCTURE NOTATNS CHKD / NOTE BOOK NO. / BY / DATE

MODEL: Default
FILE NAME: S:\237\2016\23716012.22 (Woodford Co CH 13 at Front St Ph III\CADD\CADD Sheets\D416012-sht-planprof02.dgn

MAURER-STUTZ ENGINEERS SURVEYORS	USER NAME = jdspiller	DESIGNED - CLD	REVISED -
		DRAWN - CAD	REVISED -
	PLOT SCALE = 100.0000 ' / in.	CHECKED - JDS	REVISED -
	PLOT DATE = 11/12/2024	DATE - 10/18/2024	REVISED -

WOODFORD COUNTY HIGHWAY DEPARTMENT

COUNTY HIGHWAY 13 RECONSTRUCTION AT FRONT ST.
PLAN AND PROFILE – COUNTY HIGHWAY 13

SCALE: | SHEET 2 OF 3 SHEETS | STA. 209+00.00 TO STA. 224+00.00

F.A.S. RTE.	SECTION	COUNTY	TOTAL SHEETS	SHEET NO.
364	20-00091-03 BR	WOODFORD	114	40
		CONTRACT NO. 89854		

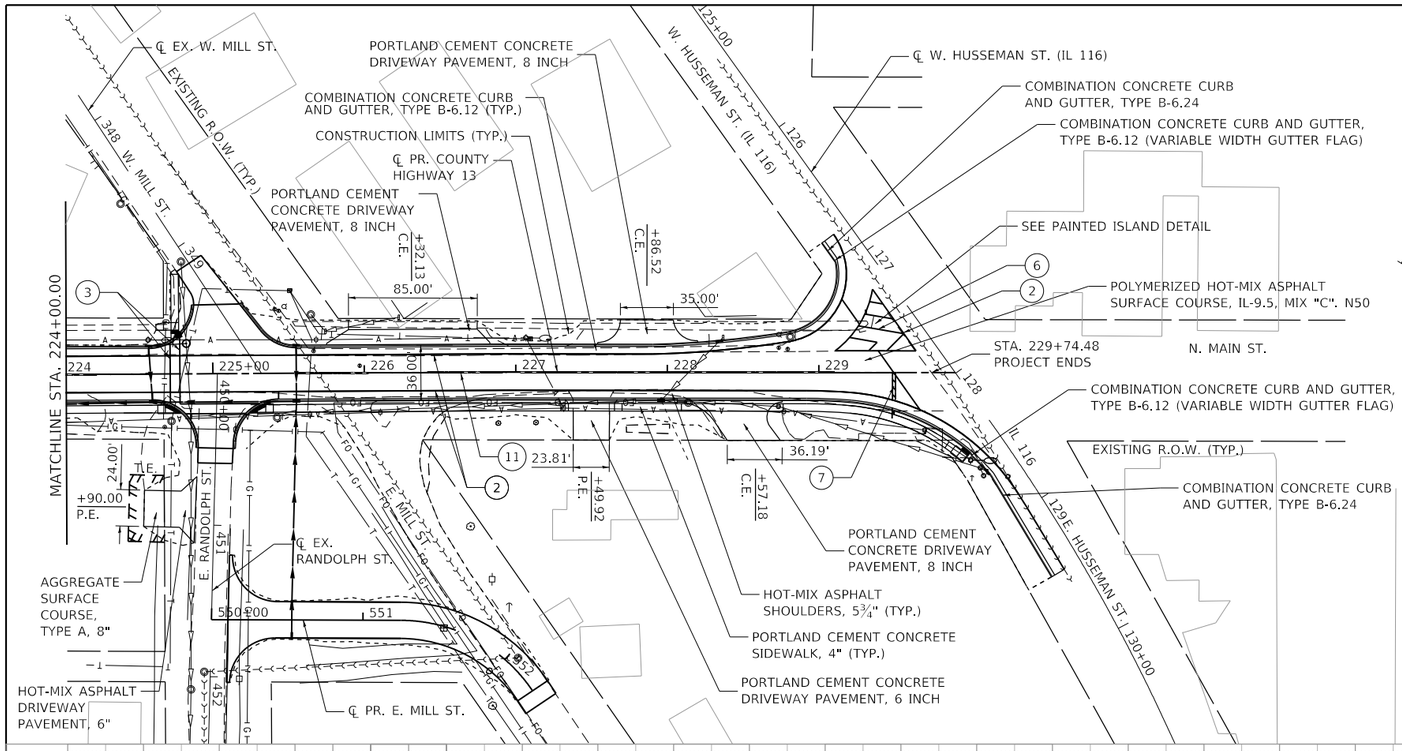

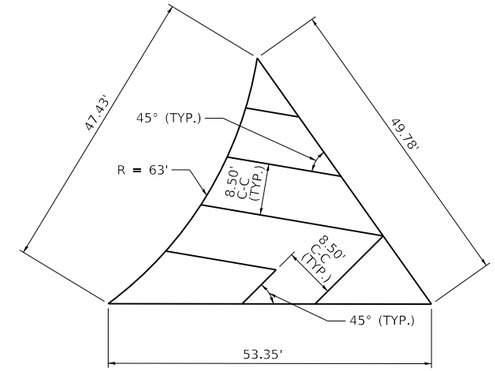

PAINTED ISLAND DETAIL
NOT TO SCALE

0 50 100
SCALE IN FEET

TYPICAL PAVEMENT MARKING LEGEND

- (2) 4" SOLID (WHITE)
- (3) 2-6" CROSSWALK @ 6'-6" MIN C.-C. (WHITE)
- (6) 12" DIAGONAL (WHITE)
- (7) 24" STOP BAR (WHITE)
- (11) 4" DOUBLE SOLID (YELLOW)

11" C.-C.

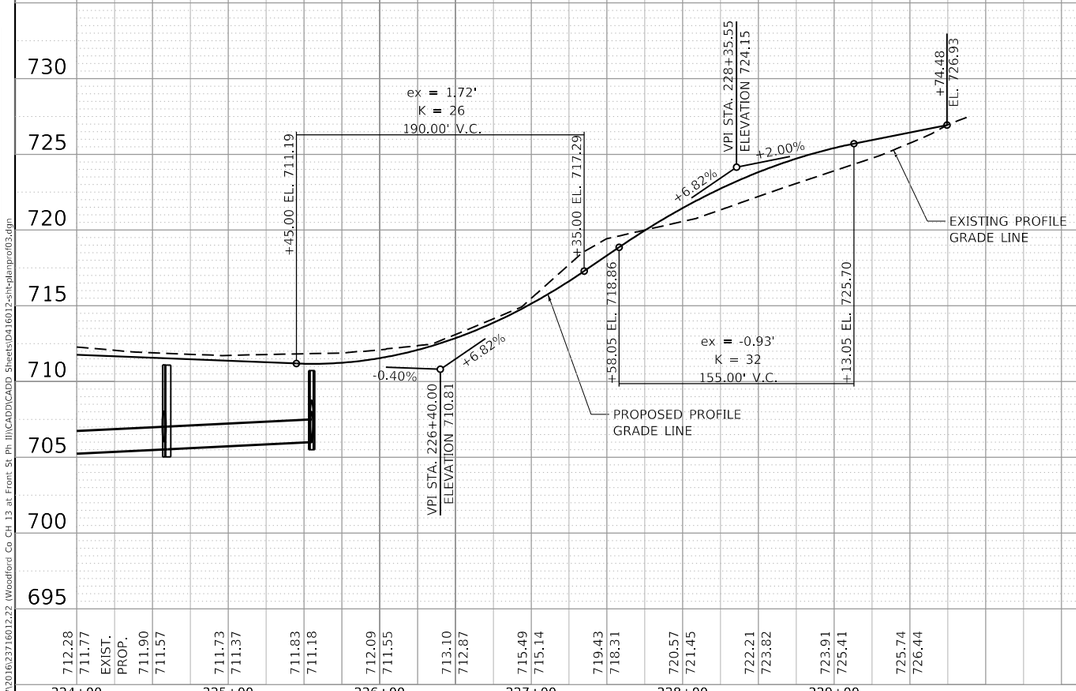

PLAN	BY	DATE
SURVEYED		
PLOTTED		
ALIGNMENT CHECKED		
RT. OF WAY CHECKED		
CADD FILE NAME		
NOTE BOOK NO.		

PROFILE	BY	DATE
SURVEYED		
PLOTTED		
GRADES CHECKED		
B.M. NOTED		
STRUCTURE NOTATNS CHKD		
NOTE BOOK NO.		

MODEL: Default
FILE NAME: $s(37)016\23716012.22 (Woodford Co CH 13 at Front St Ph III\CADD\CADD Sheets\D416012-sht-planprof03.dgn

MAURER-STUTZ ENGINEERS SURVEYORS

USER NAME = jdspiller	DESIGNED - CLD	REVISED -	
	DRAWN - CAD	REVISED -	
PLOT SCALE = 100.0000 ' / in.	CHECKED - JDS	REVISED -	
PLOT DATE = 11/12/2024	DATE - 10/18/2024	REVISED -	

WOODFORD COUNTY HIGHWAY DEPARTMENT

COUNTY HIGHWAY 13 RECONSTRUCTION AT FRONT ST.
PLAN AND PROFILE – COUNTY HIGHWAY 13

SCALE: | SHEET 3 OF 3 SHEETS | STA. 224+00.00 TO STA. 229+74.48

F.A.S. RTE.	SECTION	COUNTY	TOTAL SHEETS	SHEET NO.
364	20-00091-03 BR	WOODFORD	114	41
		CONTRACT NO. 89854		

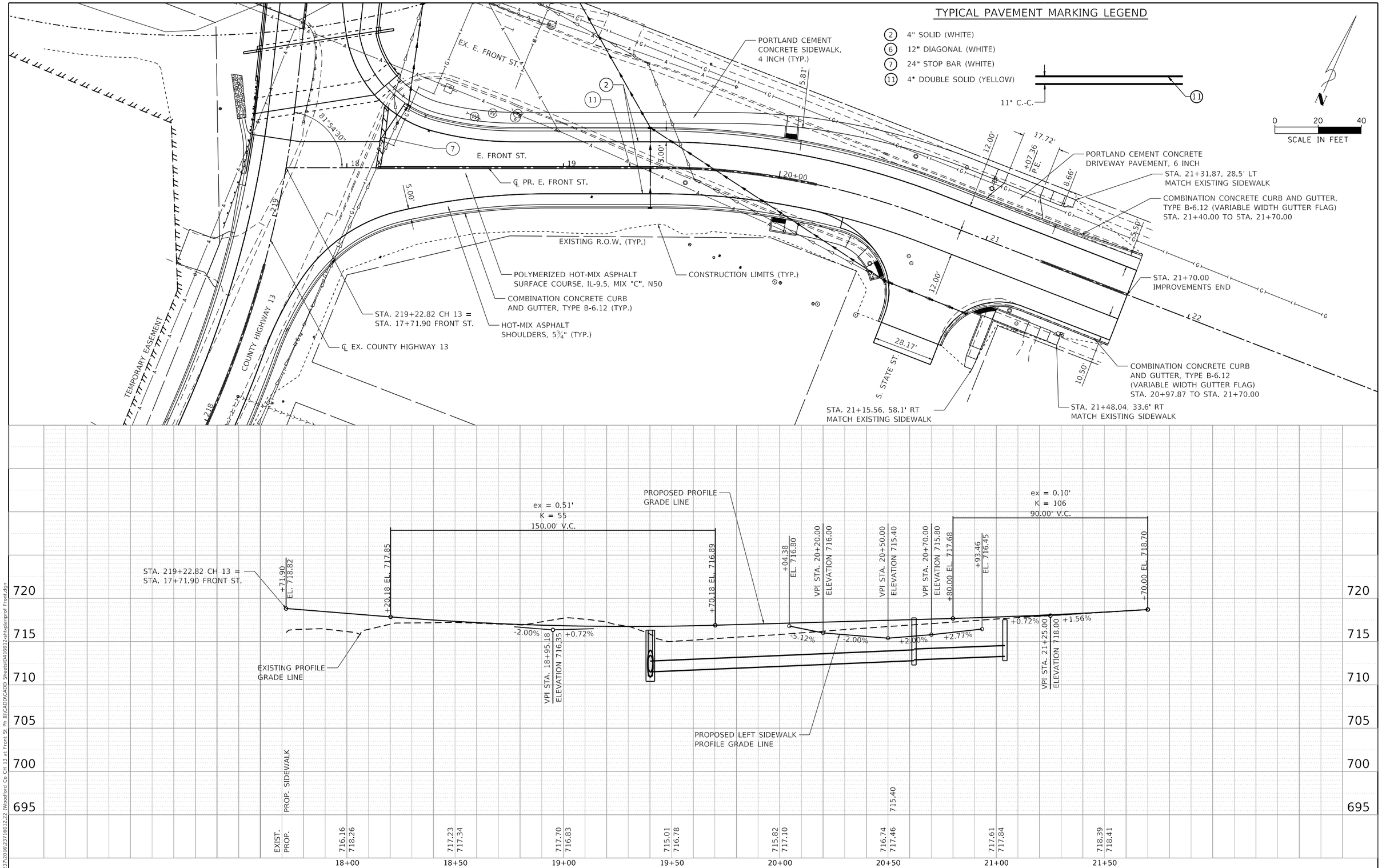

PLAN		BY	DATE
NOTE BOOK NO.____	SURVEYED / PLOTTED / ALIGNMENT CHECKED / RT. OF WAY CHECKED / CADD FILE NAME		

PROFILE		BY	DATE
NOTE BOOK NO.____	SURVEYED / PLOTTED / GRADES CHECKED / B.M. NOTED / STRUCTURE NOTAT'NS CHKD		

MODEL: Default
FILE NAME: S:\2372016\2371601 2.22 (Woodford Co CH 13 at Front St Ph III\CADD\CADD Sheets\D416012-sht-plan-prof Front.dgn

MAURER-STUTZ ENGINEERS SURVEYORS	USER NAME = jdspiller	DESIGNED - CLD	REVISED -
		DRAWN - CAD	REVISED -
	PLOT SCALE = 40.0000 ' / in.	CHECKED - JDS	REVISED -
	PLOT DATE = 11/12/2024	DATE - 10/18/2024	REVISED -

WOODFORD COUNTY HIGHWAY DEPARTMENT

COUNTY HIGHWAY 13 RECONSTRUCTION AT FRONT ST.
PLAN AND PROFILE – FRONT ST.

SCALE: | SHEET 1 OF 1 SHEETS | STA. 17+71.90 TO STA. 21+51.87

F.A.S. RTE.	SECTION	COUNTY	TOTAL SHEETS	SHEET NO.
364	20-00091-03 BR	WOODFORD	114	42
		CONTRACT NO. 89854		

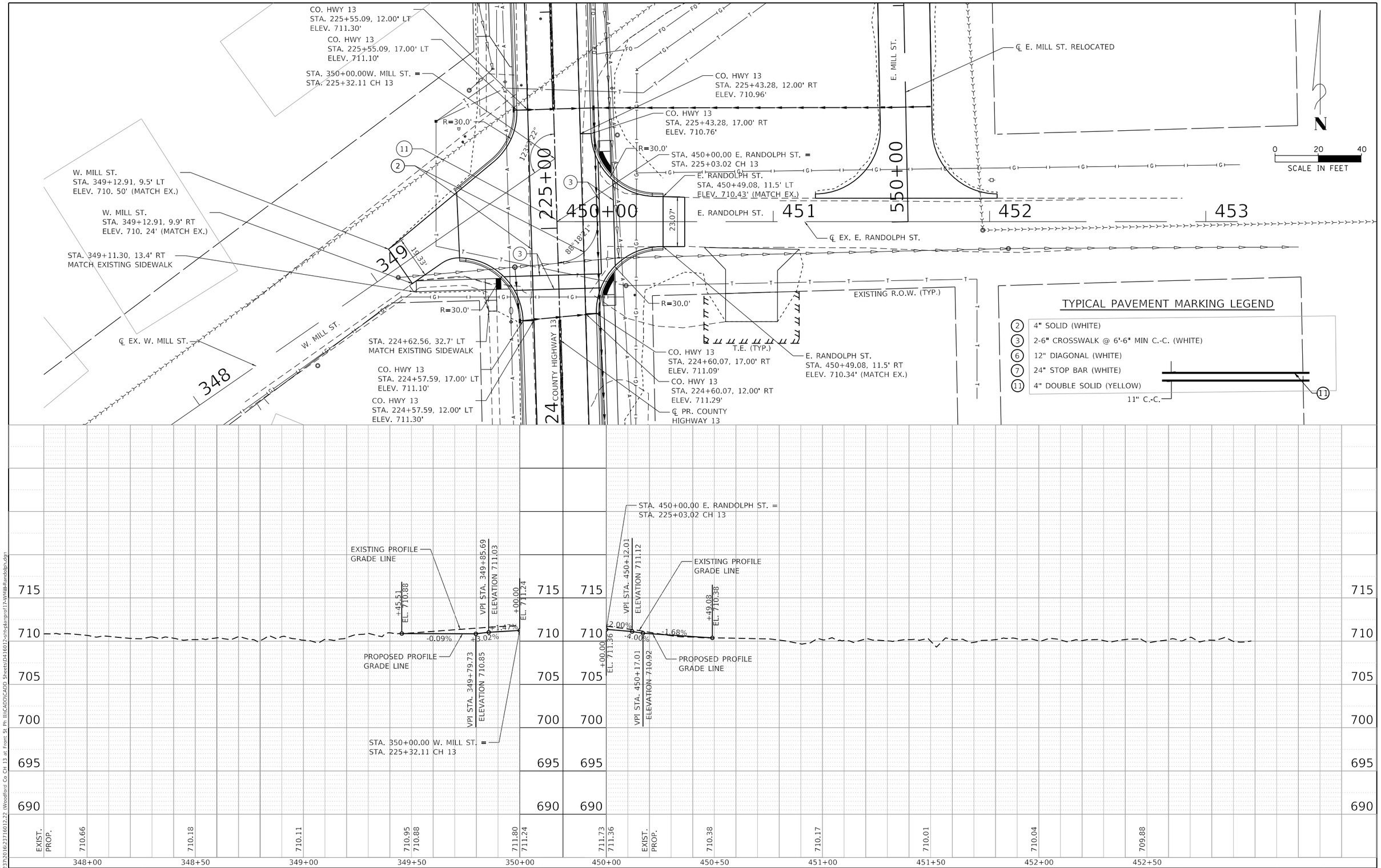

PLAN
SURVEYED
PLOTTED
ALIGNMENT CHECKED
RT. OF WAY CHECKED
CADD FILE NAME
NOTE BOOK
NO.
BY
DATE

PROFILE
SURVEYED
PLOTTED
GRADES CHECKED
B.M. NOTED
STRUCTURE NOTAT'NS CHKD
NOTE BOOK
NO.
BY
DATE

MODEL: Default
FILE NAME: S:\237\2016\23716012.22 (Woodford Co CH 13 at Front St Ph III)\CADD\CADD Sheets\D416012-sht-plan-prof17-WMill-Randolph.dgn

MAURER-STUTZ
ENGINEERS SURVEYORS

USER NAME = jdspiller	DESIGNED - CLD	REVISED -	
	DRAWN - CAD	REVISED -	
PLOT SCALE = 40.0000 ' / in.	CHECKED - JDS	REVISED -	
PLOT DATE = 11/12/2024	DATE - 10/18/2024	REVISED -	

WOODFORD COUNTY
HIGHWAY DEPARTMENT

COUNTY HIGHWAY 13 RECONSTRUCTION AT FRONT ST.
PLAN AND PROFILE – W. MILL ST. AND E. RANDOLPH ST.

SCALE: | SHEET 1 OF 1 SHEETS | STA. TO STA.

F.A.S. RTE.	SECTION	COUNTY	TOTAL SHEETS	SHEET NO.
364	20-00091-03 BR	WOODFORD	114	43
		CONTRACT NO. 89854		

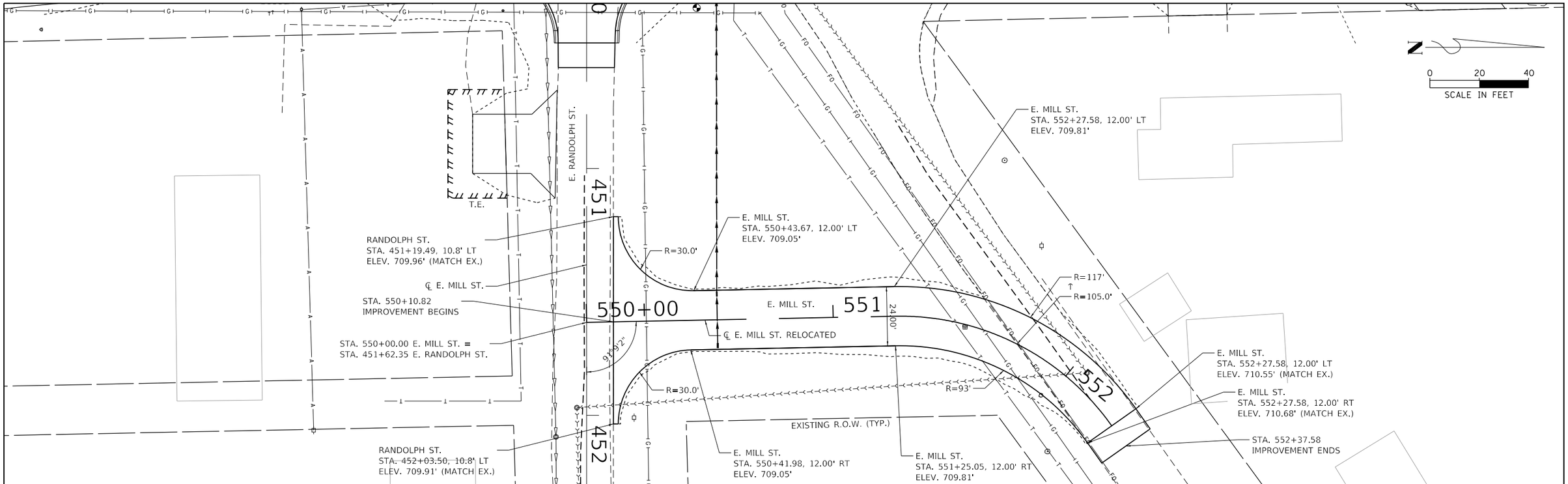

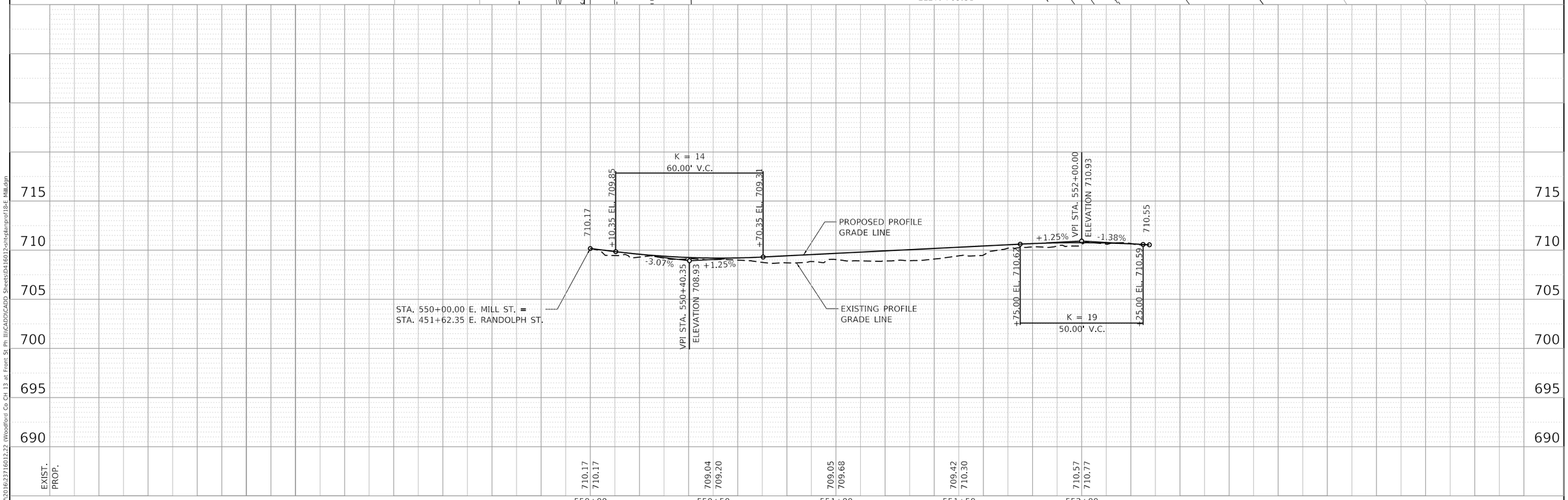

PLAN		BY	DATE
NOTE BOOK NO.____	SURVEYED / PLOTTED / ALIGNMENT CHECKED / RT. OF WAY CHECKED / CADD FILE NAME		

PROFILE		BY	DATE
NOTE BOOK NO.____	SURVEYED / PLOTTED / GRADES CHECKED / B.M. NOTED / STRUCTURE NOTAT'NS CH'KD		

MODEL: Default
FILE NAME: S:\237\2016\23716012.22 \Woodford Co CH 13 at Front St Ph III\CADD\CADD Sheets\D416012-sht-planprof18-E Mill.dgn

MAURER-STUTZ ENGINEERS SURVEYORS

USER NAME = jdspiller	DESIGNED - CLD	REVISED -	
	DRAWN - CAD	REVISED -	
PLOT SCALE = 40.0000 ' / in.	CHECKED - JDS	REVISED -	
PLOT DATE = 11/12/2024	DATE - 10/18/2024	REVISED -	

WOODFORD COUNTY HIGHWAY DEPARTMENT

COUNTY HIGHWAY 13 RECONSTRUCTION AT FRONT ST.
PLAN AND PROFILE – E. MILL ST.

SCALE: | SHEET 1 OF 1 SHEETS | STA. 550+00.00 TO STA. 552+27.58

F.A.S. RTE.	SECTION	COUNTY	TOTAL SHEETS	SHEET NO.
364	20-00091-03 BR	WOODFORD	114	44
		CONTRACT NO. 89854		

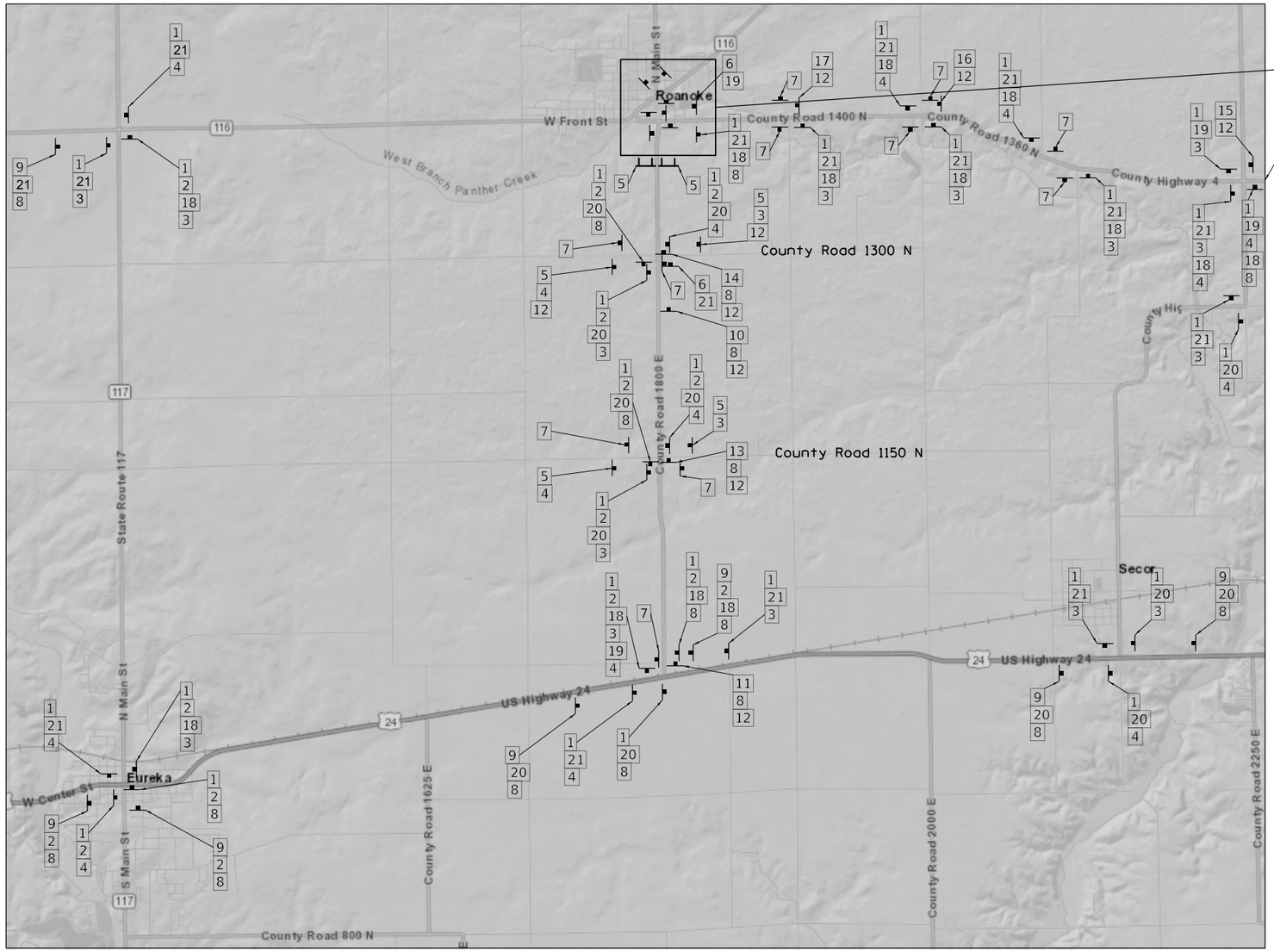

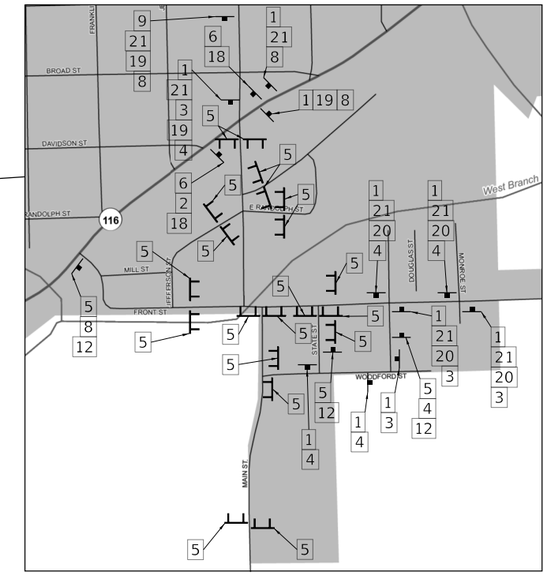

SEE SHEET 46 FOR CONTINUATION OF DETOURS FOR COUNTY HIGHWAY 13 AND MAIN ST.

NOTE:
CONTRACTOR SHALL PLACE [22 | 12] CONFIGURATION AT INTERSECTION OF COUNTY HIGHWAY 4/IL251 (WEST SIDE OF IL 251)

N

0 .5 1
SCALE IN MILES

MODEL: Default
FILE NAME: S:\237\2016\23716012-22 \Woodford Co CH 13 at Front St Ph III\CADD\CADD Sheets\041612-sht-Detour.dgn

MAURER-STUTZ ENGINEERS SURVEYORS	USER NAME = jdspiller	DESIGNED - CLD	REVISED -	WOODFORD COUNTY HIGHWAY DEPARTMENT	COUNTY HIGHWAY 13 RECONSTRUCTION AT FRONT ST. DETOUR PLAN	F.A.S. RTE.	SECTION	COUNTY	TOTAL SHEETS / SHEET NO.
		DRAWN - CAD	REVISED -			364	20-00091-03-BR	WOODFORD	114 / 45
	PLOT SCALE = 40.0000 ' / in.	CHECKED - JDS	REVISED -					CONTRACT NO. 89854	
	PLOT DATE = 11/12/2024	DATE - 10/18/2024	REVISED -		SCALE: SHEET 1 OF 2 SHEETS STA. TO STA.				

LEGEND

1	M4-8	DETOUR
2	M1-6.1-8	WOODFORD 13 COUNTY / NORTH
3	W1-6R	
4	W1-6L	
5	R11-2	ROAD CLOSED
6	M4-8a	END DETOUR
7	48X30	NO DETOUR
8	M6-3 ORANGE	
9	W20-2a	DETOUR AHEAD
10	W20-3	ROAD CLOSED AHEAD 1.0 MI
11	W20-3	ROAD CLOSED AHEAD 3.8 MI
12	W14-2	NO OUTLET
13	W20-3	ROAD CLOSED AHEAD 2.3 MI
14	W20-3	ROAD CLOSED AHEAD 0.7 MI
15	W20-3	ROAD CLOSED AHEAD 4.3 MI
16	W20-3	ROAD CLOSED AHEAD 1.8 MI
17	W20-3	ROAD CLOSED AHEAD 0.8 MI
18		N. MAIN ST. ROANOKE, IL
19		S. MAIN ST. ROANOKE, IL
20		MAIN ST. ROANOKE, IL
21	M1-6.1-8	WOODFORD 13 COUNTY / SOUTH
22	W20-3	ROAD CLOSED AHEAD 8.9 MI

TYPE III BARRICADE

N

0 .5 1
SCALE IN MILES

MODEL: Default
FILE NAME: S:\237\2016\23716012.22 Woodford Co CH 13 at Front St ph III\CADD\CADD Sheets\D416012-sht-Detour.dgn

MAURER-STUTZ ENGINEERS SURVEYORS

USER NAME = jdspiller	DESIGNED - CLD	REVISED -	
	DRAWN - CAD	REVISED -	
PLOT SCALE = 40.0000 ' / in.	CHECKED - JDS	REVISED -	
PLOT DATE = 11/12/2024	DATE - 10/18/2024	REVISED -	

WOODFORD COUNTY HIGHWAY DEPARTMENT

COUNTY HIGHWAY 13 RECONSTRUCTION AT FRONT ST.
DETOUR PLAN

SCALE: | SHEET 2 OF 2 SHEETS | STA. TO STA.

F.A.S. RTE.	SECTION	COUNTY	TOTAL SHEETS	SHEET NO.
364	20-00091-03-BR	WOODFORD	114	46
		CONTRACT NO. 89854		

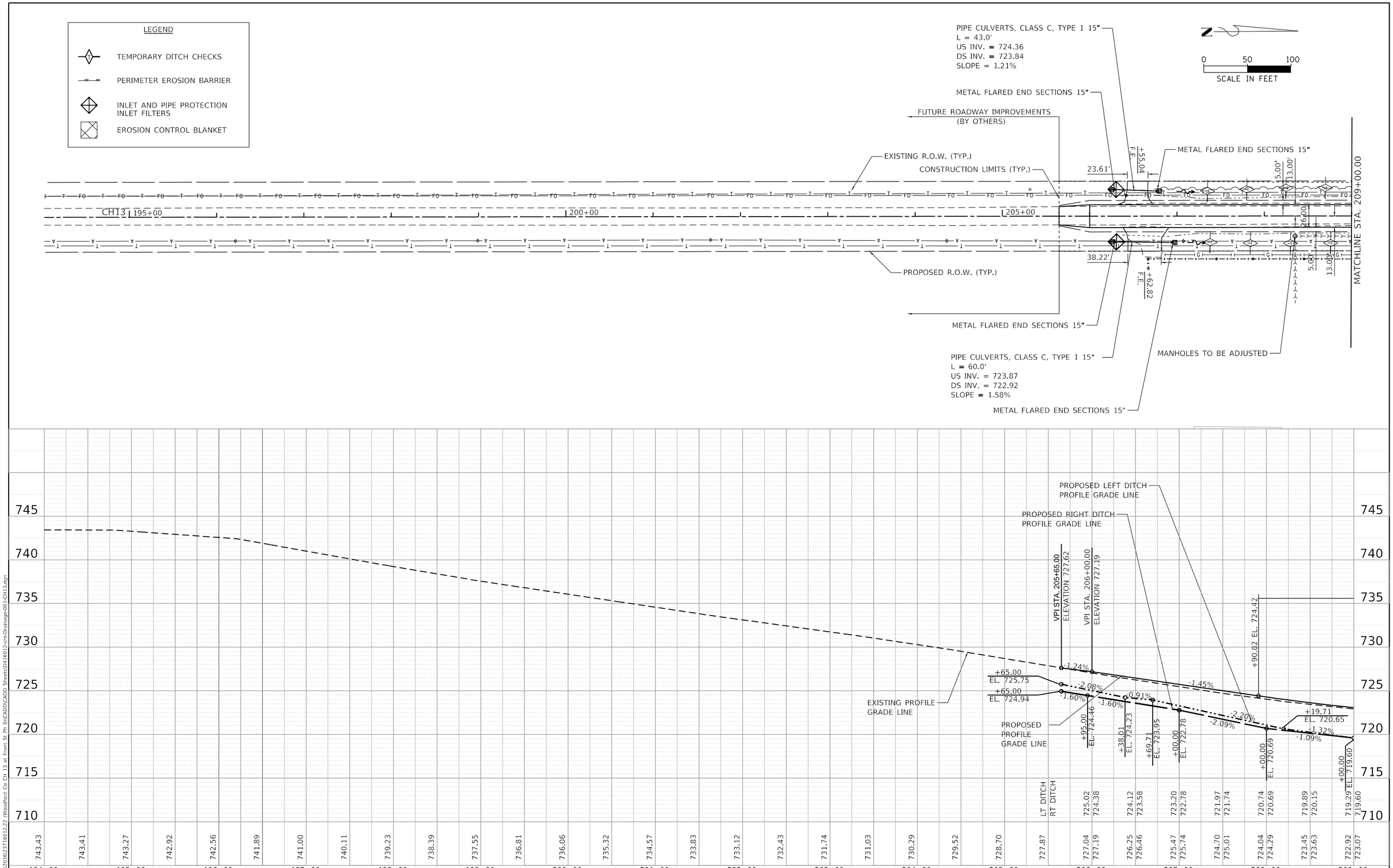
LEGEND
TEMPORARY DITCH CHECKS
PERIMETER EROSION BARRIER
INLET AND PIPE PROTECTION
INLET FILTERS
EROSION CONTROL BLANKET
PIPE CULVERTS, CLASS C, TYPE 1 15"
L = 43.0'
US INV. = 724.36
DS INV. = 723.84
SLOPE = 1.21%
METAL FLARED END SECTIONS 15"
FUTURE ROADWAY IMPROVEMENTS
(BY OTHERS)
EXISTING R.O.W. (TYP.)
CONSTRUCTION LIMITS (TYP.)
PROPOSED R.O.W. (TYP.)
METAL FLARED END SECTIONS 15"
PIPE CULVERTS, CLASS C, TYPE 1 15"
L = 60.0'
US INV. = 723.87
DS INV. = 722.92
SLOPE = 1.58%
METAL FLARED END SECTIONS 15"
MANHOLES TO BE ADJUSTED
METAL FLARED END SECTIONS 15"
METAL FLARED END SECTIONS 15"
0 50 100
SCALE IN FEET
CH13
195+00
200+00
205+00
23.61'
38.22'
+55.04
F.E.
+62.82
F.E.
15.00'
13.00'
26.00'
5.00'
13.00'
MATCHLINE STA. 209+00
PROPOSED LEFT DITCH
PROFILE GRADE LINE
PROPOSED RIGHT DITCH
PROFILE GRADE LINE
VPI STA. 205+65.00
ELEVATION 727.62
VPI STA. 206+00.00
ELEVATION 727.19
+90.82 EL. 724.42
-1.24%
-2.08%
-1.60%
-1.60%
0.91%
-1.45%
-2.20%
-2.09%
-1.32%
-1.09%
+65.00
EL. 725.75
+65.00
EL. 724.94
EXISTING PROFILE
GRADE LINE
PROPOSED
PROFILE
GRADE LINE
+95.00
EL. 724.46
+38.01
EL. 724.23
+69.71
EL. 723.95
+00.00
EL. 722.78
+19.71
EL. 720.65
+00.00
EL. 720.69
+00.00
EL. 719.60
745
740
735
730
725
720
715
710
LT DITCH
RT DITCH
725.02 724.38
724.12 723.58
723.20 722.78
721.97 721.74
720.74 720.69
719.89 720.15
719.29 719.60
743.43
743.41
743.27
742.92
742.56
741.89
741.00
740.11
739.23
738.39
737.55
736.81
736.06
735.32
734.57
733.83
733.12
732.43
731.74
731.03
730.29
729.52
728.70
727.87
727.04 727.19
726.25 726.46
725.47 725.74
724.70 725.01
724.04 724.29
723.45 723.63
722.92 723.07
194+00
195+00
196+00
197+00
198+00
199+00
200+00
201+00
202+00
203+00
204+00
205+00
206+00
207+00
208+00
209+00
PLAN
SURVEYED
PLOTTED
ALIGNMENT CHECKED
RT. OF WAY CHECKED
CADD FILE NAME
NOTE BOOK
NO.
BY
DATE
PROFILE
SURVEYED
PLOTTED
GRADES CHECKED
B.M. NOTED
STRUCTURE NOTAT'NS CH'KD
NOTE BOOK
NO.
BY
DATE
MODEL: Default
FILE NAME: S:\2370\2016\2371601\2.2 (Woodford Co CH 13 at Front St Ph III\CADD\CADD Sheets\D416012-sht-Drainage-001-CH13.dgn
MAURER-STUTZ
ENGINEERS SURVEYORS
USER NAME = jdspiller
PLOT SCALE = 100.0000 ' / in.
PLOT DATE = 11/12/2024
DESIGNED - CLD
DRAWN - CAD
CHECKED - JDS
DATE - 10/18/2024
REVISED -
REVISED -
REVISED -
REVISED -
WOODFORD COUNTY
HIGHWAY DEPARTMENT
COUNTY HIGHWAY 13 RECONSTRUCTION AT FRONT ST.
DRAINAGE PLAN AND PROFILE – COUNTY HIGHWAY 13
SCALE:
SHEET 1 OF 3 SHEETS
STA. 205+65.00 TO STA. 209+00.00
F.A.S. RTE. 364
SECTION 20-00091-03 BR
COUNTY WOODFORD
TOTAL SHEETS 114
SHEET NO. 47
CONTRACT NO. 89854

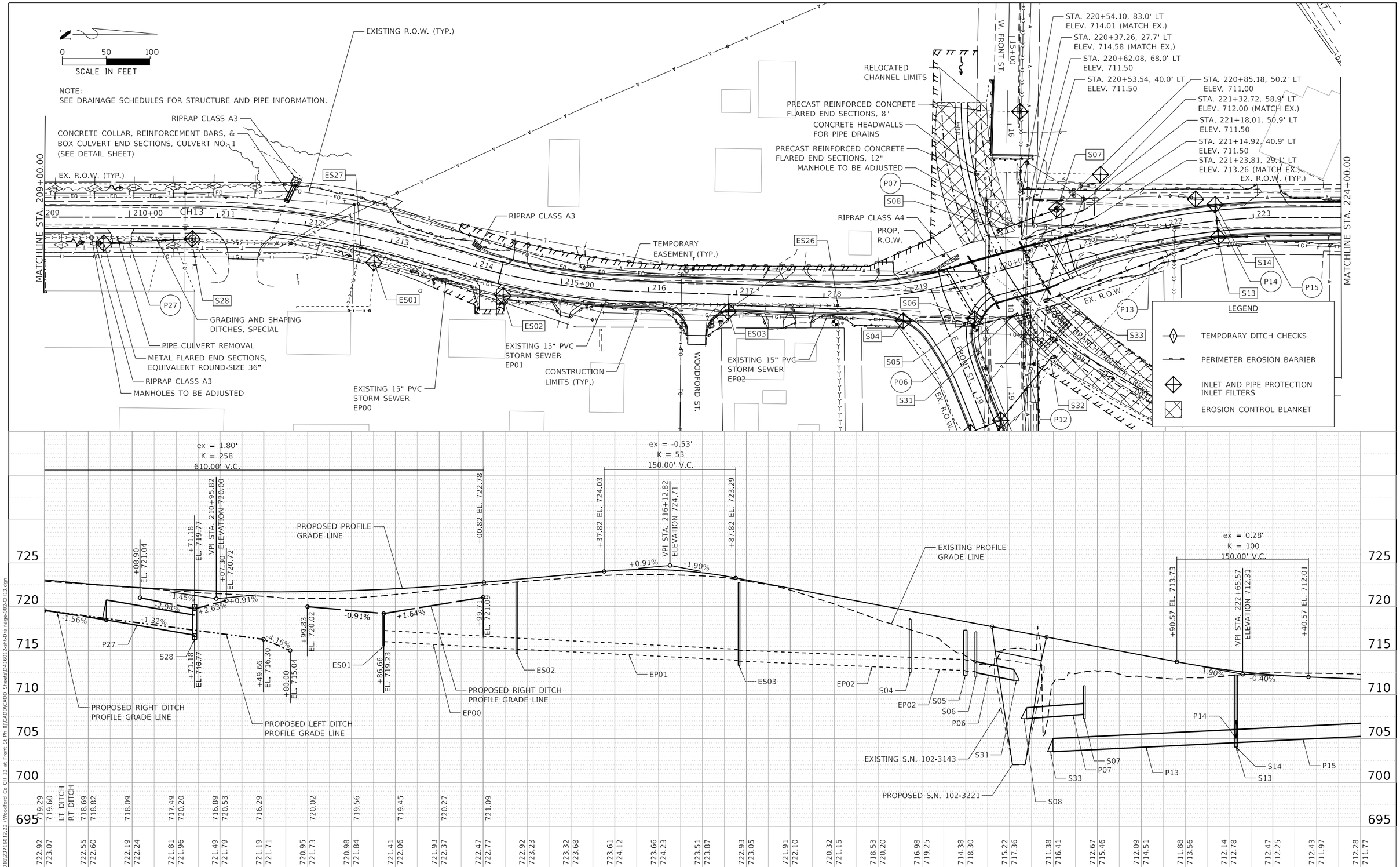

MAURER-STUTZ ENGINEERS SURVEYORS

USER NAME = jdspiller	DESIGNED - CLD	REVISED -	
	DRAWN - CAD	REVISED -	
PLOT SCALE = 100.0000 ' / in.	CHECKED - JDS	REVISED -	
PLOT DATE = 11/12/2024	DATE - 10/18/2024	REVISED -	

WOODFORD COUNTY HIGHWAY DEPARTMENT

COUNTY HIGHWAY 13 RECONSTRUCTION AT FRONT ST.
DRAINAGE PLAN AND PROFILE – COUNTY HIGHWAY 13

SCALE: | SHEET 2 OF 3 SHEETS | STA. 209+00.00 TO STA. 224+00.00

F.A.S. RTE.	SECTION	COUNTY	TOTAL SHEETS	SHEET NO.
364	20-00091-03 BR	WOODFORD	114	48
		CONTRACT NO. 89854		

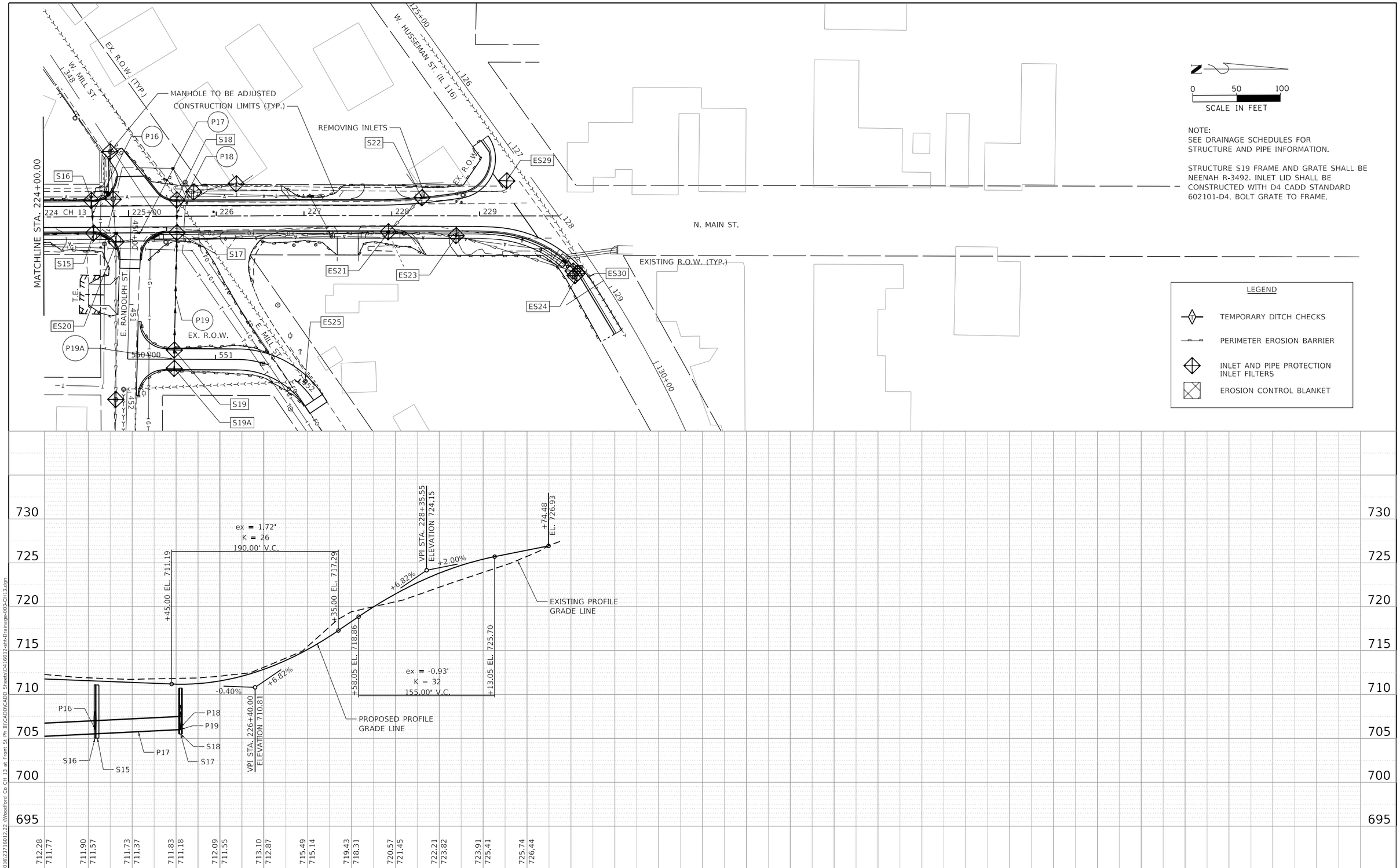

PLAN
SURVEYED
PLOTTED
ALIGNMENT CHECKED
RT. OF WAY CHECKED
CADD FILE NAME
NOTE BOOK
NO.
BY
DATE

PROFILE
SURVEYED
PLOTTED
GRADES CHECKED
B.M. NOTED
STRUCTURE NOTATIONS CHKD
NOTE BOOK
NO.
BY
DATE

MODEL: Default
FILE NAME: Ss:\237\2016\23716012.22 (Woodford Co CH 13 at Front St Ph III\CADD\CADD Sheets\D416012-sht-Drainage-003-CH13.dgn

MAURER-STUTZ
ENGINEERS SURVEYORS

USER NAME = jdspiller	DESIGNED - CLD	REVISED -
	DRAWN - CAD	REVISED -
PLOT SCALE = 100.0000 ' / in.	CHECKED - JDS	REVISED -
PLOT DATE = 11/12/2024	DATE - 10/18/2024	REVISED -

WOODFORD COUNTY
HIGHWAY DEPARTMENT

COUNTY HIGHWAY 13 RECONSTRUCTION AT FRONT ST.
DRAINAGE PLAN AND PROFILE – COUNTY HIGHWAY 13

SCALE: | SHEET 3 OF 3 SHEETS | STA. 224+00.00 TO STA. 229+74.48

F.A.S. RTE.	SECTION	COUNTY	TOTAL SHEETS	SHEET NO.
364	20-00091-03 BR	WOODFORD	114	49
		CONTRACT NO. 89854		

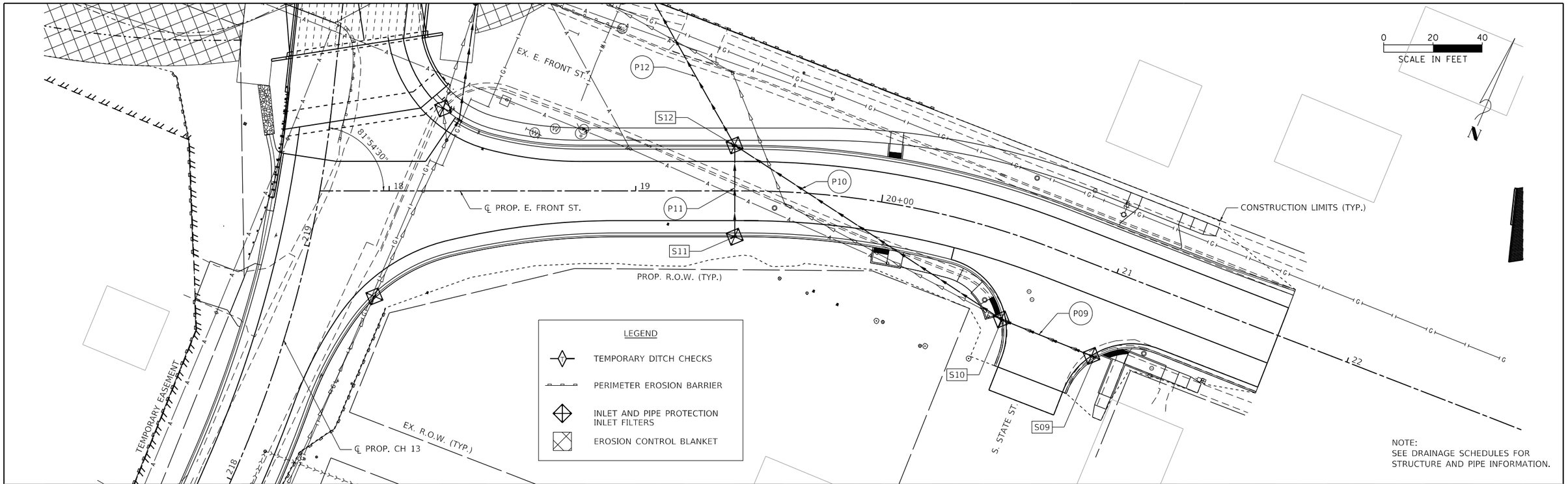

NOTE:
SEE DRAINAGE SCHEDULES FOR
STRUCTURE AND PIPE INFORMATION.

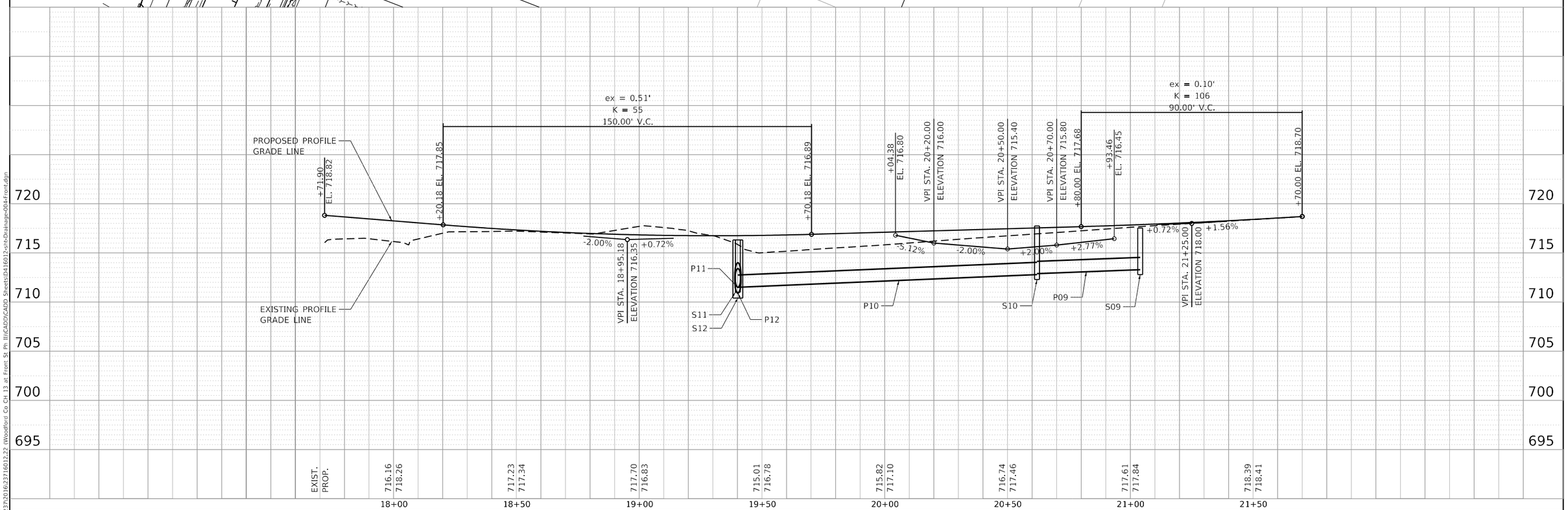

PLAN		BY	DATE
SURVEYED			
PLOTTED			
ALIGNMENT CHECKED			
RT. OF WAY CHECKED			
CADD FILE NAME			
NOTE BOOK			
NO.			

PROFILE		BY	DATE
SURVEYED			
PLOTTED			
GRADES CHECKED			
B.M. NOTED			
STRUCTURE NOTATNS CHKD			
NOTE BOOK			
NO.			

MODEL: Default
FILE NAME: $s:\237\2016\23716012.22 \Woodford Co CH 13 at Front St Ph III\CADD\CADD Sheets\D416012-sht-Drainage-004-Front.dgn

MAURER-STUTZ
ENGINEERS SURVEYORS

USER NAME = jdspiller	DESIGNED - CLD	REVISED -	
	DRAWN - CAD	REVISED -	
PLOT SCALE = 40.0000 ' / in.	CHECKED - JDS	REVISED -	
PLOT DATE = 11/12/2024	DATE - 10/18/2024	REVISED -	

WOODFORD COUNTY
HIGHWAY DEPARTMENT

COUNTY HIGHWAY 13 RECONSTRUCTION AT FRONT ST.
DRAINAGE PLAN AND PROFILE – FRONT ST.

SCALE: | SHEET 1 OF 1 SHEETS | STA. 18+40.24 TO STA. 21+26.87

F.A.S. RTE.	SECTION	COUNTY	TOTAL SHEETS	SHEET NO.
364	20-00091-03 BR	WOODFORD	114	50
		CONTRACT NO. 89854		

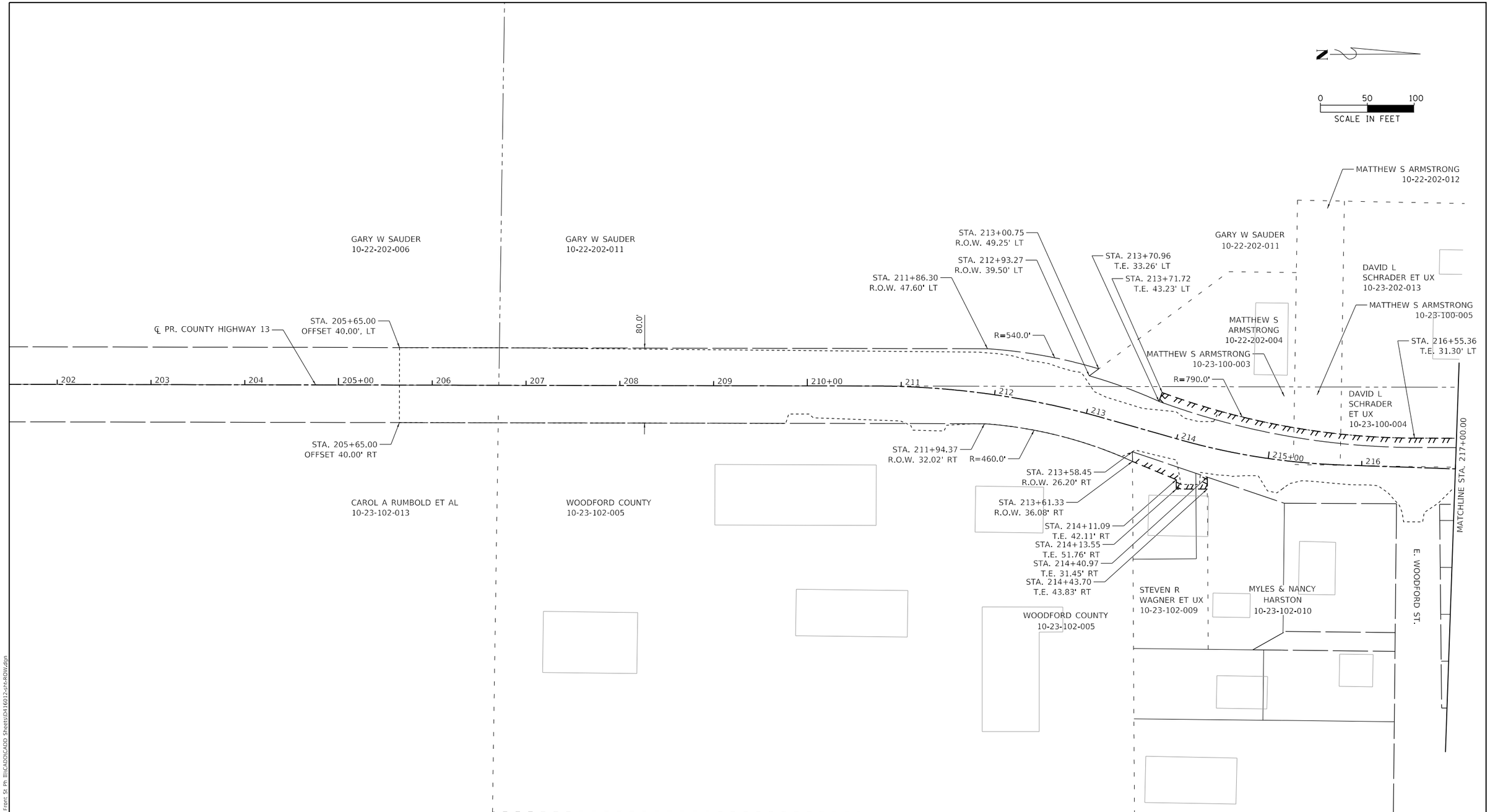

MODEL: Default
FILE NAME: S:\23\2016\23716012.22 (Woodford Co CH 13 at Front St Ph III)\CADD\CADD Sheets\D416012-sht-ROW.dgn

MAURER-STUTZ
ENGINEERS SURVEYORS

USER NAME = jdspiller	DESIGNED - CLD	REVISED -	
	DRAWN - CAD	REVISED -	
PLOT SCALE = 100.0000 ' / in.	CHECKED - JDS	REVISED -	
PLOT DATE = 11/12/2024	DATE - 10/18/2024	REVISED -	

WOODFORD COUNTY
HIGHWAY DEPARTMENT

COUNTY HIGHWAY 13 RECONSTRUCTION AT FRONT ST.
RIGHT OF WAY PLAN

SCALE: 1" = 50' | SHEET 1 OF 2 SHEETS | STA. 205+65.00 TO STA. 217+00.00

F.A.S. RTE.	SECTION	COUNTY	TOTAL SHEETS	SHEET NO.
364	20-00091-03-BR	WOODFORD	114	51
		CONTRACT NO. 89854		

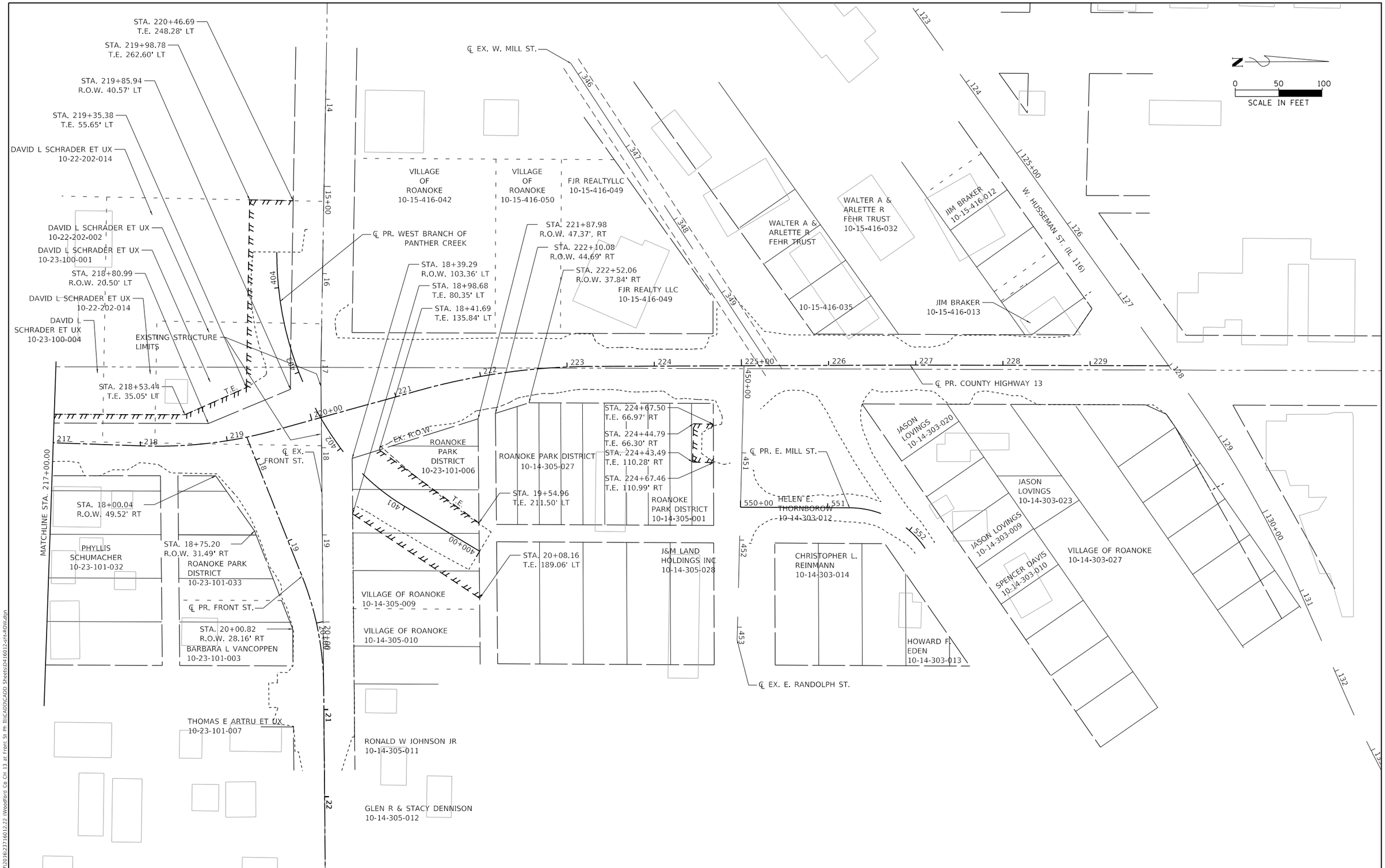

MODEL: Default
FILE NAME: S:\37\2016\23716012-22 IWoodford Co CH 13 at Front St Ph IIIICADD\CADD Sheets\04160 12-sht-ROW.dgn

MAURER-STUTZ ENGINEERS SURVEYORS	USER NAME = jdspiller	DESIGNED - CLD	REVISED -
		DRAWN - CAD	REVISED -
	PLOT SCALE = 100.0000 ' / in.	CHECKED - JDS	REVISED -
	PLOT DATE = 11/12/2024	DATE - 10/18/2024	REVISED -

WOODFORD COUNTY
HIGHWAY DEPARTMENT

COUNTY HIGHWAY 13 RECONSTRUCTION AT FRONT ST.
RIGHT OF WAY PLAN

SCALE: 1" = 50' | SHEET 2 OF 2 SHEETS | STA. 217+00.00 TO STA. 229+74.48

F.A.S. RTE.	SECTION	COUNTY	TOTAL SHEETS	SHEET NO.
364	20-00091-03-BR	WOODFORD	114	52
		CONTRACT NO. 89854		

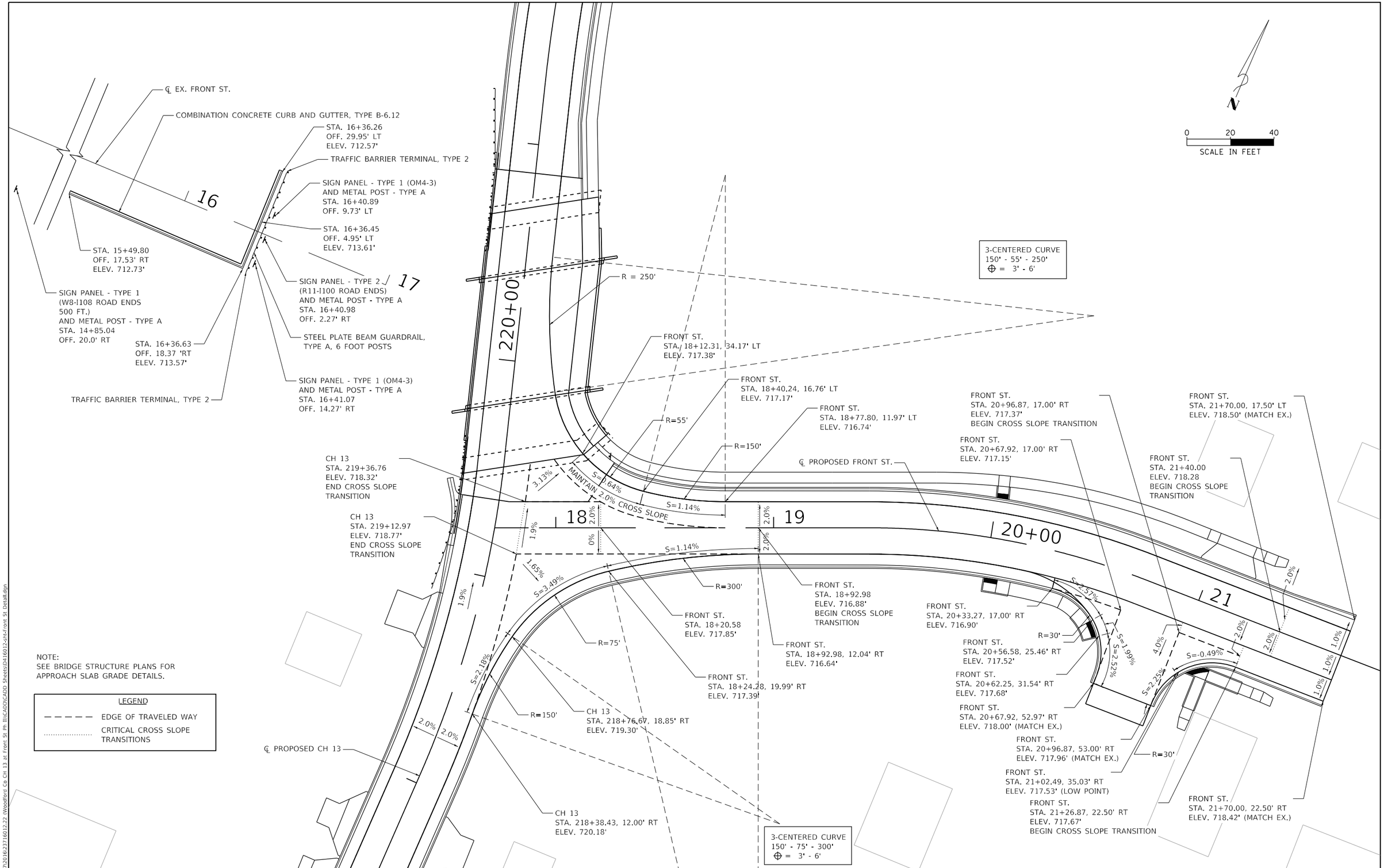

NOTE:
SEE BRIDGE STRUCTURE PLANS FOR
APPROACH SLAB GRADE DETAILS.

LEGEND

- — — — — EDGE OF TRAVELED WAY
- ..... CRITICAL CROSS SLOPE TRANSITIONS

MODEL: Default
FILE NAME: S:\237\2016\2371602-22 (Woodford Co CH 13 at Front St Ph II)\CADD\CADD Sheets\0416012-sht-Front St Detail.dgn

MAURER-STUTZ
ENGINEERS SURVEYORS

USER NAME = jdspiller	DESIGNED - CLD	REVISED -	
	DRAWN - CAD	REVISED -	
PLOT SCALE = 40.0000 ' / in.	CHECKED - JDS	REVISED -	
PLOT DATE = 11/12/2024	DATE - 10/18/2024	REVISED -	

WOODFORD COUNTY
HIGHWAY DEPARTMENT

COUNTY HIGHWAY 13 RECONSTRUCTION AT FRONT ST.
INTERSECTION DETAIL SHEET – FRONT ST.

SCALE: 1" = 20' | SHEET 1 OF 1 SHEETS | STA. 18+40.24 TO STA. 21+26.87

F.A.S. RTE.	SECTION	COUNTY	TOTAL SHEETS	SHEET NO.
364	20-00091-03-BR	WOODFORD	114	53
		CONTRACT NO. 89854		

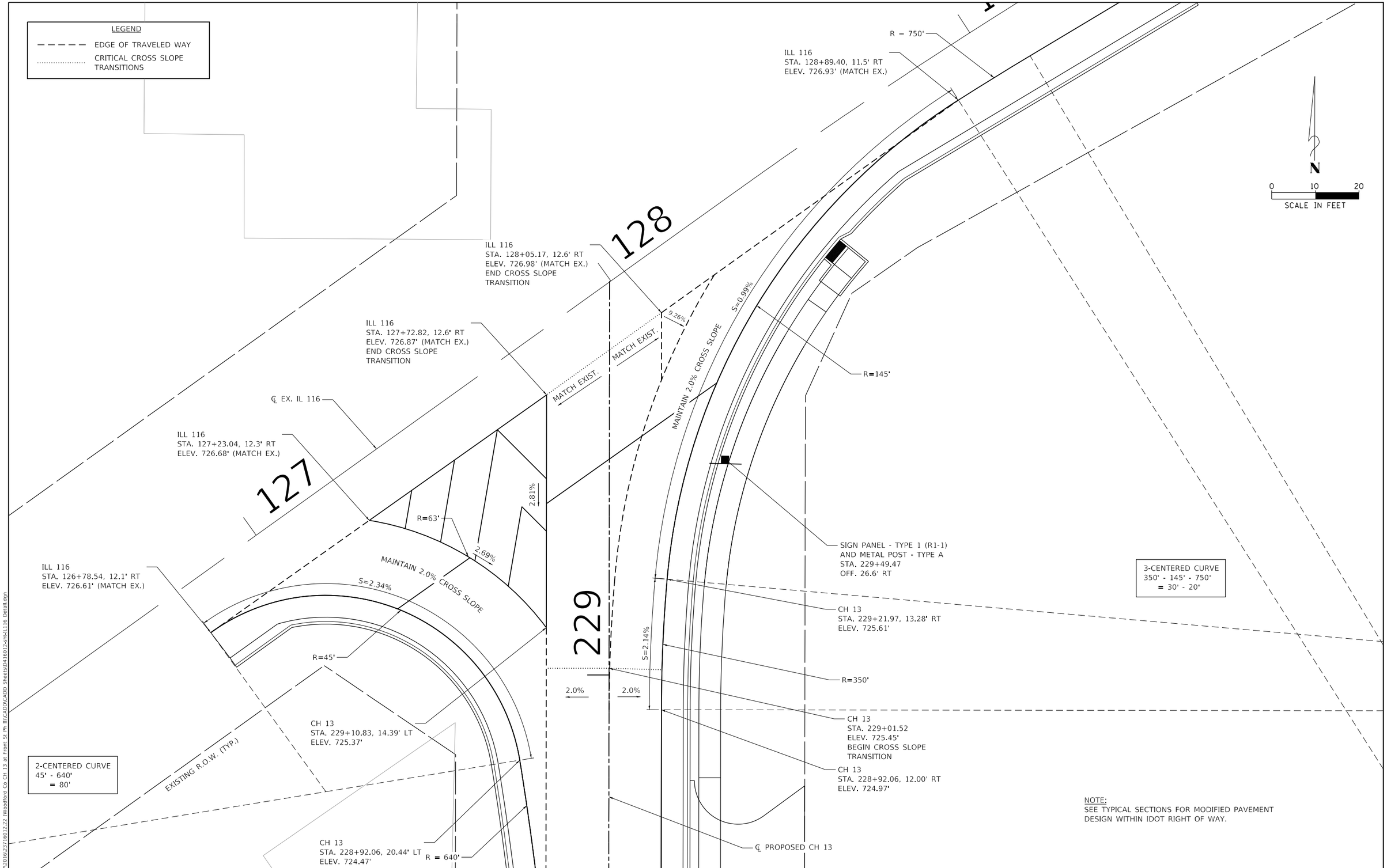

MODEL: Default
FILE NAME: S:\2372016\2371601\2.2 Woodford Co CH 13 at Front St Ph III\CADD\CADD Sheets\D416012-sht-IL116 Detail.dgn

MAURER-STUTZ
ENGINEERS SURVEYORS

USER NAME = jdspiller	DESIGNED - CLD	REVISED -
	DRAWN - CAD	REVISED -
PLOT SCALE = 20.0000 ' / in.	CHECKED - JDS	REVISED -
PLOT DATE = 11/12/2024	DATE - 10/18/2024	REVISED -

WOODFORD COUNTY
HIGHWAY DEPARTMENT

COUNTY HIGHWAY 13 RECONSTRUCTION AT FRONT ST.
INTERSECTION DETAIL SHEET – IL 116

SCALE: 1" = 10' | SHEET 1 OF 1 SHEETS | STA. 228+95.89 TO STA. 229+90.28

F.A.S. RTE.	SECTION	COUNTY	TOTAL SHEETS	SHEET NO.
364	20-00091-03-BR	WOODFORD	114	54
		CONTRACT NO. 89854		

Bench Mark - B.M. #402, ENE cap bolt on fire hydrant located in the northwest quadrant of the intersection of County Highway 13 and Front St., Sta. 221+05.30, 64.61' LT, Elev. 714.30

Existing Structure - S.N. 102-3143; Built in 1981, the structure consists of a single span PPC deck beam superstructure and sidewalk supported on HP pile bent abutments. The bridge dimensions are 44'-0" out to out by 56'-9½" back to back of abutments. The structure shall be removed and replaced under full road closure.

Salvage - None.

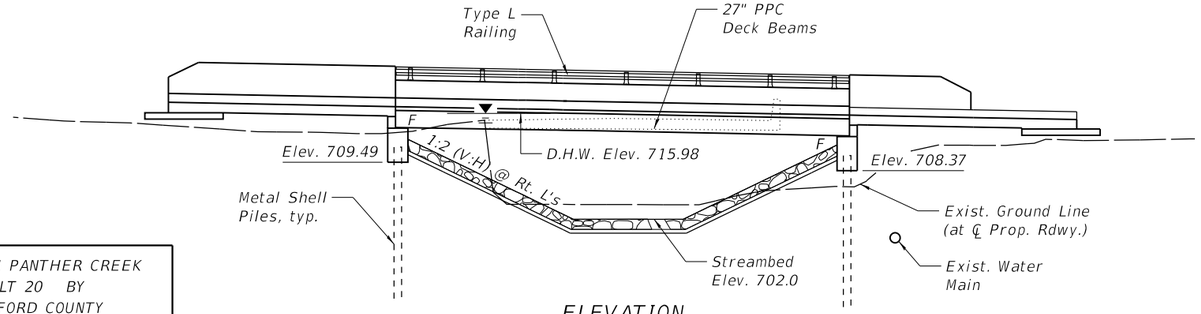

ELEVATION
(Looking West)

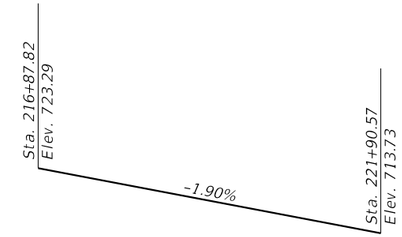

PROFILE GRADE
(along ℄ Rdwy.)

W. BRANCH PANTHER CREEK
BUILT 20 BY
WOODFORD COUNTY
SEC. 20-00091-03-BR
F.A.S. 364 STA. 220+11
STR. NO. 102-3221 LOADING HL-93

NAME PLATE
See Std. 515001

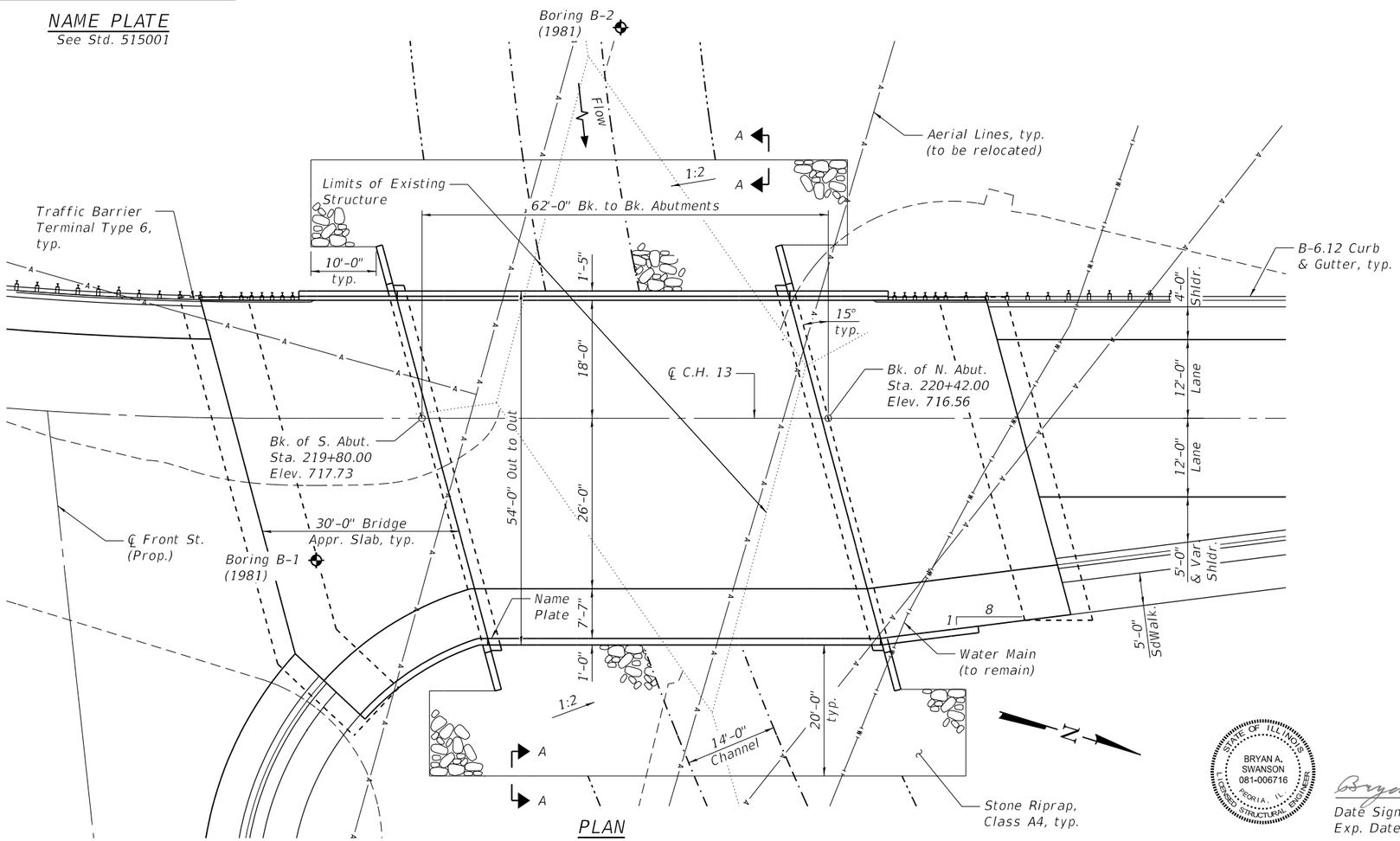

PLAN

INDEX OF SHEETS

LOADING HL-93

Allow 50#/sq. ft. for future wearing surface.

DESIGN SPECIFICATIONS

2020 AASHTO LRFD Bridge Design Specifications, 9th Edition

DESIGN STRESSES

FIELD UNITS

f'c = 3,500 psi
f'c = 4,000 psi (Superstructure)
fy = 60,000 psi (Reinforcement)

PREAST PRESTRESSED UNITS

f'c = 6,000 psi
f'ci = 5,000 psi
fs = 270,000 psi (1/2" Strands)
fsi - 201,960 psi (1/2" Strands)

SEISMIC DATA

Seismic Performance Zone (SPZ) = 1
Design Spectral Acceleration at 1.0 sec. (SD1) = 0.111 g
Design Spectral Acceleration at 0.2 sec. (SDS) = 0.176 g
Soil Site Class = D

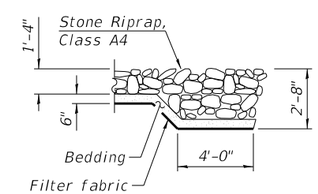

SECTION A-A

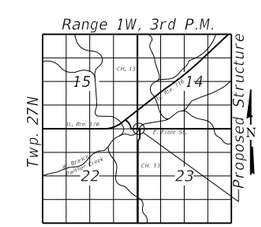

LOCATION SKETCH

STATE OF ILLINOIS
BRYAN A. SWANSON
081-006716
PEORIA, IL
LICENSED STRUCTURAL ENGINEER

Bryan Swanson
Date Signed: 12/02/2024
Exp. Date: 11/30/2026

GENERAL PLAN AND ELEVATION
CH 13 OVER WEST BRANCH
OF PANTHER CREEK
F.A.S. 364 - SEC. 20-00091-03-BR
WOODFORD COUNTY
STA. 220+11.00
STRUCTURE NO. 102-3221

MAURER-STUTZ ENGINEERS SURVEYORS

USER NAME = baswanson	DESIGNED - MSM	REVISED -	
	CHECKED - LVM	REVISED -	
PLOT SCALE =	DRAWN - KJA	REVISED -	
PLOT DATE = 12/2/2024	CHECKED - BAS	REVISED -	

WOODFORD COUNTY
HIGHWAY DEPARTMENT

SHEET 1 OF 18 SHEETS

F.A.S. RTE.	SECTION	COUNTY	TOTAL SHEETS	SHEET NO.
364	20-00091-03-BR	WOODFORD	114	55
		CONTRACT NO. 89854		

MODEL: Default
FILE NAME: S:\237\2016\2371601 2.22 (Woodford Co CH 13 at Front St Ph III\CADD\CADD Sheets\1023221-001-Gen Plan and Elev.dgn
12/2/2024 8:16:08 AM

WATERWAY INFORMATION

Drainage Area = 15.24 Sq. Mi.

Exist. Low Grade Elev.: Front St. - 713.37 @ Sta. 15+58.49/CH 13 - 711.72 @ Sta. 229+78.10
Prop. Low Grade Elev.: Front St. - 713.37 @ Sta. 15+58.49/CH 13 - 711.17 @ Sta. 225+55.54

Flood	Freq. Yr.	Q C.F.S.	Opening Ft²		Nat. H.W.E.		Head - Ft.		Headwater El.	
			Exist.	Prop.	Exist.	Prop.	Exist.	Prop.	Exist.	Prop.
Ten-Year	10	2007-2011	365/1000	419/737	714.67	714.71	0.07	0.07	714.74	714.78
Design	30	2667-2673	365/1856	419/1398	715.91	715.98	0.09	0.05	716.00	716.03
Base	100	3607-3612	365/2892	419/2234	717.21	717.31	0.11	0.03	717.32	717.34
Overtopping	10	2007-2011	365/1000	419/737	714.67	714.71	0.07	0.07	714.74	714.78

Exist. 10-Year Velocity - 1.58 fps
Prop. 10-Year Velocity - 2.57 fps

Note: Prop. CH 13 Sta. 225+55.54 = Exist. CH 13 Sta. 230+37.66

DESIGN SCOUR ELEVATION TABLE

Event / Limit State	Design Scour Elevations (ft.)		
	S. Abut.	N. Abut.	Item 113
Q100	709.5	708.4	8
Q200	709.5	708.4	
Design	709.5	708.4	
Check	709.5	708.4	

TOTAL BILL OF MATERIAL

ITEM	UNIT	SUPER	SUB	TOTAL
Stone Riprap, Class A4	Sq. Yd.		728	728
Filter Fabric	Sq. Yd.		728	728
Removal of Existing Structures	Each			1
Structure Excavation	Cu. Yd.		176	176
Concrete Structures	Cu. Yd.		103.0	103.0
Concrete Superstructure	Cu. Yd.	44.2		44.2
Bridge Deck Grooving	Sq. Yd.	575		575
Concrete Encasement	Cu. Yd.		9.2	9.2
Protective Coat	Sq. Yd.	794		794
Concrete Superstructure (Approach Slab)	Cu. Yd.	152.9		152.9
Precast Prestressed Concrete Deck Beams (27" Depth)	Sq. Ft.	3236		3236
Reinforcement Bars, Epoxy Coated	Pound	73470	16560	90030
Aluminum Railing, Type L	Foot	60		60
Furnishing Metal Shell Piles 12" x 0.250"	Foot		540	540
Driving Piles	Foot		540	540
Test Pile Metal Shells	Each		2	2
Pile Shoes	Each		20	20
Name Plates	Each	1		1
Granular Backfill for Structures	Cu. Yd.		185	185
Geocomposite Wall Drain	Sq. Yd.		77	77
Concrete Headwalls for Pipe Drains	Each		4	4
Pipe Underdrains for Structures 4"	Foot		182	182
Concrete Wearing Surface, 5"	Sq. Yd.	364		364

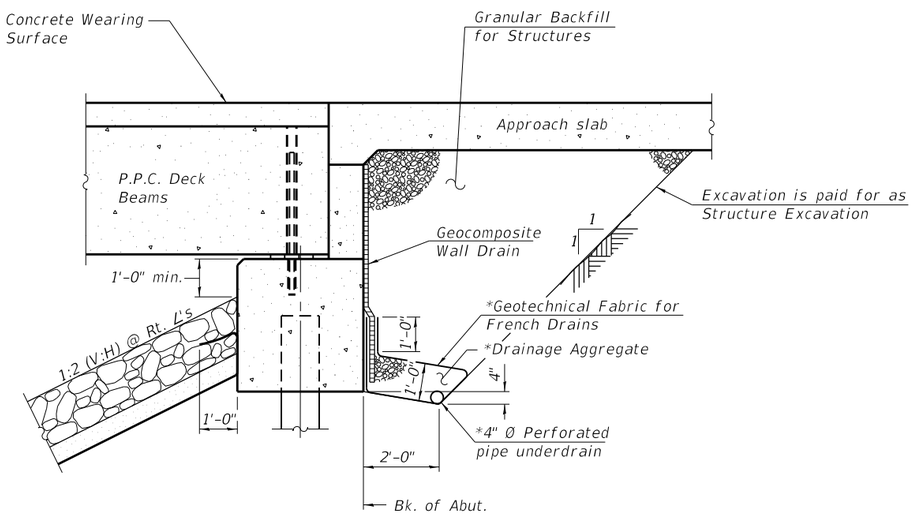

SECTION THRU ABUTMENT

(Horiz. dim. @ Rt. ∠'s)

*Included in the cost of Pipe Underdrains for Structures 4".

Note:
All drainage system components shall extend to 2'-0" from the end of each wingwall except an outlet pipe shall extend until intersecting with the side slopes. The pipes shall drain into concrete headwalls. (See Article 601.05 of the Standard Specifications and Highway Standard 601101).

GENERAL NOTES

Reinforcement bars designated (E) shall be epoxy coated.

Layout of the slope protection system may be varied to suit ground conditions in the field as directed by the Engineer.

The embankment configuration shown shall be the minimum that must be placed and compacted prior to construction of the abutments.

Protective coat shall be applied to top surface of concrete wearing surface and approach slab, and top and inside vertical faces of sidewalk and parapets, unless otherwise directed by Engineer.

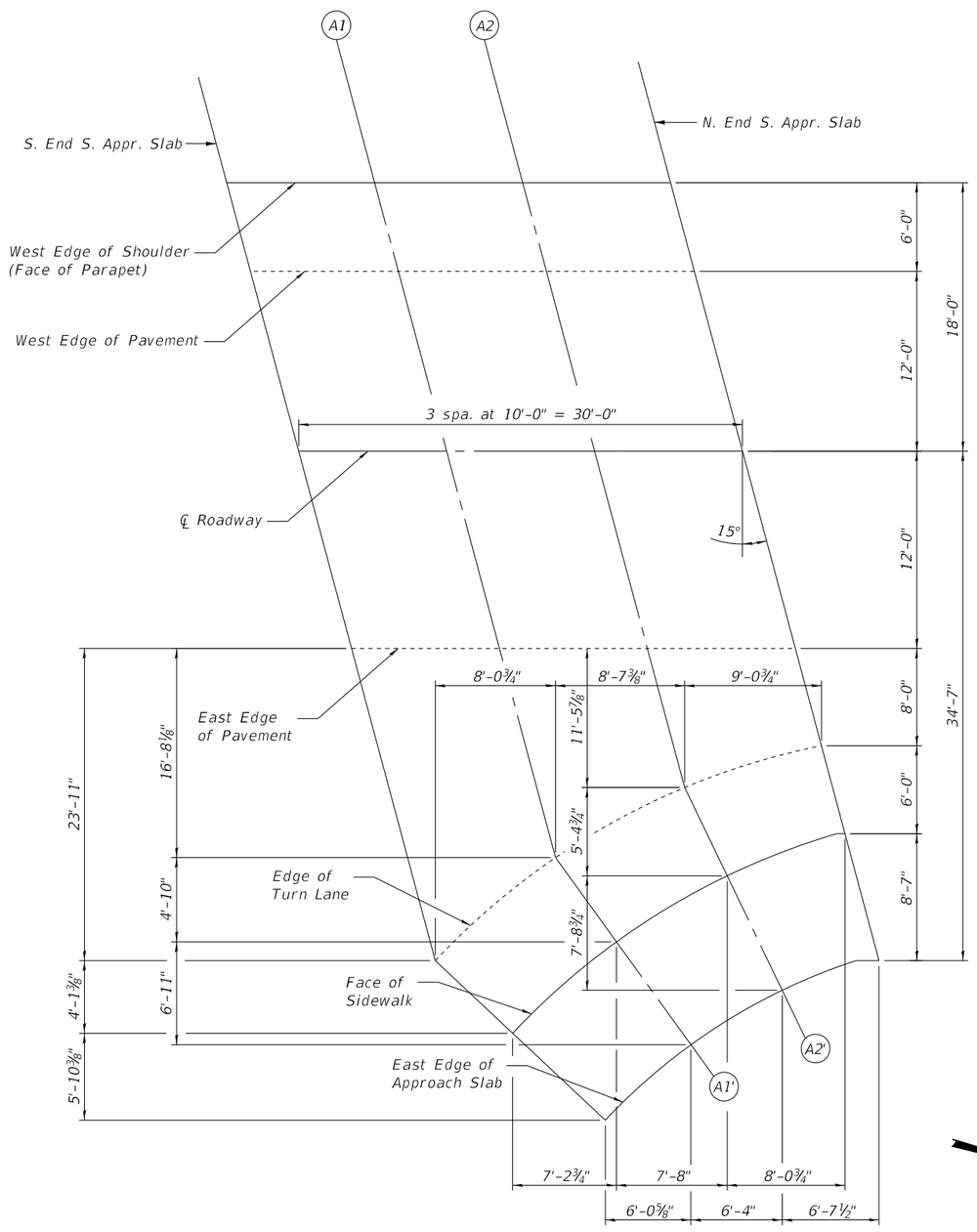

PLAN

WEST EDGE OF SHOULDER

Location	Station	Offset	Theoretical Grade Elevations
S. End S. Appr. Slab	219+46.21	-18.00	718.02
A1	219+56.21	-18.00	717.83
A2	219+66.21	-18.00	717.64
N. End S. Appr. Slab	219+76.21	-18.00	717.45

EDGE OF TURN LANE

Location	Station	Offset	Theoretical Grade Elevations
S. End S. Appr. Slab	219+60.66	35.92	717.38
A1	219+68.72	28.68	717.37
A2	219+77.33	23.49	717.32
N. End S. Appr. Slab	219+86.39	20.00	717.21

WEST EDGE OF PAVEMENT

Location	Station	Offset	Theoretical Grade Elevations
S. End S. Appr. Slab	219+47.82	-12.00	718.11
A1	219+57.82	-12.00	717.92
A2	219+67.82	-12.00	717.73
N. End S. Appr. Slab	219+77.82	-12.00	717.54

FACE OF SIDEWALK

Location	Station	Offset	Theoretical Grade Elevations
S. End S. Appr. Slab	219+65.04	40.03	717.22
A1'	219+72.27	33.51	717.21
A2'	219+79.94	28.89	717.16
N. End S. Appr. Slab	219+88.00	26.00	717.06

℄ ROADWAY

Location	Station	Offset	Theoretical Grade Elevations
S. End S. Appr. Slab	219+51.04	0.00	718.28
A1	219+61.04	0.00	718.09
A2	219+71.04	0.00	717.90
N. End S. Appr. Slab	219+81.04	0.00	717.71

EAST EDGE OF APPROACH SLAB

Location	Station	Offset	Theoretical Grade Elevations
S. End S. Appr. Slab	219+71.30	45.90	717.38
A1'	219+77.35	40.43	717.38
A2'	219+83.68	36.62	717.32
N. End S. Appr. Slab	219+90.30	34.58	717.19

EAST EDGE OF PAVEMENT

Location	Station	Offset	Theoretical Grade Elevations
S. End S. Appr. Slab	219+54.25	12.00	717.98
A1	219+64.25	12.00	717.79
A2	219+74.25	12.00	717.60
N. End S. Appr. Slab	219+84.25	12.00	717.41

Note:
Stations and Offsets are given relative to the tangent section of the alignment starting at P.C. Sta. 219+56.13. Actual Station and Offset may vary slightly relative to the curved alignment section.

MODEL: Default
FILE NAME: S:\237\2016\2371601\2.22 (Woodford Co CH 13 at Front St Ph III\CADD\CADD Sheets\1023221-003-S Appr Elev.dgn

MAURER-STUTZ ENGINEERS SURVEYORS

USER NAME = baswanson	DESIGNED - MSM	REVISED -	
	CHECKED - LVM	REVISED -	
PLOT SCALE =	DRAWN - KJA	REVISED -	
PLOT DATE = 12/2/2024	CHECKED - BAS	REVISED -	

WOODFORD COUNTY
HIGHWAY DEPARTMENT

TOP OF SOUTH APPROACH SLAB ELEVATIONS
STRUCTURE NO. 102-3221

SHEET 3 OF 18 SHEETS

F.A.S. RTE.	SECTION	COUNTY	TOTAL SHEETS	SHEET NO.
364	20-00091-03-BR	WOODFORD	114	57

CONTRACT NO. 89854

12/2/2024 8:16:29 AM

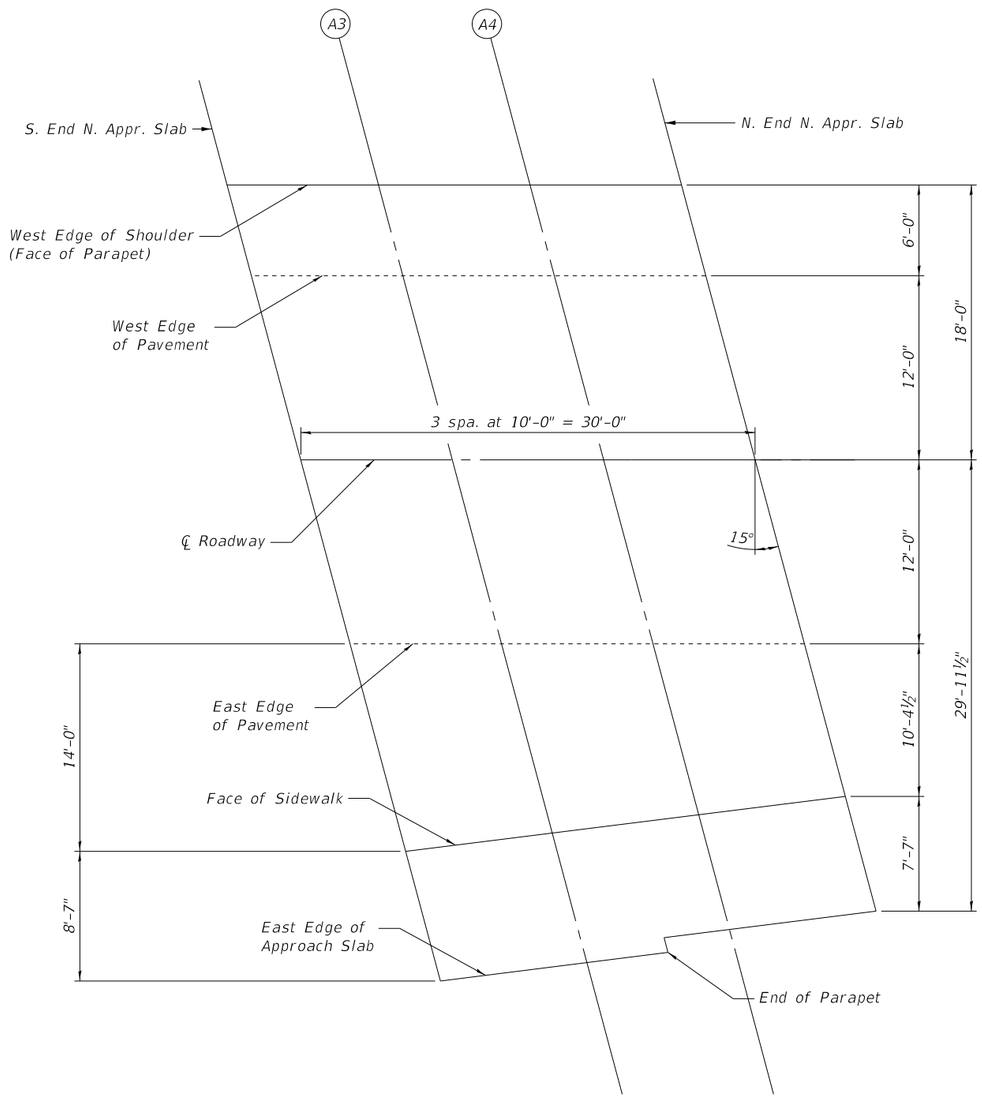

PLAN

N

WEST EDGE OF SHOULDER

Location	Station	Offset	Theoretical Grade Elevations
S. End N. Appr. Slab	220+36.14	-18.00	716.31
A3	220+46.14	-18.00	716.12
A4	220+56.14	-18.00	715.93
N. End N. Appr. Slab	220+66.14	-18.00	715.74

EAST EDGE OF PAVEMENT

Location	Station	Offset	Theoretical Grade Elevations
S. End N. Appr. Slab	220+44.18	12.00	716.27
A3	220+54.18	12.00	716.08
A4	220+64.18	12.00	715.89
N. End N. Appr. Slab	220+74.18	12.00	715.70

WEST EDGE OF PAVEMENT

Location	Station	Offset	Theoretical Grade Elevations
S. End N. Appr. Slab	220+37.75	-12.00	716.40
A3	220+47.75	-12.00	716.21
A4	220+57.75	-12.00	716.02
N. End N. Appr. Slab	220+67.75	-12.00	715.83

FACE OF SIDEWALK

Location	Station	Offset	Theoretical Grade Elevations
S. End N. Appr. Slab	220+47.93	26.00	715.92
A3	220+57.61	24.79	715.76
A4	220+67.28	23.58	715.60
N. End N. Appr. Slab	220+76.96	22.37	715.44

℄ ROADWAY

Location	Station	Offset	Theoretical Grade Elevations
S. End N. Appr. Slab	220+40.96	0.00	716.57
A3	220+50.96	0.00	716.38
A4	220+60.96	0.00	716.19
N. End N. Appr. Slab	220+70.96	0.00	716.00

EAST EDGE OF APPROACH SLAB

Location	Station	Offset	Theoretical Grade Elevations
S. End N. Appr. Slab	220+50.23	34.58	716.05
A3	220+59.90	33.35	715.89
A4	220+69.32	31.16	715.71
N. End N. Appr. Slab	220+78.99	29.96	715.55

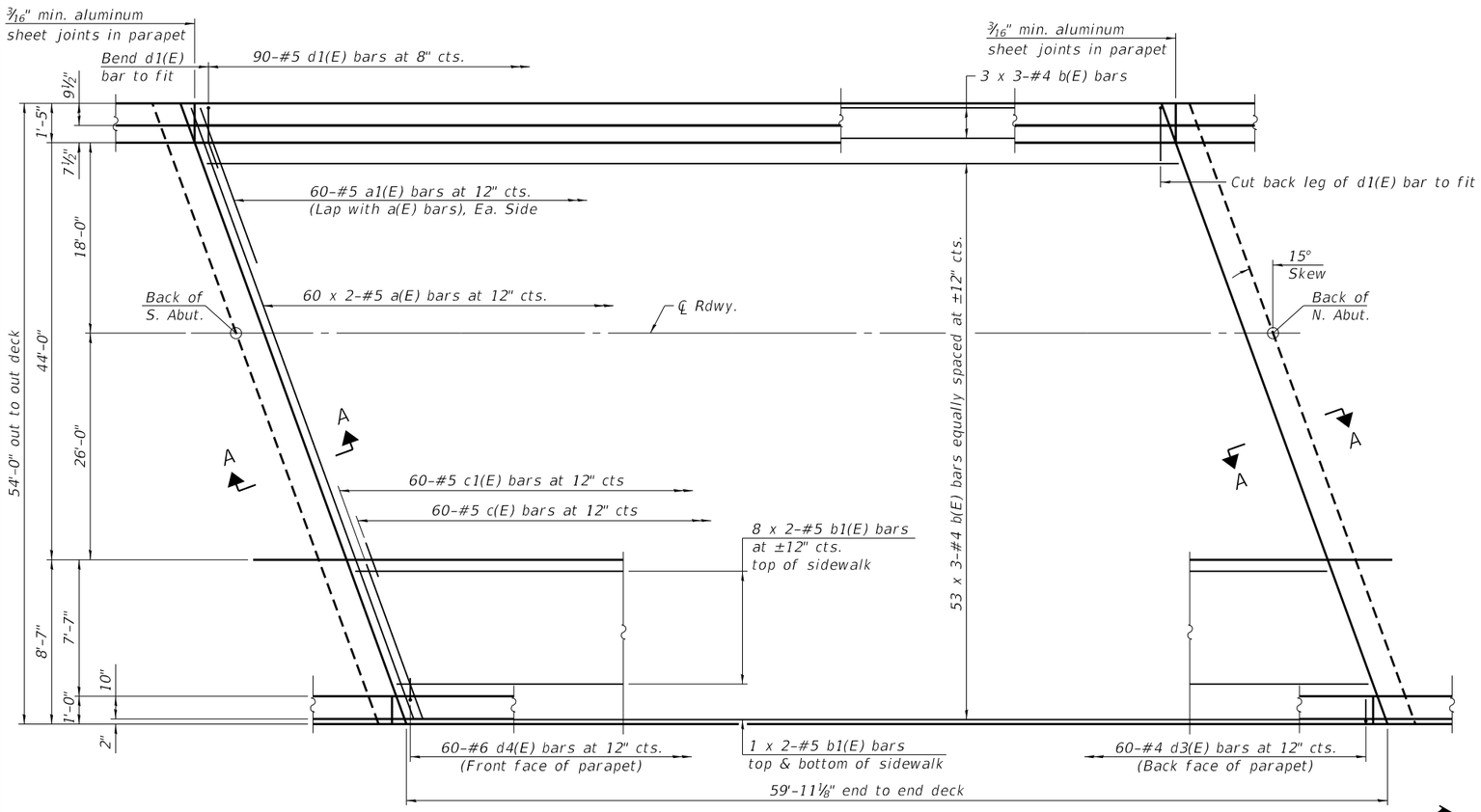

PLAN

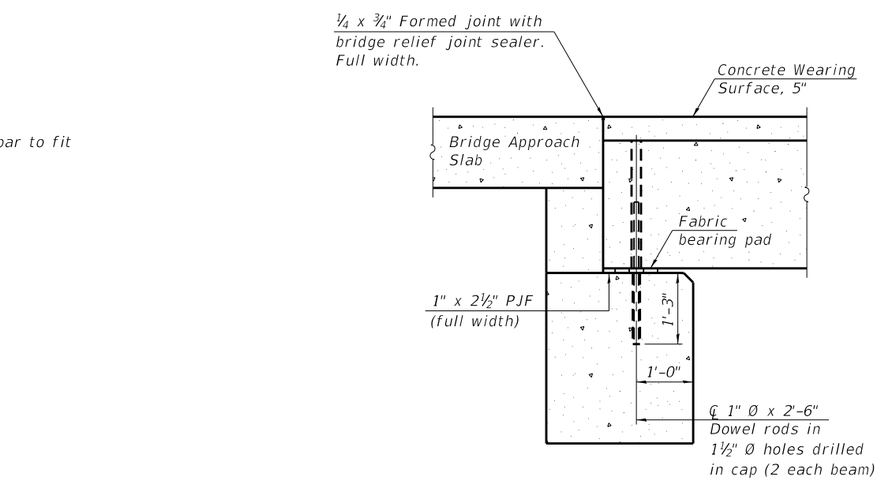

SECTION A-A

(Dimensions are at Rt. L's)

Notes:

See sheets 6 and 7 of 18 for Superstructure Details and Bill of Material.

Bars indicated thus 60 x 2-#5 etc. indicates 60 lines of bars with 2 lengths per line.

Spacing of all 'a' and 'c' bars shall be measured along the ℄ of structure.

Concrete wearing surface shall be placed prior to casting approach slab.

See sheet 9 of 18 for fabric bearing pad details.

MINIMUM BAR LAP

#4 bar = 2'-5"
#5 bar = 3'-0"

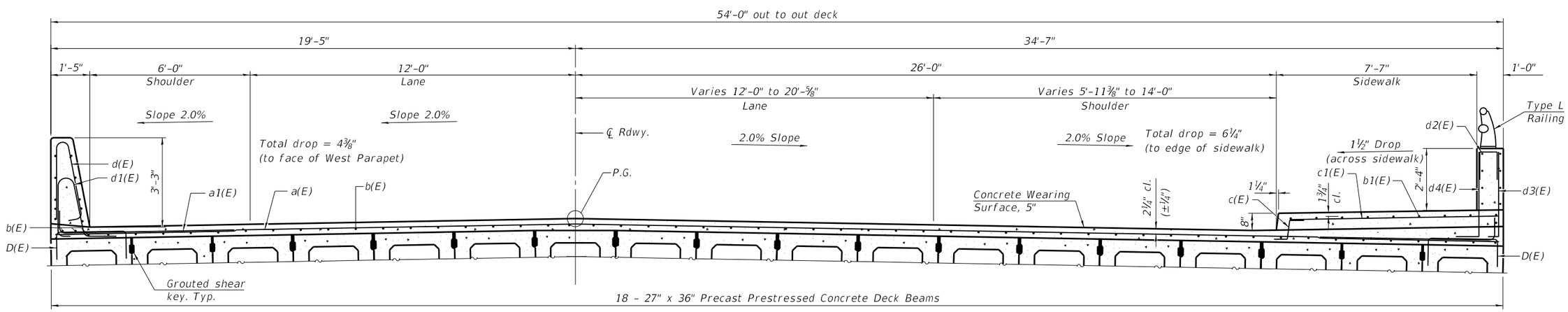

CROSS SECTION

(Looking North)

MAURER-STUTZ ENGINEERS SURVEYORS	USER NAME = baswanson	DESIGNED - MSM	REVISED -	WOODFORD COUNTY HIGHWAY DEPARTMENT	SUPERSTRUCTURE STRUCTURE NO. 102-3221	F.A.S. RTE.	SECTION	COUNTY	TOTAL SHEETS / SHEET NO.
		CHECKED - LVM	REVISED -			364	20-00091-03-BR	WOODFORD	114 / 59
	PLOT SCALE =	DRAWN - KJA	REVISED -					CONTRACT NO. 89854	
	PLOT DATE = 12/2/2024	CHECKED - BAS	REVISED -		SHEET 5 OF 18 SHEETS				

MODEL: Default
FILE NAME: S:\237\2016\2371601\2.22 (Woodford Co CH 13 at Front St Ph II)\CADD\CADD Sheets\1023221-005-Superstructure.dgn
12/2/2024 8:16:31 AM

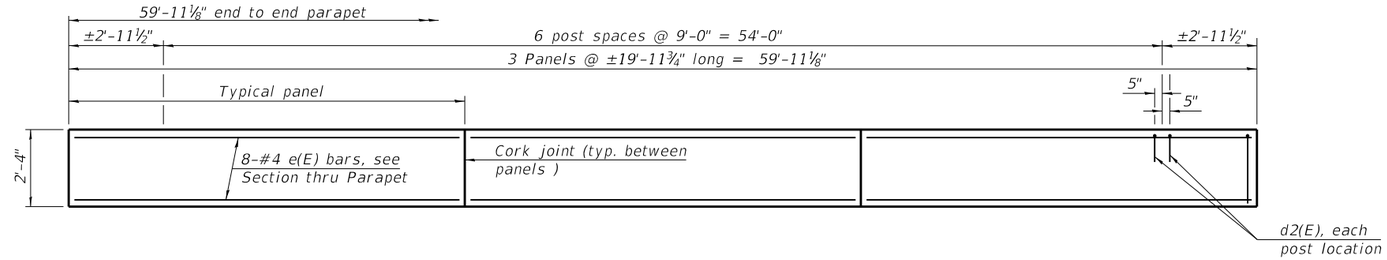

INSIDE ELEVATION OF EAST PARAPET

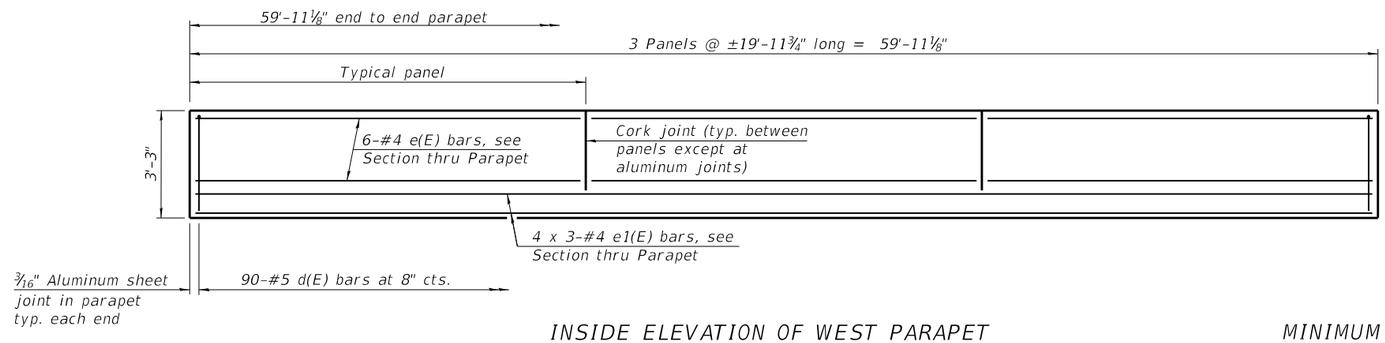

INSIDE ELEVATION OF WEST PARAPET

MINIMUM BAR LAP

#4 bar = 2'-5"

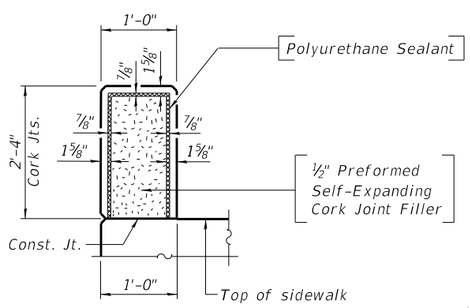

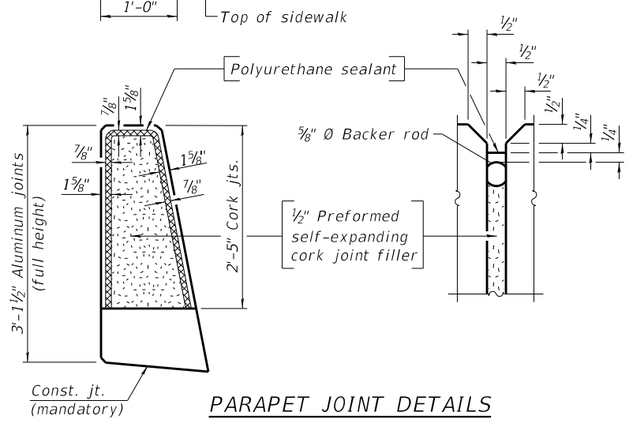

PARAPET JOINT DETAILS

Notes:

The 3/16" Aluminum sheet shall be ASTM B 209 alloy 3003-H14 and coated with 5 mils of either bitumen paint or epoxy paint to minimize reaction with wet concrete. Cost included with Concrete Superstructure.

The Polyurethane Sealant shall be according to Article 1050.04 of the Std. Spec. and the color shall be gray.

See sheet 7 of 18 for sections thru parapets and Bill of Material.

Bars indicated thus 4 x 3-#4 etc. indicates 4 lines of bars with 3 lengths per line.

See sheet 14 or 18 for railing post details.

(Sheet 1 of 2)

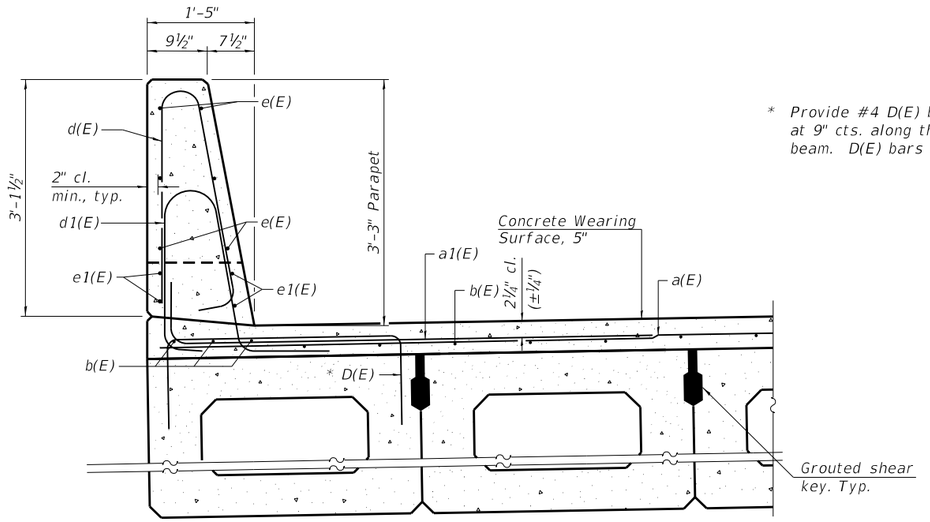

SECTION THRU WEST PARAPET

* Provide #4 D(E) bars in beams under parapets at 9" cts. along the skew projecting 3" above beam. D(E) bars included in cost of beam.

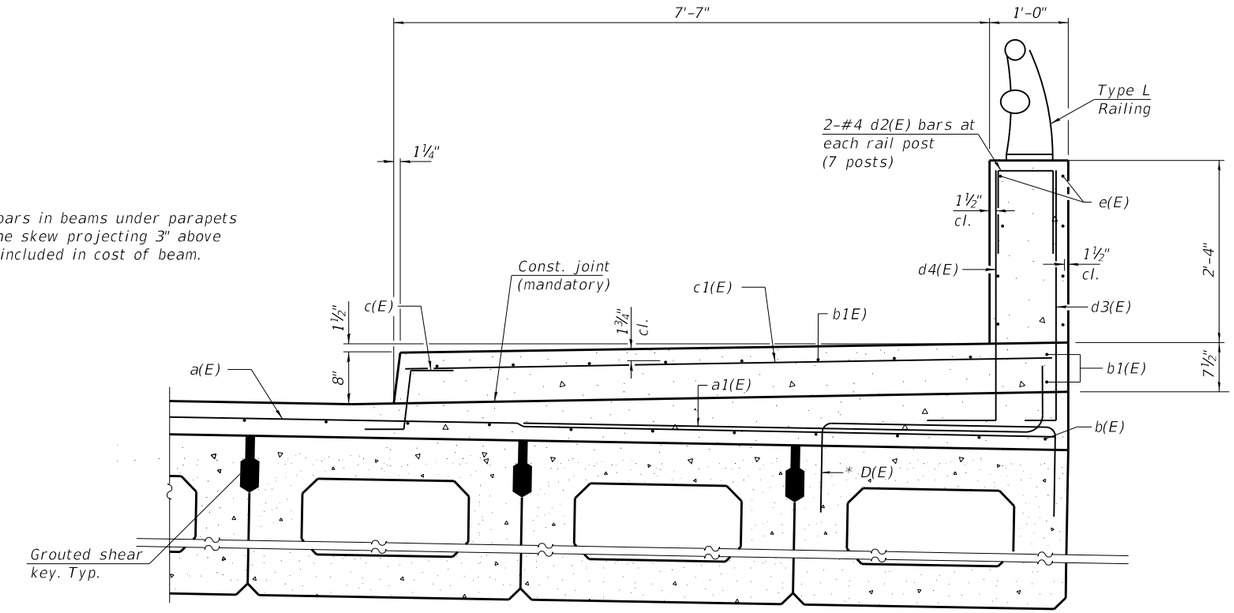

SECTION THRU EAST PARAPET

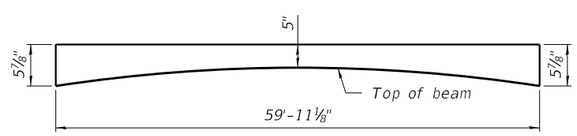

ANTICIPATED CONCRETE WEARING SURFACE PROFILE

(For information only)

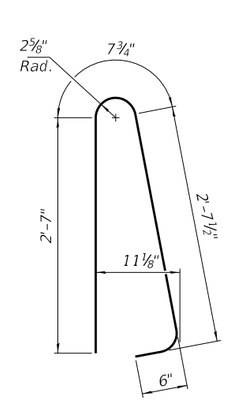

BAR d(E)

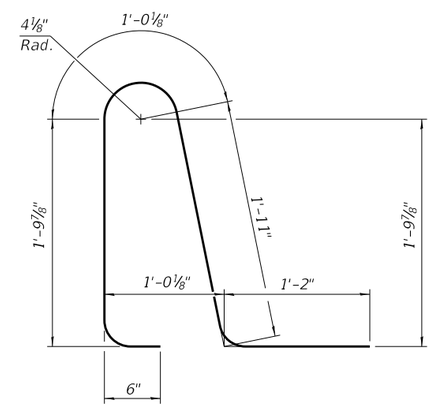

BAR d1(E)

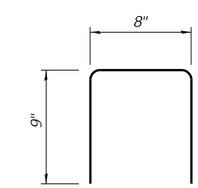

BAR d2(E)

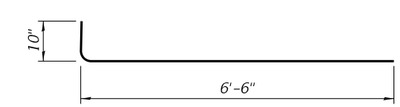

BAR a1(E)

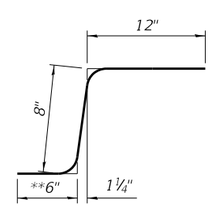

BAR c(E)

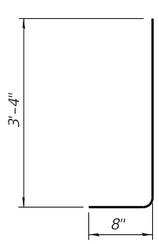

BAR d3(E)

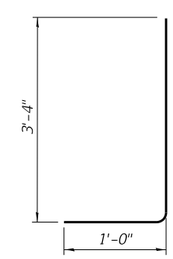

BAR d4(E)

** In lieu of bottom leg, c(E) bars may be drilled and set according to Article 509.06 of the Standard Specifications. Cored holes shall be roughened or scored per manufacturer's recommendations. Maximum depth of cored hole shall not exceed 5".

SUPERSTRUCTURE BILL OF MATERIAL

Bar	No.	Size	Length	Shape
a(E)	120	#5	29'-8"	
a1(E)	120	#5	7'-4"	
b(E)	168	#4	21'-7"	
b1(E)	20	#5	31'-5"	
c(E)	60	#5	2'-2"	
c1(E)	60	#5	8'-5"	
d(E)	90	#5	6'-5"	
d1(E)	90	#5	6'-5"	
d2(E)	14	#4	2'-2"	
d3(E)	60	#4	4'-0"	
d4(E)	60	#6	4'-4"	
e(E)	42	#4	19'-8"	
e1(E)	12	#4	21'-7"	
Reinforcement Bars, Epoxy Coated			Pound	10870
Concrete Superstructure			Cu. Yd.	24.5
Concrete Wearing Surface, 5"			Sq. Yd.	364

Note:
Parapet and sidewalk concrete shall be paid for as Concrete Superstructure.

(Sheet 2 of 2)

MODEL: Default
FILE NAME: S:\237\2016\2371601\2.22 (Woodford Co CH 13 at Front St Ph III\CADD\CADD Sheets\102-3221-007-Superstructure Details.dgn

MAURER-STUTZ ENGINEERS SURVEYORS

USER NAME = baswanson	DESIGNED - MSM	REVISED -	
	CHECKED - LVM	REVISED -	
PLOT SCALE =	DRAWN - KJA	REVISED -	
PLOT DATE = 12/2/2024	CHECKED - BAS	REVISED -	

WOODFORD COUNTY
HIGHWAY DEPARTMENT

SUPERSTRUCTURE DETAILS
STRUCTURE NO. 102-3221

SHEET 7 OF 18 SHEETS

F.A.S. RTE.	SECTION	COUNTY	TOTAL SHEETS	SHEET NO.
364	20-00091-03-BR	WOODFORD	114	61
		CONTRACT NO. 89854		

12/2/2024 8:16:34 AM

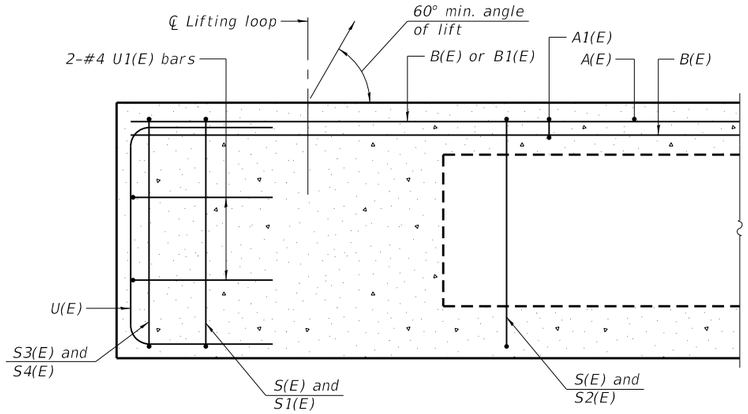

SECTION A-A

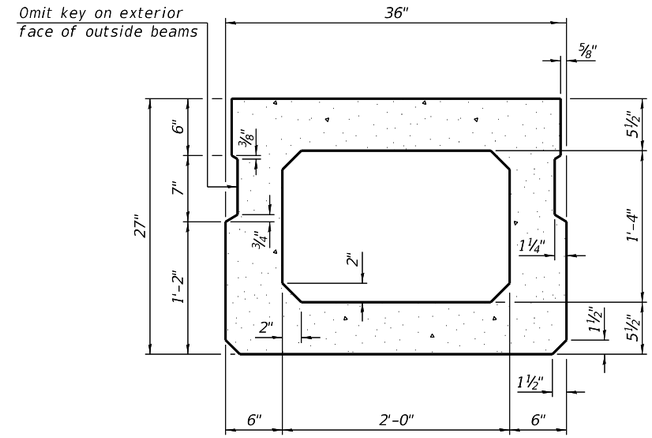

SECTION B-B
(Showing dimensions)

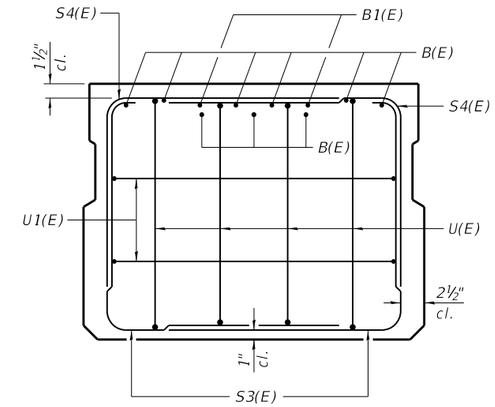

VIEW C-C

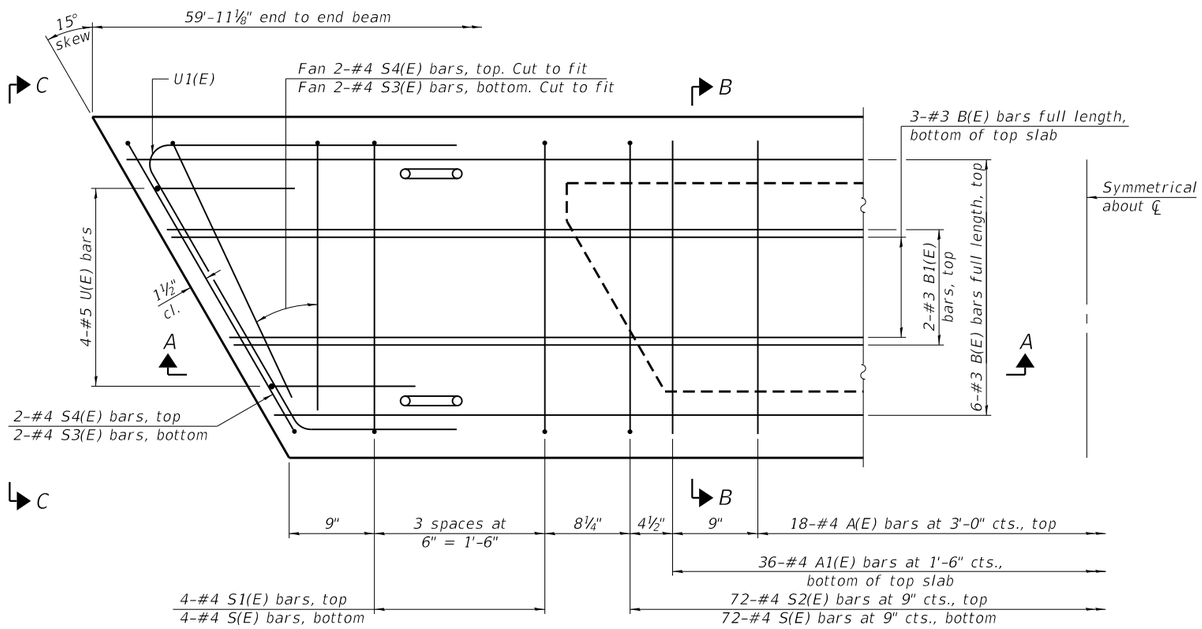

PLAN VIEW

Note:
Spacing of S(E) and S2(E) bars may be adjusted up to 4" in the immediate area of the transverse tie diaphragms to miss the block outs for the transverse ties.

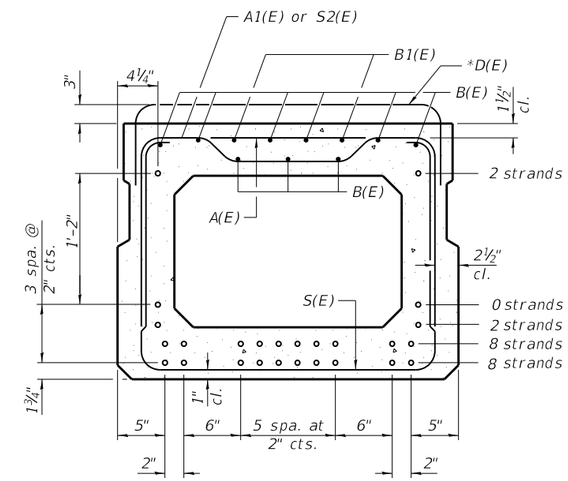

SECTION B-B
(Showing reinforcement and permissible strand locations)

Note:
Place the number of strands specified in each row symmetrically about the centerline of beam in the permissible strand locations shown.

* Exterior beams only, see sheet 7 of 18 for details.

BAR LIST
ONE BEAM ONLY
(For information only)

	Bar	No.	Size	Length	Shape
	A(E)	18	#4	2'-7"	—
	A1(E)	36	#4	2'-10"	~
	B(E)	27	#3	20'-11"	—
	B1(E)	4	#3	10'-0"	—
*	D(E)	80	#4	4'-8"	⊓
	S(E)	80	#4	7'-5"	⊔
	S1(E)	8	#4	5'-11"	⊓
	S2(E)	72	#4	6'-2"	⊓
	S3(E)	8	#4	5'-0"	⌋
	S4(E)	8	#4	4'-3"	⌋
	U(E)	8	#5	4'-6"	⊏
	U1(E)	4	#4	5'-9"	⊏

Note:
See sheet 9 of 18 for additional details and Bill of Material.

MINIMUM BAR LAP
#3 bar = 1'-6"

PD-2736-R 5-15-2023

MODEL: Default
FILE NAME: S:\237\2016\2371601\2.22 (Woodford Co CH 13 at Front St Ph III\CADD\CADD Sheets\1023221-008-PPC Deck Beam.dgn
12/2/2024 8:16:34 AM

MAURER-STUTZ ENGINEERS SURVEYORS

USER NAME = baswanson	DESIGNED - MSM	REVISED -	
	CHECKED - LVM	REVISED -	
PLOT SCALE =	DRAWN - KJA	REVISED -	
PLOT DATE = 12/2/2024	CHECKED - BAS	REVISED -	

WOODFORD COUNTY
HIGHWAY DEPARTMENT

27" x 36" PPC DECK BEAM
STRUCTURE NO. 102-3221

SHEET 8 OF 18 SHEETS

F.A.S. RTE.	SECTION	COUNTY	TOTAL SHEETS	SHEET NO.
364	20-00091-03-BR	WOODFORD	114	62
		CONTRACT NO. 89854		

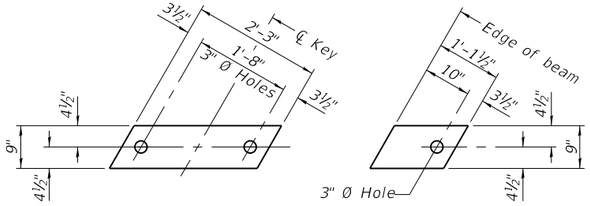

FABRIC BEARING PAD (Interior)

FABRIC BEARING PAD (Exterior)

FIXED

Notes:
All bearing pads shall be 1" thick.
Omit holes when using expansion bearings.
Expansion bearing pads shall be bonded to the substructure.

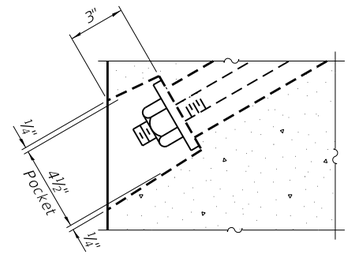

SECTION A-A

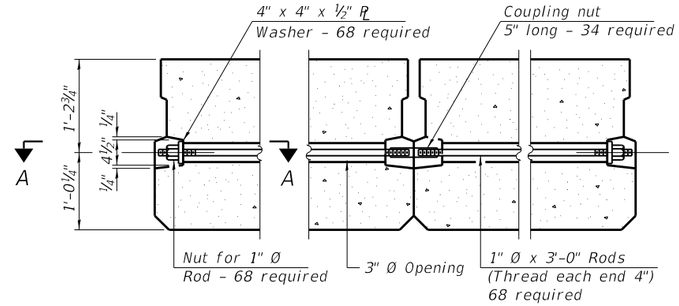

TYPICAL TRANSVERSE TIE ASSEMBLY

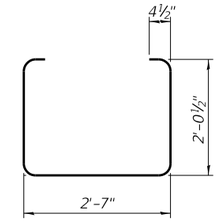

BAR S(E)

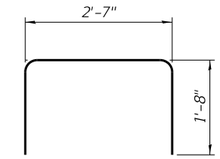

BAR S1(E)

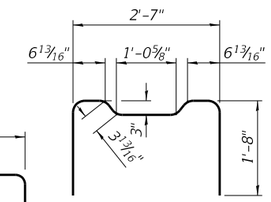

BAR S2(E)

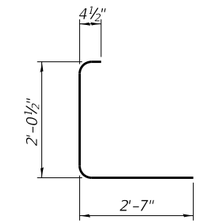

BAR S3(E)

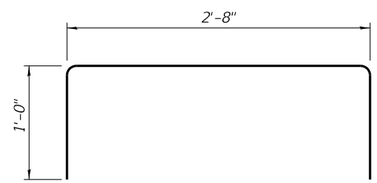

BAR D(E)

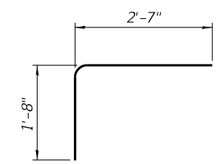

BAR S4(E)

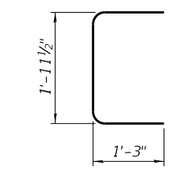

BAR U(E)

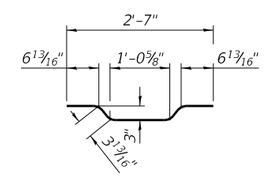

BAR A1(E)

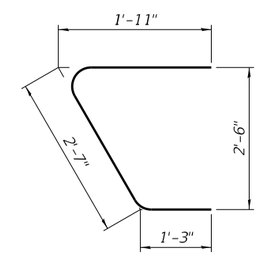

BAR U1(E)

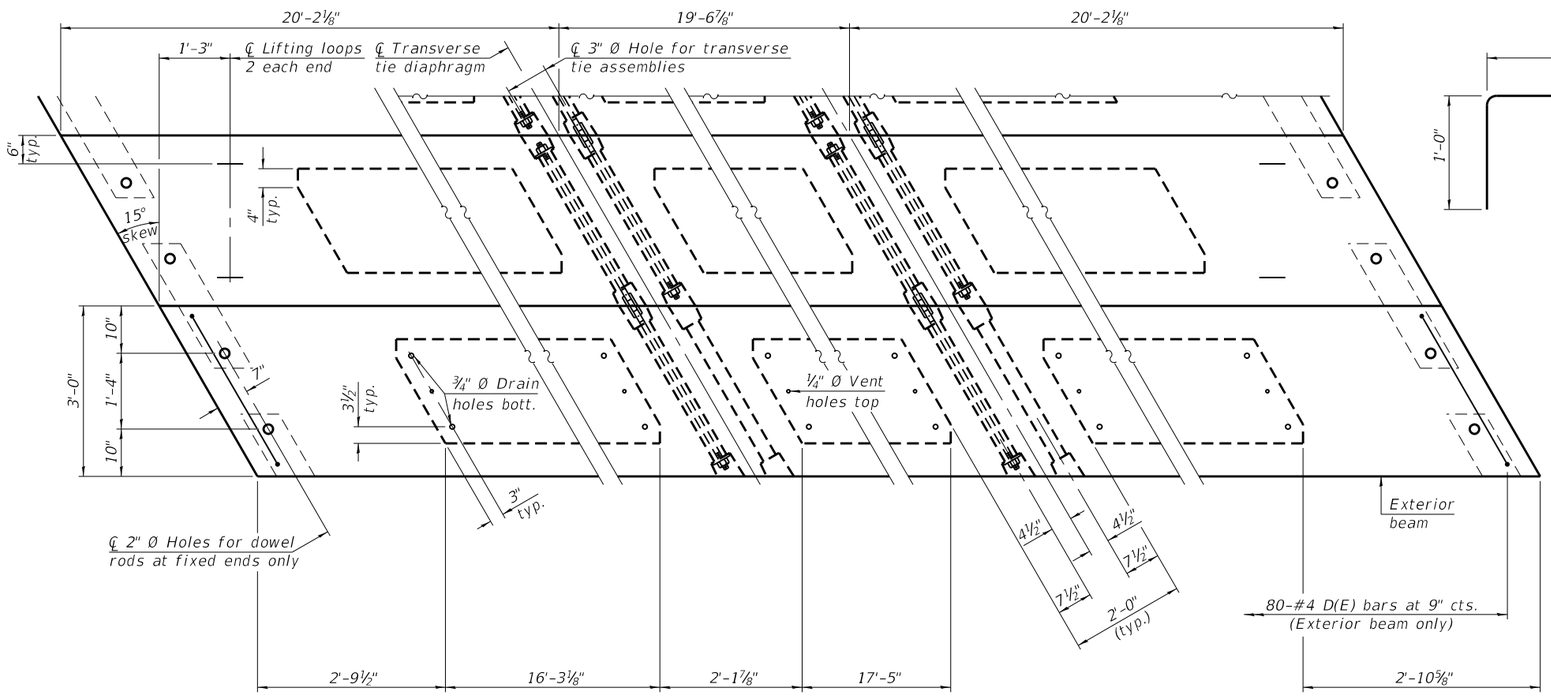

PLAN VIEW

Note:
Connect beams in pairs with the transverse tie configuration shown.

NOTES

Prestressing steel shall be uncoated high strength, low relaxation 7-wire strand, Grade 270. The nominal diameter shall be ½" and the nominal cross-sectional area shall be 0.153 sq. in.

The 1" Ø rods in the transverse tie assembly shall be tightened to a snug fit and the threads set. Pockets on exterior faces of bridge shall be filled with grout after transverse tie assembly is in place.

Two ⅛" fabric adjusting shims of the dimensions of the exterior bearing pad shall be provided for each bearing pad location.

A minimum 2½" Ø lifting pin shall be used to engage the lifting loops during handling.

Corrosion Inhibitor, per Article 1020.05(b)(10) and 1021.07 of the Standard Specifications, shall be used in the concrete for precast prestressed concrete deck beams.

Compressive strength of prestressed concrete, f'c, shall be 6000 psi.

Compressive strength of prestressed concrete at release, f'ci, shall be 5000 psi.

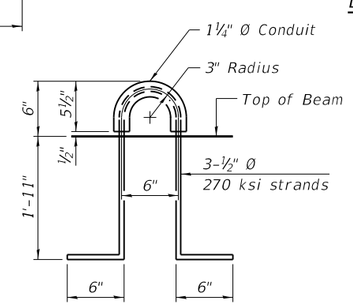

LIFTING LOOP DETAIL

BILL OF MATERIAL

Precast Prestressed Conc. Deck Bms. (27" depth)	Sq. Ft.	3236

MODEL: Default
FILE NAME: S:\237\2016\2371601\2.22 (Woodford Co CH 13 at Front St Ph III\CADD\CADD Sheets\10232221-009-PPC Deck Beam Details.dgn
12/2/2024 8:16:35 AM

MAURER-STUTZ ENGINEERS SURVEYORS

USER NAME = baswanson	DESIGNED - MSM	REVISED -	
	CHECKED - LVM	REVISED -	
PLOT SCALE =	DRAWN - KJA	REVISED -	
PLOT DATE = 12/2/2024	CHECKED - BAS	REVISED -	

WOODFORD COUNTY HIGHWAY DEPARTMENT

27" x 36" PPC DECK BEAM DETAILS
STRUCTURE NO. 102-3221

SHEET 9 OF 18 SHEETS

F.A.S. RTE.	SECTION	COUNTY	TOTAL SHEETS	SHEET NO.
364	20-00091-03-BR	WOODFORD	114	63
		CONTRACT NO. 89854		

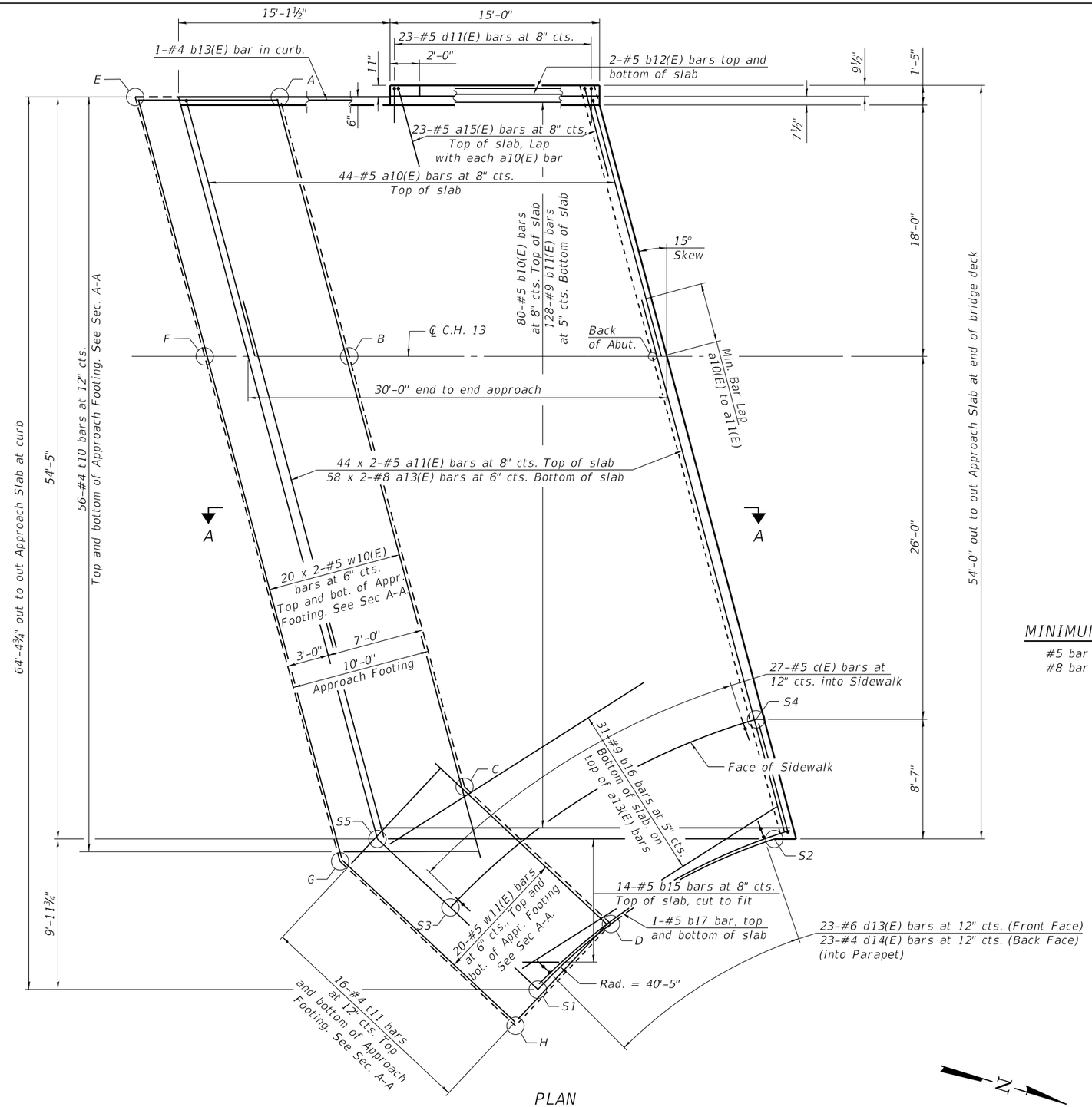

PLAN
(Showing Slab & Appr. Footing)

ELEVATIONS AND LOCATIONS FOR SOUTH APPROACH FOOTING

		* Location		Elevation	
	Point	Station	Offset	Top	Bottom
**	A	219+53.33	18.50' LT	716.62	715.79
	B	219+58.28	0.00'	716.90	716.07
	C	219+66.91	32.18' RT	716.09	715.26
	D	219+76.44	41.12' RT	715.73	714.90
**	E	219+42.97	18.50' LT	716.82	715.99
**	F	219+47.93	0.00'	717.09	716.26
	G	219+57.98	37.53' RT	716.15	715.32
	H	219+69.60	48.42' RT	715.71	714.88

ELEVATIONS AND LOCATIONS FOR SOUTH APPROACH SLAB

	* Location		Elevation	
Point	Station	Offset	Top	Bottom
S1	219+71.30	45.90' RT	717.38	715.73
S2	219+88.73	34.58' RT	717.22	715.62
S3	219+65.04	40.03' RT	717.22	715.97
S4	219+87.43	26.00' RT	717.07	715.82
S5	219+60.66	35.92' RT	717.38	716.13

* Station and Offset are shown relative to ℄ C.H. 13

** Station and Offset are given relative to the tangent section of the alignment starting at P.C. Sta. 219+56.13, actual Station and Offset may vary slightly relative to the curved alignment section

Notes:
See sheet 12 of 18 for cross sections and Section A-A.
See sheet 13 of 18 for parapet elevations, bar details, and Bill of Material.
Bars indicated thus 20 x 2-#5 etc. indicates 20 lines of bars with 2 lengths per line.

MINIMUM BAR LAP

#5 bar = 3'-4"
#8 bar = 4'-9"

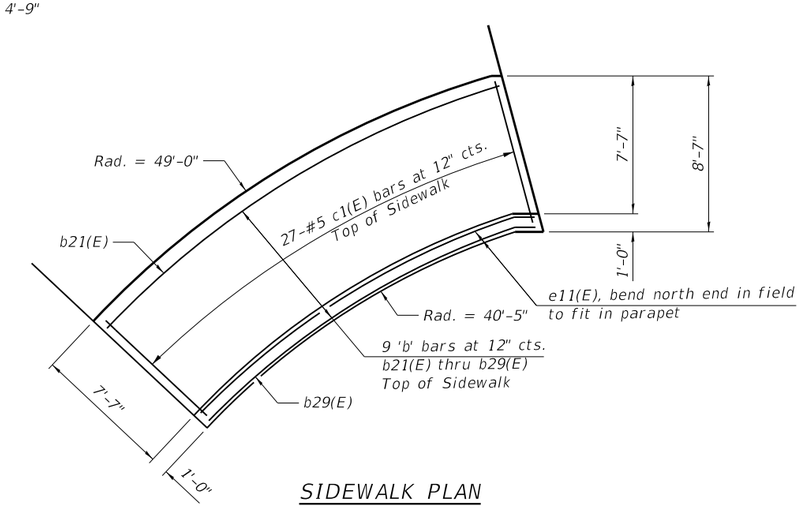

SIDEWALK PLAN
(Showing East Sidewalk & Parapet)

MODEL: Default
FILE NAME: S:\237\2016\2371612.22 (Woodford Co CH 13 at Front St Ph III)\CADD\CADD Sheets\1023221-010-S Appr Slab.dgn

MAURER-STUTZ ENGINEERS SURVEYORS

USER NAME = baswanson	DESIGNED - MSM	REVISED -	
	CHECKED - LVM	REVISED -	
PLOT SCALE =	DRAWN - KJA	REVISED -	
PLOT DATE = 12/2/2024	CHECKED - BAS	REVISED -	

WOODFORD COUNTY HIGHWAY DEPARTMENT

SOUTH BRIDGE APPROACH SLAB STRUCTURE NO. 102-3221

SHEET 10 OF 18 SHEETS

F.A.S. RTE.	SECTION	COUNTY	TOTAL SHEETS	SHEET NO.
364	20-00091-03-BR	WOODFORD	114	64
		CONTRACT NO. 89854		

12/2/2024 8:16:36 AM

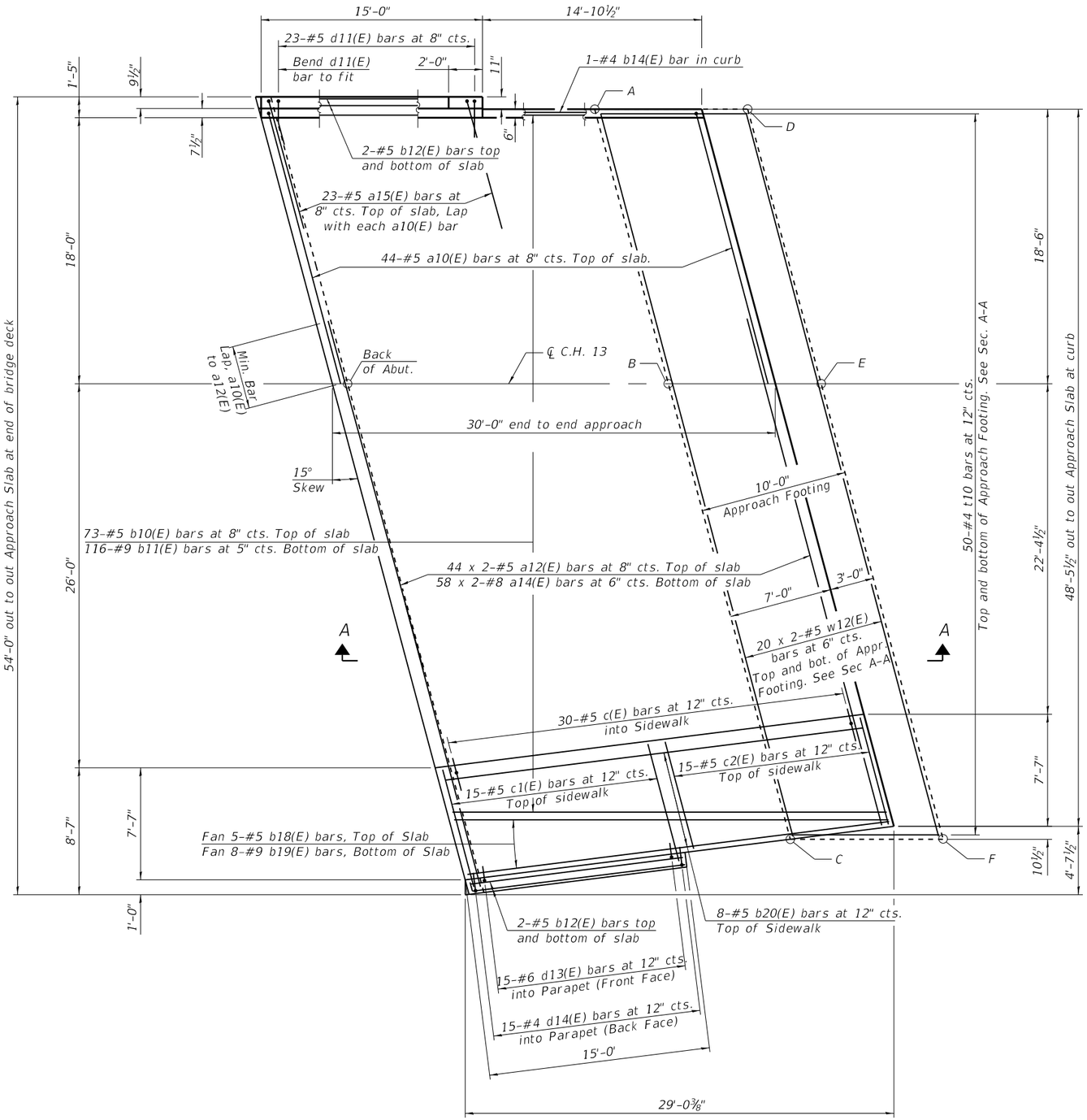

PLAN

TOP AND BOTTOM ELEVATIONS FOR NORTH APPROACH FOOTING

Point	Top	Bottom
A	714.62	713.79
B	714.89	714.06
C	714.12	713.29
D	714.42	713.59
E	714.70	713.87
F	713.92	713.09

MINIMUM BAR LAP

#5 bar = 3'-4"
#8 bar = 4'-9"

Notes:

See sheet 12 of 18 for cross sections and Section A-A.

See sheet 13 of 18 for parapet elevations, bar details, and Bill of Material.

Bars indicated thus 20 x 2-#5 etc. indicates 20 lines of bars with 2 lengths per line.

MODEL: Default
FILE NAME: S:\237\2016\2371612.22 (Woodford Co CH 13 at Front St Ph III)\CADD\CADD Sheets\1023221-011-N Appr Slab.dgn
12/2/2024 8:16:37 AM

MAURER-STUTZ ENGINEERS SURVEYORS

USER NAME = baswanson	DESIGNED - MSM	REVISED -	
	CHECKED - LVM	REVISED -	
PLOT SCALE =	DRAWN - KJA	REVISED -	
PLOT DATE = 12/2/2024	CHECKED - BAS	REVISED -	

WOODFORD COUNTY
HIGHWAY DEPARTMENT

NORTH BRIDGE APPROACH SLAB
STRUCTURE NO. 102-3221

SHEET 11 OF 18 SHEETS

F.A.S. RTE.	SECTION	COUNTY	TOTAL SHEETS	SHEET NO.
364	20-00091-03-BR	WOODFORD	114	65
		CONTRACT NO. 89854		

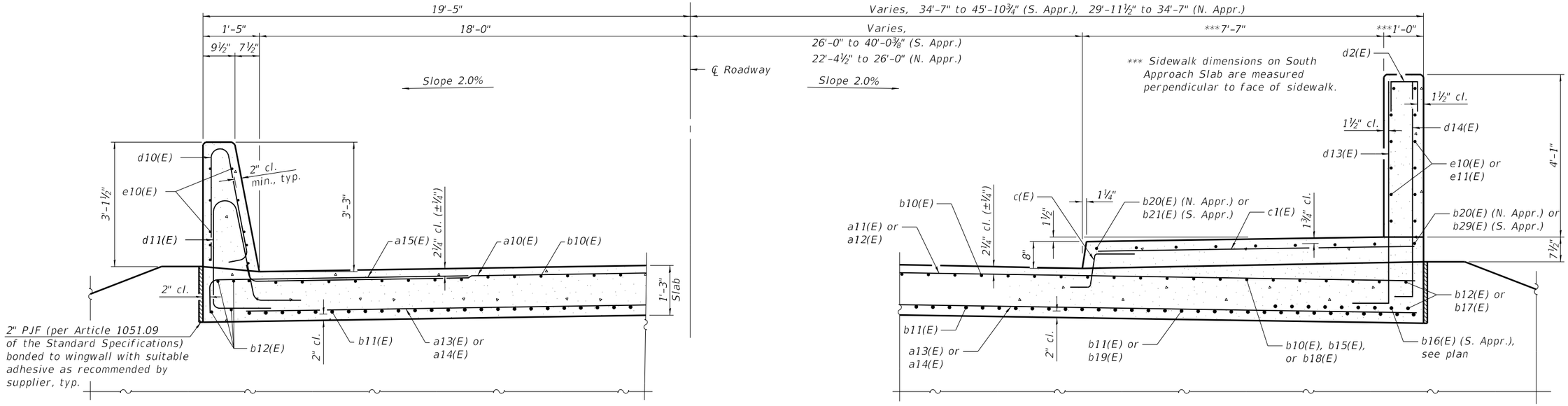

CROSS SECTION - NEAR ABUTMENT

(Looking North)

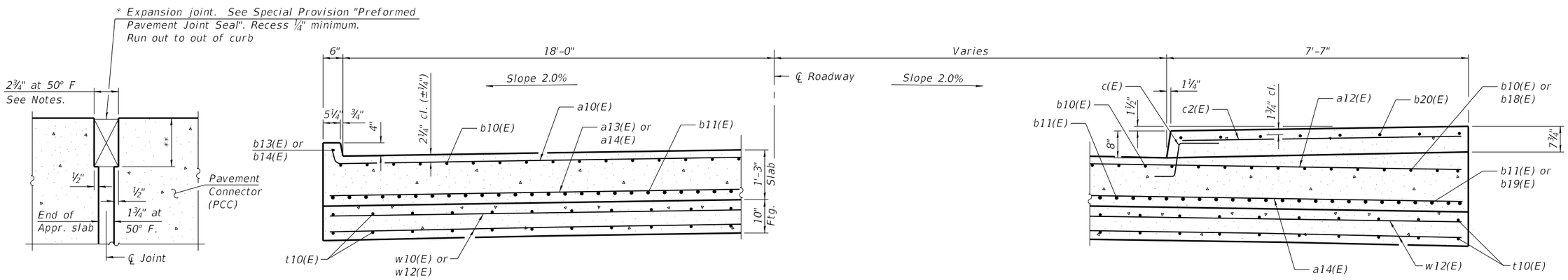

DETAIL A

(at Rt. ∠'s)

CROSS SECTION - AT APPROACH FOOTING

(Looking North)

* Cost included with Concrete Superstructure (Approach Slab).

** Per manufacturer recommendations

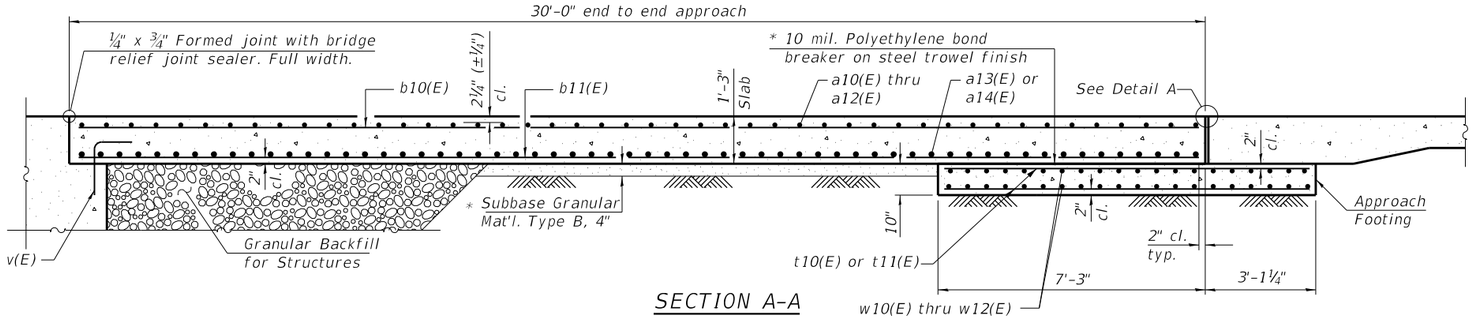

SECTION A-A

Notes:

The joint opening shall be adjusted for temperature per Article 520.04 of the Standard Specifications. However, since this detail is for jointless structures, the length of bridge used to calculate the adjustment shall be equal to half the total bridge length plus the length of the bridge approach slab.

Parapet and sidewalk concrete shall be paid for as Concrete Superstructure.

Approach slab shall be paid for as Concrete Superstructure (Approach Slab).

Approach footing concrete shall be paid for as Concrete Structures.

The approach footing maximum applied service bearing pressure (Qmax) = 2.0 ksf.

Cost of excavation for approach footing included with Concrete Structures.

For Granular Backfill for Structures and drainage treatment details, see sheet 2 of 18.

See sheet 13 of 18 for parapet elevations, bar details, and Bill of Material.

See sheet 10 or 11 of 18 for appropriate plan view.

(Sheet 1 of 2)

MODEL: Default
FILE NAME: S:\237\2016\23716012.22 (Woodford Co CH 13 at Front St Ph II)\CADD\CADD Sheets\1023221-012-Appr Slab Details.dgn
12/2/2024 8:16:39 AM

MAURER-STUTZ ENGINEERS SURVEYORS	USER NAME = baswanson	DESIGNED - MSM	REVISED -	WOODFORD COUNTY HIGHWAY DEPARTMENT	BRIDGE APPROACH SLAB DETAILS STRUCTURE NO. 102-3221
		CHECKED - LVM	REVISED -		
	PLOT SCALE =	DRAWN - KJA	REVISED -		
	PLOT DATE = 12/2/2024	CHECKED - BAS	REVISED -		SHEET 12 OF 18 SHEETS

F.A.S. RTE.	SECTION	COUNTY	TOTAL SHEETS	SHEET NO.
364	20-00091-03-BR	WOODFORD	114	66
		CONTRACT NO. 89854		

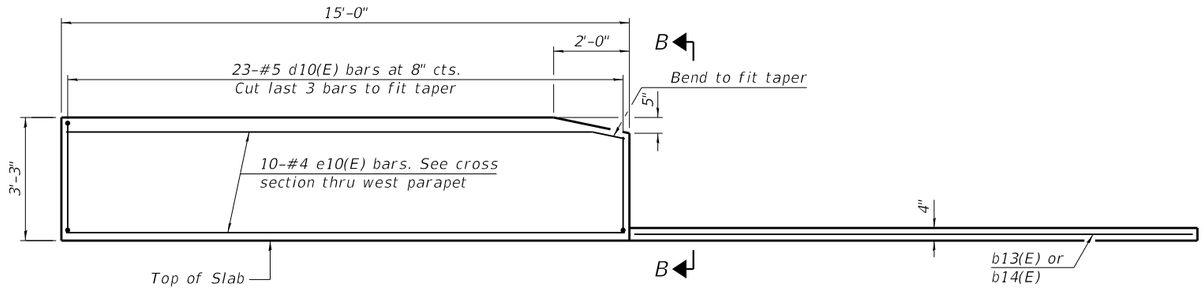

INSIDE ELEVATION OF WEST PARAPET AND CURB

(North Approach shown, South Approach opposite)

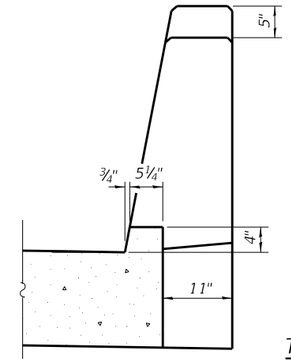

VIEW B-B

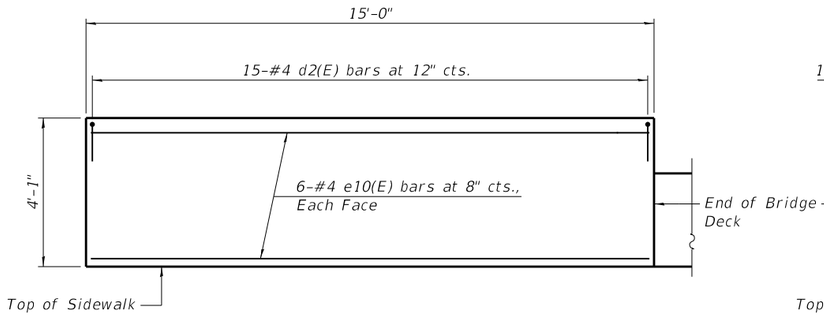

INSIDE ELEVATION OF EAST PARAPET (NORTH APPROACH)

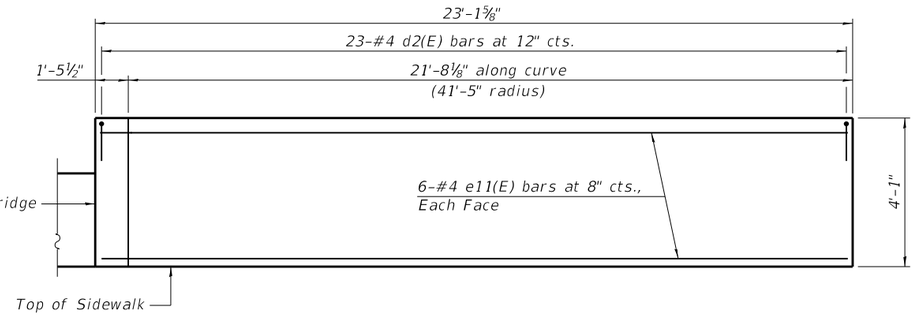

INSIDE ELEVATION OF EAST PARAPET (SOUTH APPROACH)

TWO APPROACHES BILL OF MATERIAL

Bar	No.	Size	Length	Shape
a10(E)	88	#5	19'-4"	
a11(E)	88	#5	26'-10"	
a12(E)	88	#5	20'-8"	
a13(E)	116	#8	35'-6"	
a14(E)	116	#8	29'-2"	
a15(E)	46	#5	7'-4"	
b10(E)	153	#5	29'-8"	
b11(E)	244	#9	29'-8"	
b12(E)	12	#5	14'-6"	
b13(E)	1	#4	14'-9"	
b14(E)	1	#4	14'-6"	
b15(E)	14	#5	26'-6"	
b16(E)	31	#9	22'-0"	
b17(E)	2	#5	22'-4"	
b18(E)	5	#5	28'-9"	
b19(E)	8	#9	28'-9"	
b20(E)	8	#5	28'-9"	
b21(E)	1	#5	26'-9"	
b22(E)	1	#5	26'-2"	
b23(E)	1	#5	25'-8"	
b24(E)	1	#5	25'-1"	
b25(E)	1	#5	24'-6"	
b26(E)	1	#5	24'-0"	
b27(E)	1	#5	23'-5"	
b28(E)	1	#5	22'-10"	
b29(E)	1	#5	22'-4"	
c(E)	57	#5	2'-4"	
c1(E)	42	#5	8'-2"	
c2(E)	15	#5	7'-2"	
d2(E)	38	#4	2'-0"	
d10(E)	46	#5	6'-5"	
d11(E)	46	#5	8'-6"	
d13(E)	38	#6	6'-6"	
d14(E)	38	#4	5'-10"	
e10(E)	32	#4	14'-8"	
e11(E)	12	#4	22'-4"	
t10(E)	212	#4	10'-0"	
t11(E)	32	#4	9'-8"	
w10(E)	80	#5	30'-8"	
w11(E)	40	#5	15'-9"	
w12(E)	80	#5	27'-1"	
Concrete Superstructure			Cu. Yd.	19.7
Concrete Superstructure (Approach Slab)			Cu. Yd.	152.9
Concrete Structures			Cu. Yd.	37.3
Reinforcement Bars, Epoxy Coated			Pound	69700

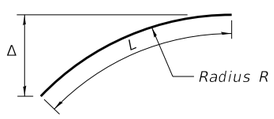

BARS b17, b21(E) thru b29(E), and e11(E)

Bar	R	L	Δ
b17(E)	40'-8"	22'-4"	6'-0"
b21(E)	48'-8"	26'-9"	7'-2"
b22(E)	47'-8"	26'-2"	7'-0"
b23E)	46'-8"	25'-8"	6'-10½"
b24E)	45'-8"	25'-1"	6'-8½"
b25E)	44'-8"	24'-6"	6'-6½"
b26E)	43'-8"	24'-0"	6'-5"
b27E)	42'-8"	23'-5"	6'-3"
b28E)	41'-8"	22'-10"	6'-1"
b29(E)	40'-8"	22'-4"	6'-0"
e11(E)	40'-8"	22'-4"	6'-0"

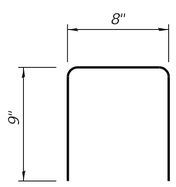

BAR d2(E)

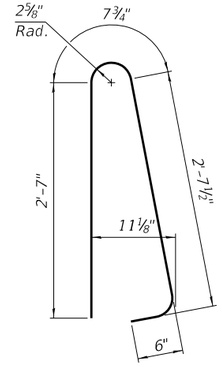

BAR d10(E)

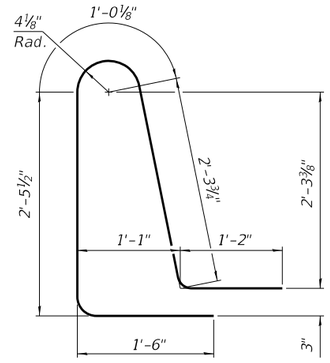

BAR d11(E)

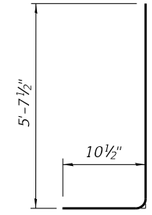

BAR d13(E)

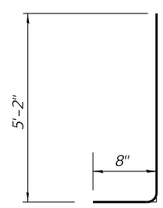

BAR d14(E)

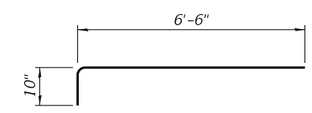

BAR a15E)

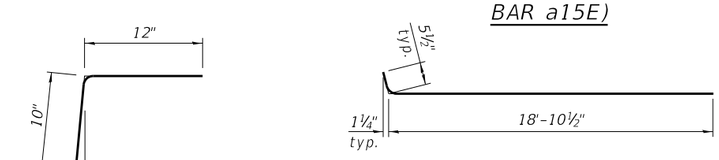

BAR a10(E)

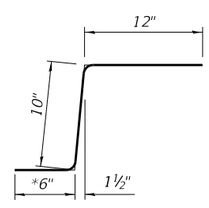

BAR c(E)

Notes:

See sheet 12 of 18 for approach cross sections including parapet and sidewalk sections.

See sheets 10 and 11 of 18 for plan views of approach slabs.

(Sheet 2 of 2)

MODEL: Default
FILE NAME: S:\237\2016\23716012.22 (Woodford Co CH 13 at Front St Ph III)\CADD\CADD Sheets\1023221-013-Appr Slab Details.dgn

MAURER-STUTZ ENGINEERS SURVEYORS

USER NAME = baswanson	DESIGNED - MSM	REVISED -	
	CHECKED - LVM	REVISED -	
PLOT SCALE =	DRAWN - KJA	REVISED -	
PLOT DATE = 12/2/2024	CHECKED - BAS	REVISED -	

WOODFORD COUNTY
HIGHWAY DEPARTMENT

BRIDGE APPROACH SLAB DETAILS
STRUCTURE NO. 102-3221

SHEET 13 OF 18 SHEETS

F.A.S. RTE.	SECTION	COUNTY	TOTAL SHEETS	SHEET NO.
364	20-00091-03-BR	WOODFORD	114	67
		CONTRACT NO. 89854		

12/2/2024 8:16:40 AM

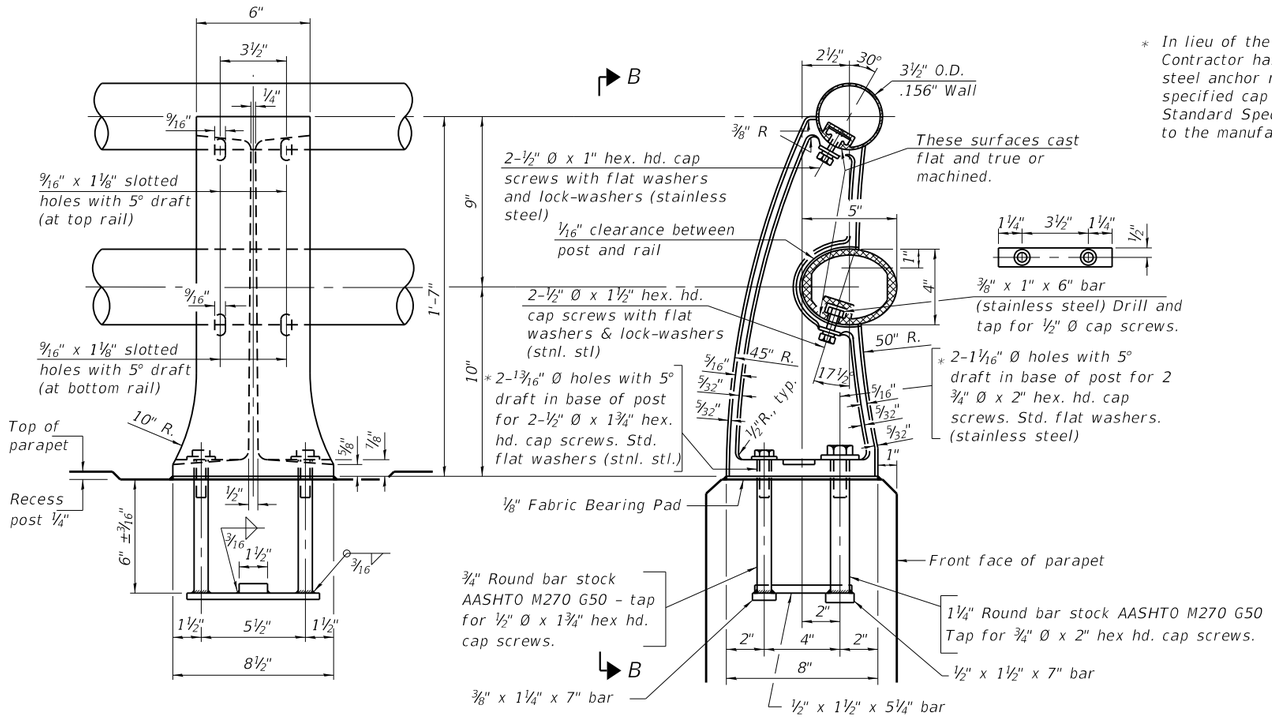

* In lieu of the cast-in-place anchor device shown, the Contractor has the option of drilling and setting stainless steel anchor rods of the same diameter and grade as the specified cap screws according to Article 509.06 of the Standard Specifications. Embedment shall be according to the manufacturer's specifications.

VIEW B-B

SECTION A-A

RAIL POST DETAILS

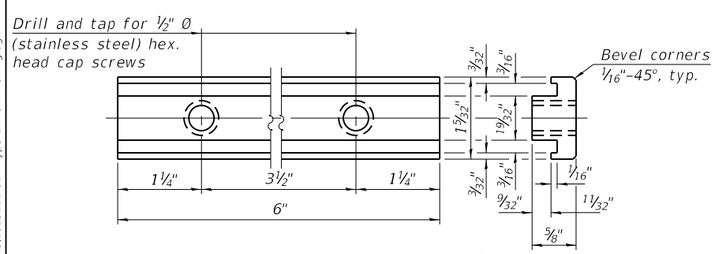

RAIL POST CLAMP BAR

For Top Rail

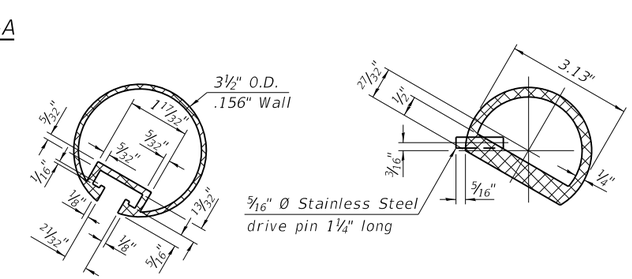

SECTION THRU TOP RAIL

SECTION THRU TOP RAIL SPLICE

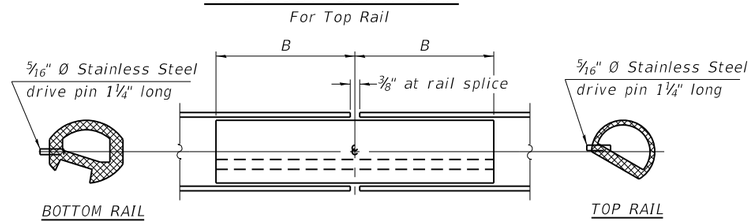

RAIL SPLICE

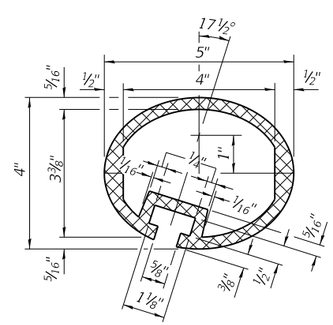

SECTION THRU BOTTOM RAIL

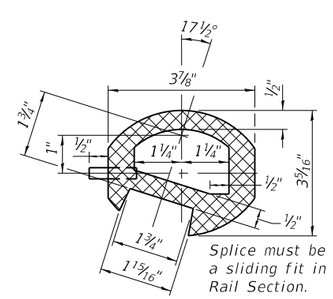

SECTION THRU BOTTOM RAIL SPLICE

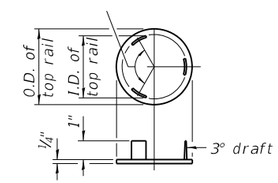

CAST END CAP

For top rail
Drive Fit Type

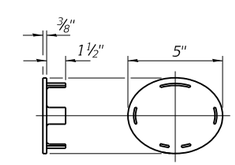

CAST END CAP

For bottom rail
Drive Fit Type

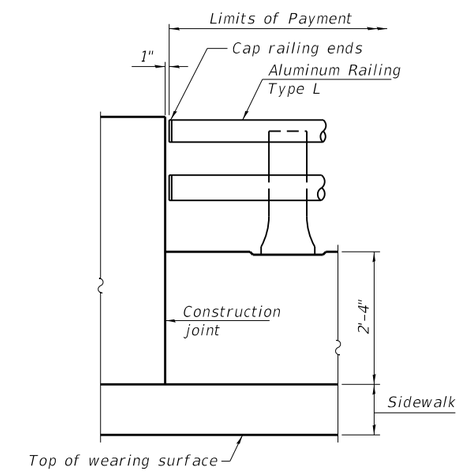

RAIL END TREATMENT

RAILING CRITERIA

NCHRP 350 Test Level	4
Post Spacing Range	7'-0" - 10'-0"
Rail Weight (plf)	40

Notes:

All Posts shall be normal to parapet.

All joints in rail shall be spliced per detail.

All exposed rail ends shall be capped per detail.

Provide 1-⅛" and 2-1/16" Aluminum Shims for 25% of the Posts. Rail elements shall be parallel to Grade, high spots shall be ground and low spots shimmed.

Place reinforcement bars to miss anchor rod locations.

See sheet 6 of 18 for rail post spacing.

BILL OF MATERIAL

Item	Unit	Quantity
Aluminum Railing, Type L	Foot	60

MODEL: Default
FILE NAME: S:\237\2016\23716012.22 (Woodford Co CH 13 at Front St Ph III)\CADD\CADD Sheets\1023221-014-Type L Alum Railing.dgn
12/2/2024 8:16:42 AM

MAURER-STUTZ ENGINEERS SURVEYORS

USER NAME = baswanson	DESIGNED - MSM	REVISED -	
	CHECKED - LVM	REVISED -	
PLOT SCALE =	DRAWN - KJA	REVISED -	
PLOT DATE = 12/2/2024	CHECKED - BAS	REVISED -	

WOODFORD COUNTY
HIGHWAY DEPARTMENT

ALUMINUM RAILING, TYPE L
STRUCTURE NO. 102-3221

SHEET 14 OF 18 SHEETS

F.A.S. RTE.	SECTION	COUNTY	TOTAL SHEETS	SHEET NO.
364	20-00091-03-BR	WOODFORD	114	68
		CONTRACT NO. 89854		

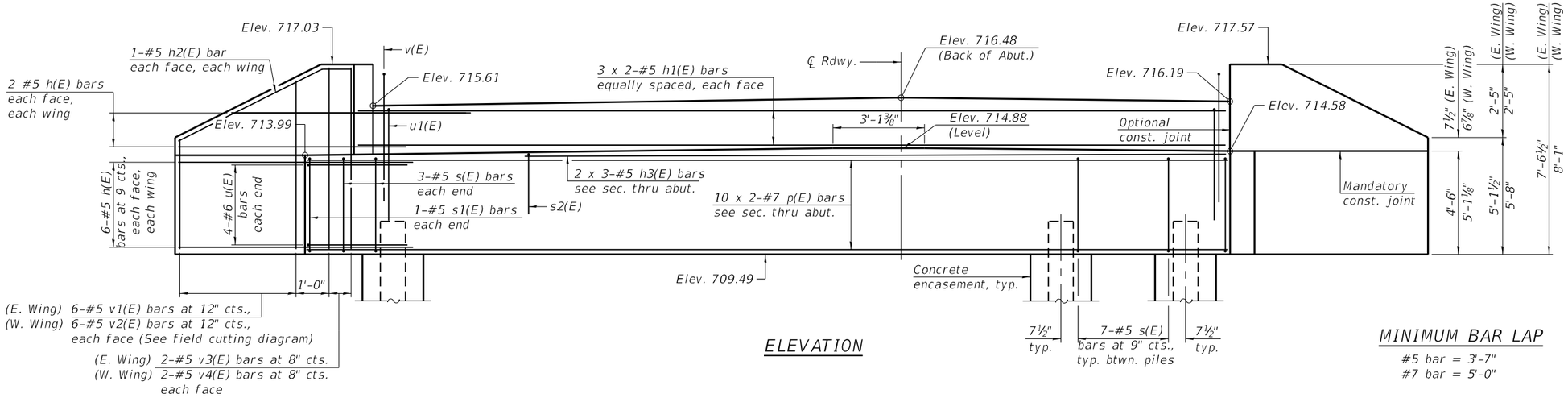

ELEVATION

MINIMUM BAR LAP

#5 bar = 3'-7"
#7 bar = 5'-0"

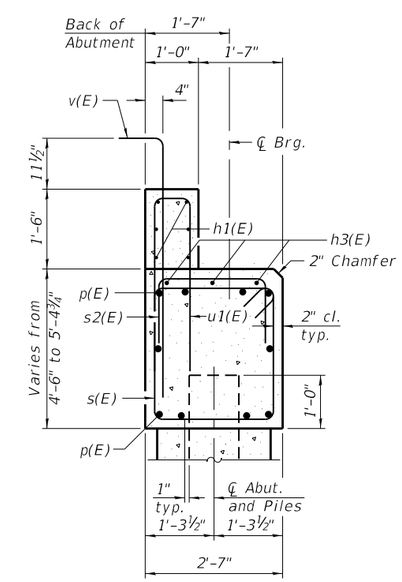

SECTION A-A

(Dimensions are at right angles to abutment)

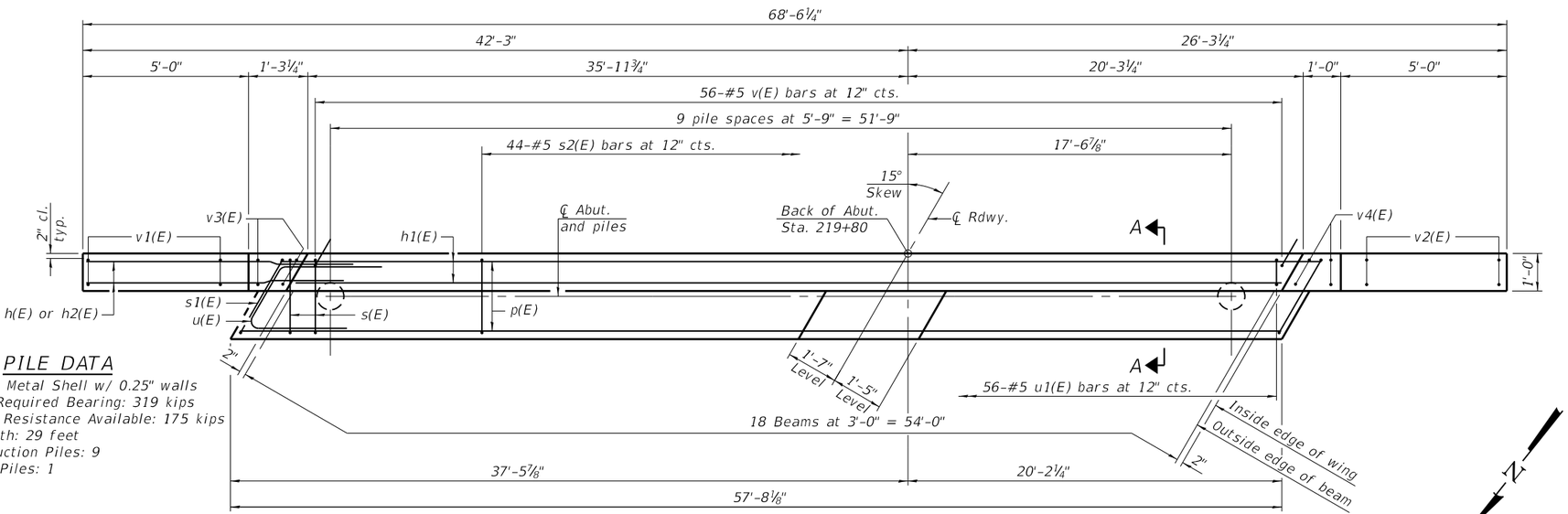

PILE DATA

Type: 12" Metal Shell w/ 0.25" walls
Nominal Required Bearing: 319 kips
Factored Resistance Available: 175 kips
Est. Length: 29 feet
No. Production Piles: 9
No. Test Piles: 1

PLAN

Piles shall be driven through 24" diameter precored holes extending to elevation 695.00 according to Article 512.09(c) of the Standard Specifications. Cost included in driving piles.

BILL OF MATERIAL

Bar	No.	Size	Length	Shape
h(E)	32	#5	9'-8"	
h1(E)	12	#5	29'-11"	
h2(E)	4	#5	6'-3"	
h3(E)	6	#5	24'-0"	
p(E)	20	#7	31'-2"	
s(E)	69	#5	13'-9"	
s1(E)	2	#5	13'-11"	
s2(E)	44	#5	8'-11"	
u(E)	8	#6	11'-0"	
u1(E)	56	#5	8'-2"	
v(E)	56	#5	5'-9"	
v1(E)	6	#5	11'-6"	
v2(E)	6	#5	12'-7"	
v3(E)	4	#5	7'-1"	
v4(E)	4	#5	7'-8"	
Structure Excavation			Cu. Yd.	106
Concrete Structures			Cu. Yd.	33.0
Reinforcement Bars, Epoxy Coated			Pound	4730
Furnishing Metal Shell Piles 12" x 0.250"			Foot	261
Driving Piles			Foot	261
Test Pile Metal Shells			Each	1
Pile Shoes			Each	10
Concrete Encasement			Cu. Yd.	4.6

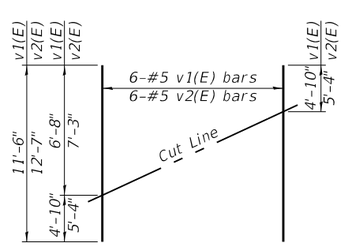

FIELD CUTTING DIAGRAM

Order v1(E) bars full length. Cut as shown and use remainder of bars in opposite face.

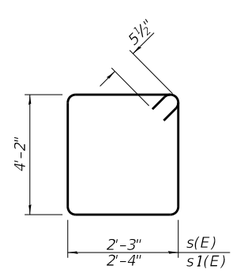

BARS s(E) & s1(E)

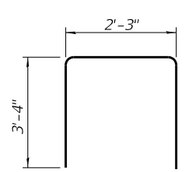

BAR s2(E)

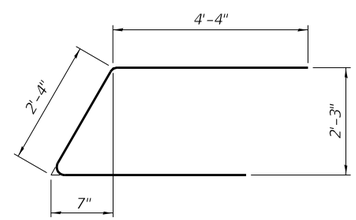

BAR u(E)

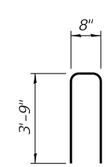

BAR u1(E)

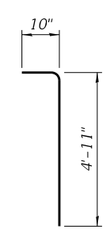

BAR v(E)

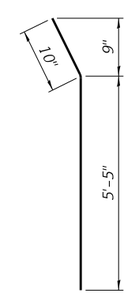

BAR h2(E)

Notes:
For details of piles and Concrete Encasement, see sheet 17 of 18.
Cast backwall and tops of wingwalls after beams have been erected.

MAURER-STUTZ ENGINEERS SURVEYORS

USER NAME = baswanson	DESIGNED - MSM	REVISED -	
	CHECKED - LVM	REVISED -	
PLOT SCALE =	DRAWN - KJA	REVISED -	
PLOT DATE = 12/2/2024	CHECKED - BAS	REVISED -	

WOODFORD COUNTY HIGHWAY DEPARTMENT

SOUTH ABUTMENT
STRUCTURE NO. 102-3221

SHEET 15 OF 18 SHEETS

F.A.S. RTE.	SECTION	COUNTY	TOTAL SHEETS	SHEET NO.
364	20-00091-03-BR	WOODFORD	114	69
		CONTRACT NO. 89854		

MODEL: Default
FILE NAME: S:\37\2016\2371601\2.22 (Woodford Co CH 13 at Front St Ph III)\CADD\CADD Sheets\1023221-015-S Abutment.dgn
12/2/2024 8:16:43 AM

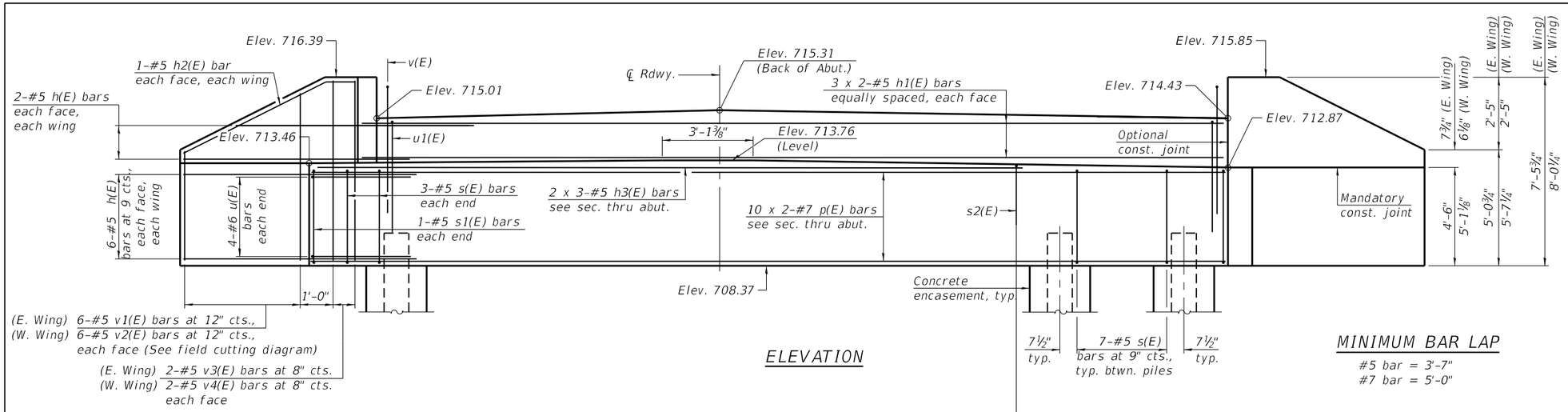

ELEVATION

MINIMUM BAR LAP

#5 bar = 3'-7"
#7 bar = 5'-0"

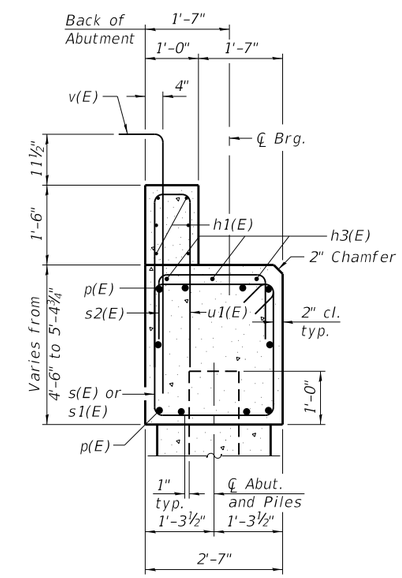

SECTION A-A

(Dimensions are at right angles to abutment)

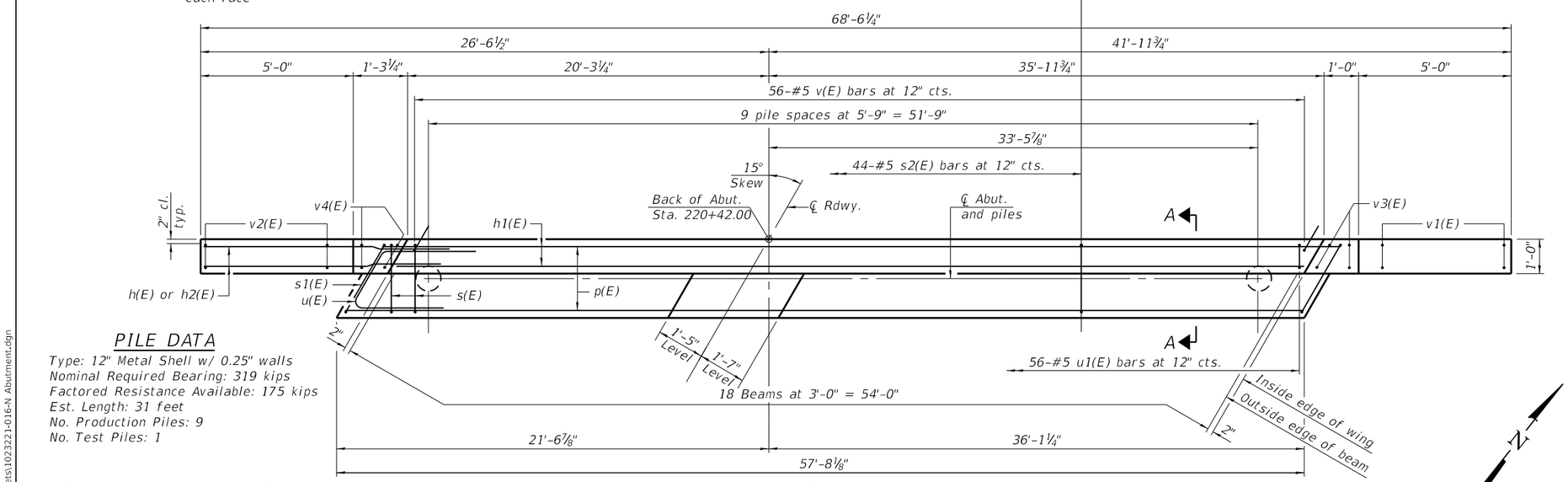

PLAN

PILE DATA

Type: 12" Metal Shell w/ 0.25" walls
Nominal Required Bearing: 319 kips
Factored Resistance Available: 175 kips
Est. Length: 31 feet
No. Production Piles: 9
No. Test Piles: 1

Piles shall be driven through 24" diameter precored holes extending to elevation 695.0 according to Article 512.09(c) of the Standard Specifications. Excavate to locate and expose water main near easternmost pile prior to precoring. Cost included in driving piles.

BILL OF MATERIAL

Bar	No.	Size	Length	Shape
h(E)	32	#5	9'-8"	
h1(E)	12	#5	29'-11"	
h2(E)	4	#5	6'-3"	
h3(E)	6	#5	24'-0'	
p(E)	20	#7	31'-2"	
s(E)	69	#5	13'-9"	
s1(E)	2	#5	13'-11"	
s2(E)	44	#5	8'-11"	
u(E)	8	#6	11'-0"	
u1(E)	56	#5	8'-2"	
v(E)	56	#5	5'-9"	
v1(E)	6	#5	11'-6"	
v2(E)	6	#5	12'-7"	
v3(E)	4	#5	7'-1"	
v4(E)	4	#5	7'-8"	
Structure Excavation			Cu. Yd.	70
Concrete Structures			Cu. Yd.	32.7
Reinforcement Bars, Epoxy Coated			Pound	4730
Furnishing Metal Shell Piles 12" x 0.250"			Foot	279
Driving Piles			Foot	279
Test Pile Metal Shells			Each	1
Pile Shoes			Each	10
Concrete Encasement			Cu. Yd.	4.6

Notes:
For details of piles and Concrete Encasement, see sheet 17 of 18.
Cast backwall and tops of wingwalls after beams have been erected.

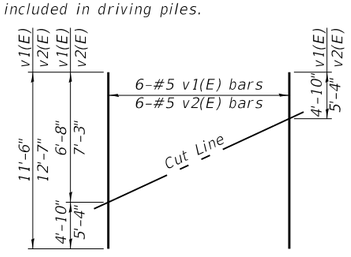

FIELD CUTTING DIAGRAM

Order v1(E) bars full length. Cut as shown and use remainder of bars in opposite face.

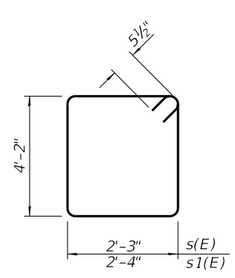

BARS s(E) & s1(E)

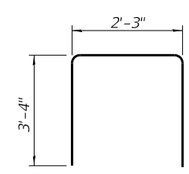

BAR s2(E)

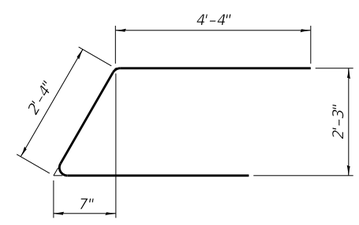

BAR u(E)

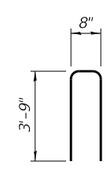

BAR u1(E)

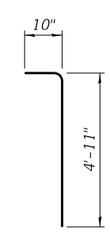

BAR v(E)

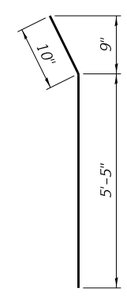

BAR h2(E)

MAURER-STUTZ ENGINEERS SURVEYORS	USER NAME = baswanson	DESIGNED - KM MSM	REVISED -
		CHECKED - LVM	REVISED -
	PLOT SCALE =	DRAWN - KM KJA	REVISED -
	PLOT DATE = 12/2/2024	CHECKED - BAS	REVISED -

WOODFORD COUNTY
HIGHWAY DEPARTMENT

NORTH ABUTMENT
STRUCTURE NO. 102-3221

SHEET 16 OF 18 SHEETS

F.A.S. RTE.	SECTION	COUNTY	TOTAL SHEETS	SHEET NO.
364	20-00091-03-BR	WOODFORD	114	70

CONTRACT NO. 89854

MODEL: Default
FILE NAME: S:\237\2016\2371601 2.22 (Woodford Co CH 13 at Front St Ph III)\CADD\CADD Sheets\1023221-016-N Abutment.dgn
12/2/2024 8:16:44 AM

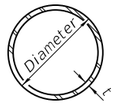

METAL SHELL PILE TABLE

Designation and outside diameter	Wall thickness t	Weight per foot (Lbs./ft.)	Inside volume (yd.³/ft.)
PP12	0.250"	31.40	0.0267
PP14	0.250"	36.75	0.0368
PP14	0.312"	45.65	0.0361
PP16	0.312"	52.32	0.0478
PP16	0.375"	62.64	0.0470

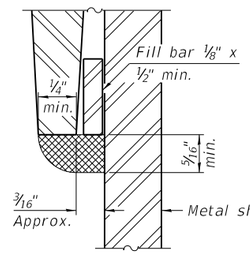

DETAIL A

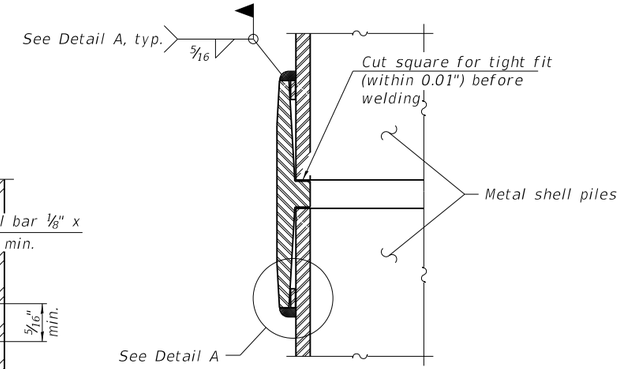

WELDED COMMERCIAL SPLICE

Notes:
The 1/8" x 1/2" min. fill bar may be constructed of 2 bars with a 1/8" max. gap between them.
Pile segments shall be driven to solid contact with splicer before welding.

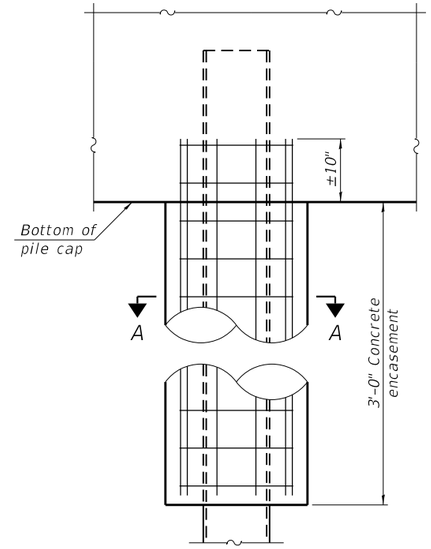

ELEVATION

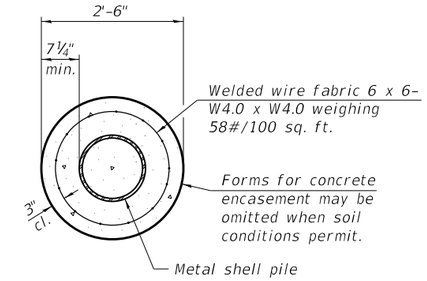

SECTION A-A

INDIVIDUAL PILE CONCRETE ENCASEMENT

(When specified)

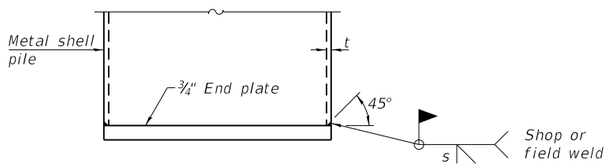

s = t - 1/8"

END PLATE ATTACHMENT

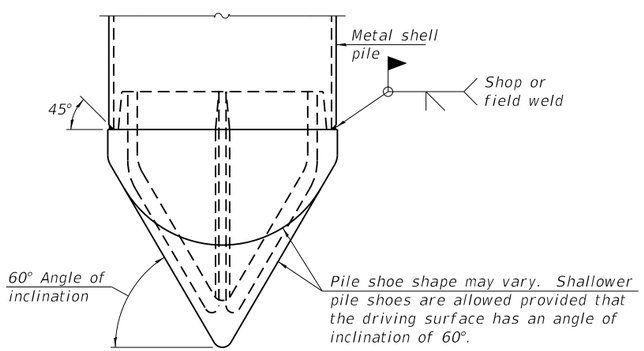

PILE SHOE ATTACHMENT

(When called for on the plans, the Contractor shall furnish metal shell pile shoes consisting of a single piece conical pile point as shown. The pile shoes shall be cast in one piece steel according to either ASTM A 148 Grade 80-50 or AASHTO M 103 Grade 65-35 and shall provide full bearing over the full circumference of the metal shell pile. The pile shoe shall have tapered leads to assure proper alignment and fitting and shall be secured to the pile with a circumferential weld).

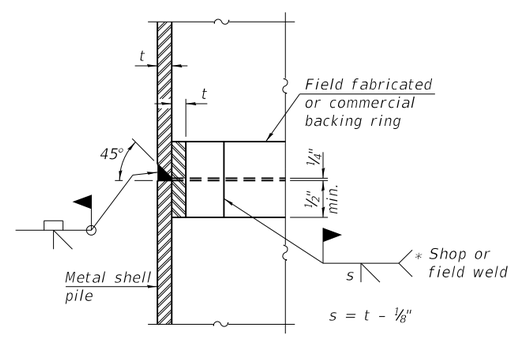

s = t - 1/8"

COMPLETE PENETRATION WELD SPLICE

* Field fabricated backing ring may be made from pile shell by removing segment to allow reducing circumference and vertically rejoin with partial joint penetration weld.

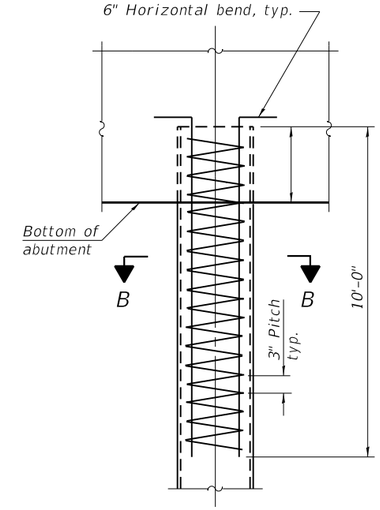

ELEVATION

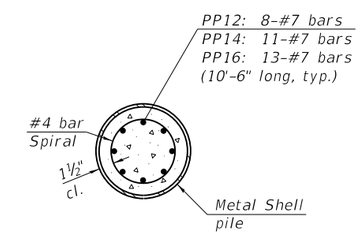

SECTION B-B

REINFORCEMENT AT ABUTMENTS

(Omit when concrete encasement is specified)

Note:
The metal shell piles shall be according to Article 1006.05 of the Standard Specifications.

F-MS 5-15-2023

MODEL: Default
FILE NAME: S:\237\2016\2371612.22 (Woodford Co CH 13 at Front St Ph III)\CADD\CADD Sheets\1023221-017-MS Piles.dgn
12/2/2024 8:16:45 AM

MAURER-STUTZ ENGINEERS SURVEYORS

USER NAME = baswanson	DESIGNED - MSM	REVISED -	
	CHECKED - LVM	REVISED -	
PLOT SCALE =	DRAWN - KJA	REVISED -	
PLOT DATE = 12/2/2024	CHECKED - BAS	REVISED -	

WOODFORD COUNTY HIGHWAY DEPARTMENT

METAL SHELL PILE DETAILS
STRUCTURE NO. 102-3221

SHEET 17 OF 18 SHEETS

F.A.S. RTE.	SECTION	COUNTY	TOTAL SHEETS	SHEET NO.
364	20-00091-03-BR	WOODFORD	114	71
		CONTRACT NO. 89854		

N Section 22, T27N, R1W, 3P.M.

FORM NO. B. D. 137 REV. 9-80

Sh. 1 of 1 Sh.

BRIDGE FOUNDATION BORING LOG

PROJECT
ROUTE
SEC. 80-~~01113~~ 00066-00-BR
COUNTY Woodford

BRIDGE Roanoke Township
STA.

Date 4-1-80
Bored By G. Legan
Checked By R. Pickard

Boring No. 1 E. Abut.
Station 32' E ℄ Creek
Offset 32' S. ℄ Road

Surface Water El.
Groundwater El. at Completion
After ___ Hours

Ground Surface 101.4* (0)

Description	Elevation	N	Qu t/s.f.	w (%)
MEDIUM BROWN SILTY CLAY LOAM	99.4			
STIFF RED-BROWN SILTY CLAY LOAM FILL	97.4	21	1.8 P	16
VERY STIFF BROWN SILTY CLAY LOAM	94.9 (-5)	12	2.5 B	26
VERY LOOSE BROWN FINE AND COARSE SAND	92.4	3	0.5 P	20
VERY STIFF YELLOW BROWN SILTY CLAY LOAM	90.9 (-10)	6	3.3S	30
		3	0.9S	48
MEDIUM RED-BROWN SILTY LOAM		19	1.7 S	79
	(-15)	14	1.3 S	44
	82.4	20	1.6 S	60
VERY STIFF GRAY SILTY CLAY TILL	(-20)	14	2.9 B	23
	79.9			
VERY STIFF GRAY SICL TILL				
VERY STIFF GRAY SILTY CLAY LOAM TILL	77.4	16	2.3 B	21
HARD GRAY SILTY CLAY LOAM TILL	(-25)	28	4.5 S	15
		28	5.6 S	12
	(-30)	54	10.3 S	11
		41	10.3 S	11
	(-35) 65.4	56	9.9 S	11
	(-40)			
	(-45)			

* ASSUMED B.M. ELEV. 100.0 AT SPIKE IN POWER POLE CORNER OF FRONT AND MAIN STREETS.

N – Standard Penetration Test – Blows per foot to drive 2" O.D. Split Spoon Sampler 12" with 140# hammer falling 30".

Qu – Unconfined Compressive Strength – t/sf

w – Water Content – percentage of oven dry weight – %.

Type failure:
B – Bulge Failure
S – Shear Failure
E – Estimated Value
P – Penetrometer

FORM NO. B. D. 137 REV. 9-80

Sh. 1 of 1 Sh.

BRIDGE FOUNDATION BORING LOG

PROJECT
ROUTE
SEC. 80-01113-00-BR
COUNTY Woodford

BRIDGE Roanoke Township
STA.

Date 3-31-80
Bored By G. Legan
Checked By R. Pickard

Boring No. 2 W. Abut
Station 65' W ℄ Creek
Offset 12' S. ℄ Road

Surface Water El. 90.4
Groundwater El. at Completion -
After - Hours -

Ground Surface 99.3 (0)

Description	Elevation	N	Qu t/s.f.	w (%)
MEDIUM BROWN & BLACK CLAY LOAM FILL		3	-	33
	(-5) 93.8	2	-	43
SOFT BROWN SILTY CLAY LOAM	92.8	2	0.5P	38
MEDIUM BROWN LOAM TO GRAVEL		13	0.6 B	22
	(-10)	6	-	22
	86.8	15	-	13
MEDIUM BROWN SAND AND GRAVEL		23	-	17
	(-15)	22	-	14
	77.8	14	-	12
VERY STIFF GRAY SILTY CLAY LOAM TILL				
VERY STIFF GRAY SILTY CLAY TILL	75.3	11	2.1 B	18
HARD GRAY SILTY CLAY TILL	(-25)	21	4.1 B	14
		30	4.6 S	11
	(-30)	77	4.0 S	12
	(-35)	-	-	-
	63.3	62	4.5+ P	11
	(-40)			
	(-45)			

N – Standard Penetration Test – Blows per foot to drive 2" O.D. Split Spoon Sampler 12" with 140# hammer falling 30".

Qu – Unconfined Compressive Strength – t/sf

w – Water Content – percentage of oven dry weight – %.

Type failure:
B – Bulge Failure
S – Shear Failure
E – Estimated Value
P – Penetrometer

Note:
B.M. Elev. 100.0 is approximately equal to elevation 712.7 in the datum for this project.

MODEL: Default
FILE NAME: S:\237\2016\23716012.22 (Woodford Co CH 13 at Front St Ph II)\CADD\CADD Sheets\1023221-018-Boring Logs.dgn

MAURER-STUTZ ENGINEERS SURVEYORS

USER NAME = baswanson	DESIGNED - MSM	REVISED -	
	CHECKED - LVM	REVISED -	
PLOT SCALE =	DRAWN - KJA	REVISED -	
PLOT DATE = 12/2/2024	CHECKED - BAS	REVISED -	

WOODFORD COUNTY HIGHWAY DEPARTMENT

SOIL BORING LOGS
STRUCTURE NO. 102-3221

SHEET 18 OF 18 SHEETS

F.A.S. RTE.	SECTION	COUNTY	TOTAL SHEETS	SHEET NO.
364	20-00091-03-BR	WOODFORD	114	72
		CONTRACT NO. 89854		

12/2/2024 8:16:46 AM

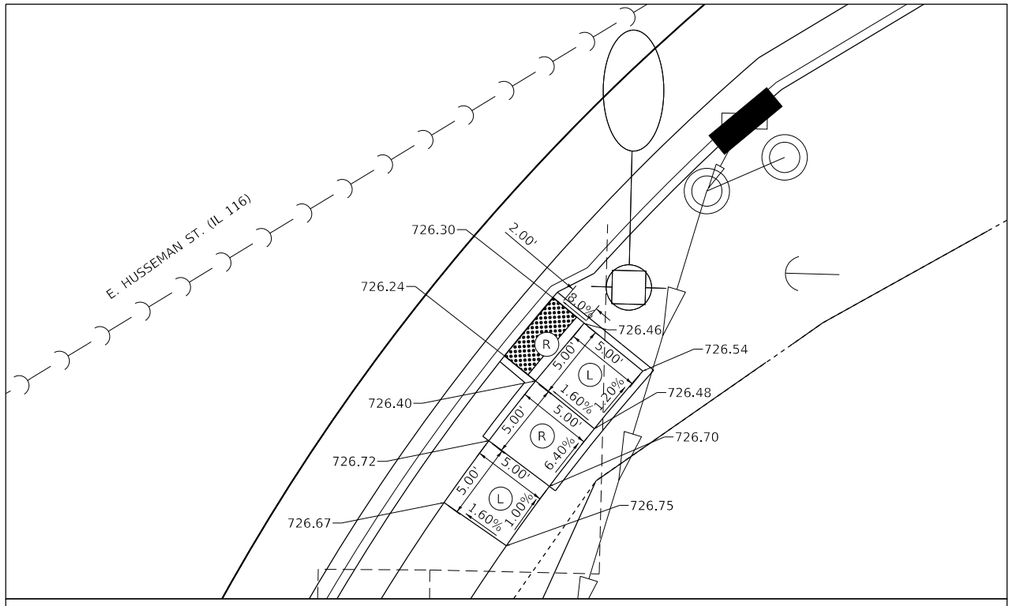

SE QUADRANT CH 13 (MAIN ST.) / IL -116

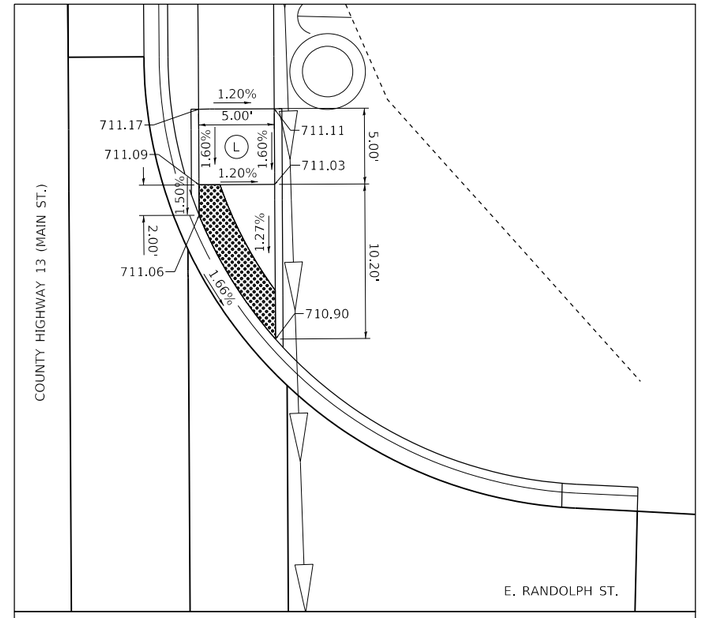

NE QUADRANT CH 13 (MAIN ST.) / E. RANDOLPH ST.

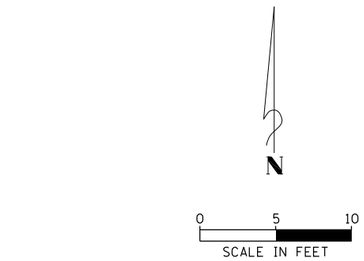

LEGEND

- DETECTABLE WARNING
- (L) LANDING
- (R) RAMP
- (T) TRANSITION
- (R/BT) RAMP/BLENDED TRANSITION

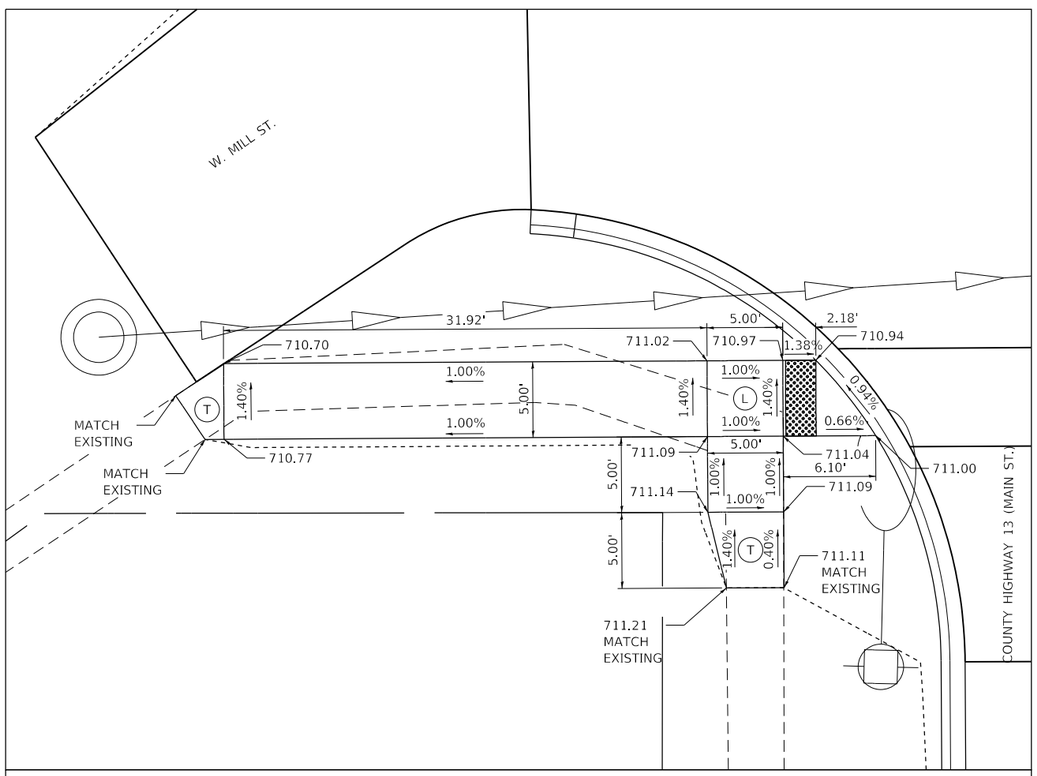

SW QUADRANT CH 13 (MAIN ST.) / W. MILL ST.

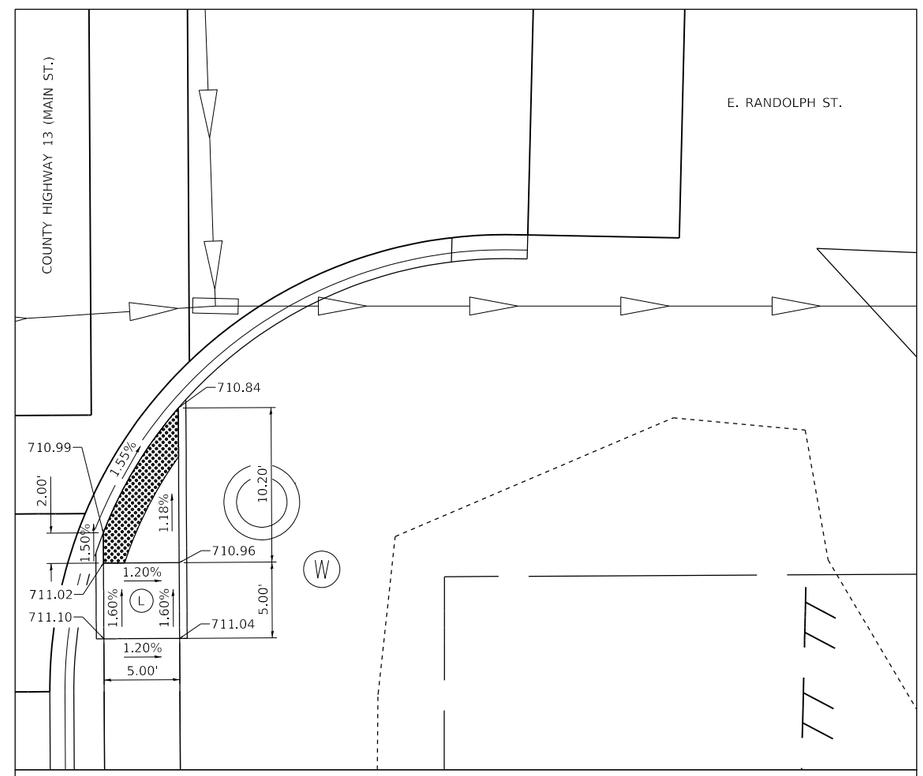

SE QUADRANT CH 13 (MAIN ST.) / E. RANDOLPH ST.

MODEL: Default
FILE NAME: S:\237\2016\23716012\22 Woodford Co CH 13 at Front St Ph III\CADD\CADD Sheets\D416012-sht-ADA Details.dgn

MAURER-STUTZ ENGINEERS SURVEYORS

USER NAME = jdspiller	DESIGNED - CLD	REVISED -	
	DRAWN - CAD	REVISED -	
PLOT SCALE = 10.0000 ' / in.	CHECKED - JDS	REVISED -	
PLOT DATE = 11/12/2024	DATE - 10/18/2024	REVISED -	

WOODFORD COUNTY HIGHWAY DEPARTMENT

COUNTY HIGHWAY 13 RECONSTRUCTION AT FRONT ST.
ADA CURB RAMP DETAILS – MAIN AND MILL/RANDOLPH

SCALE: 1" = 5' | SHEET 1 OF 1 SHEETS | STA. TO STA.

F.A.S. RTE.	SECTION	COUNTY	TOTAL SHEETS	SHEET NO.
364	20-00091-03-BR	WOODFORD	114	73
		CONTRACT NO. 89854		

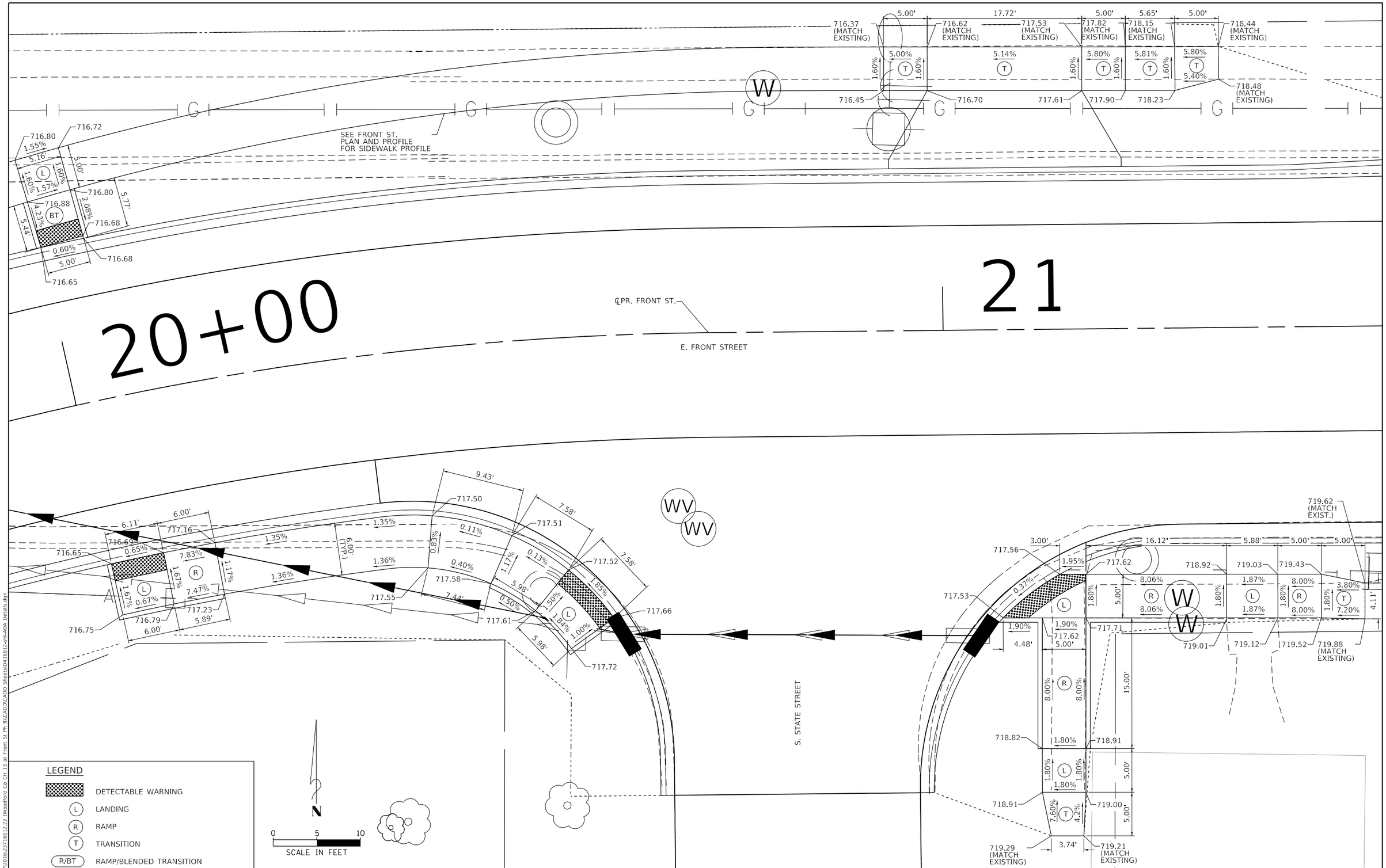

MODEL: Default
FILE NAME: S:\037\2016\2371601\2-22 Woodford Co CH 13 at Front St Ph III\CADD\CADD Sheets\041601 2-sht-ADA Details.dgn

MAURER-STUTZ ENGINEERS SURVEYORS

USER NAME = jdspiller	DESIGNED - CLD	REVISED -	
	DRAWN - CAD	REVISED -	
PLOT SCALE = 10.0000 ' / in.	CHECKED - JDS	REVISED -	
PLOT DATE = 11/12/2024	DATE - 10/18/2024	REVISED -	

WOODFORD COUNTY HIGHWAY DEPARTMENT

COUNTY HIGHWAY 13 RECONSTRUCTION AT FRONT ST.
ADA CURB RAMP DETAILS – FRONT AND STATE

SCALE: 1" = 5' | SHEET 1 OF 1 SHEETS | STA. TO STA.

F.A.S. RTE.	SECTION	COUNTY	TOTAL SHEETS	SHEET NO.
364	20-00091-03-BR	WOODFORD	114	74
		CONTRACT NO. 89854		

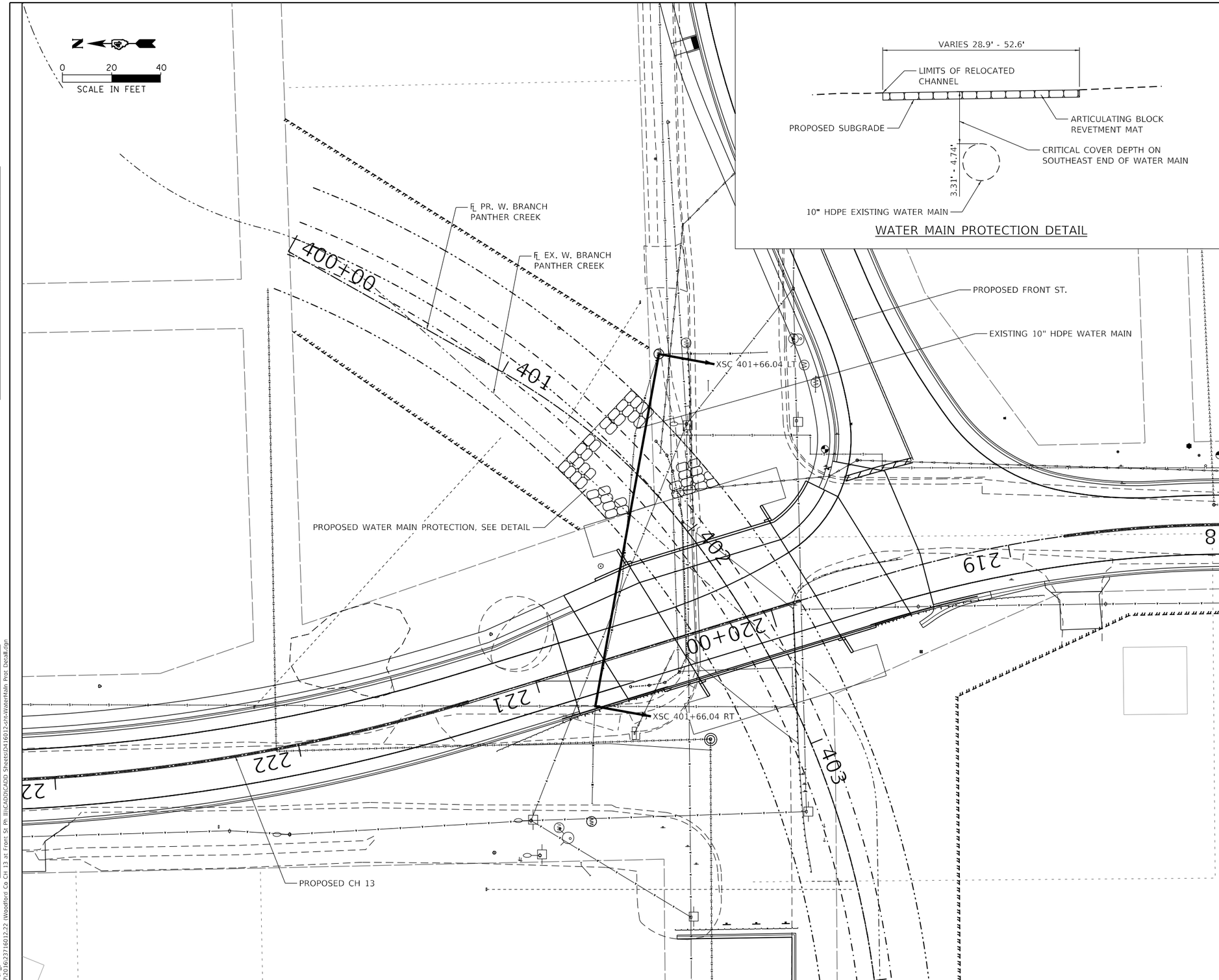

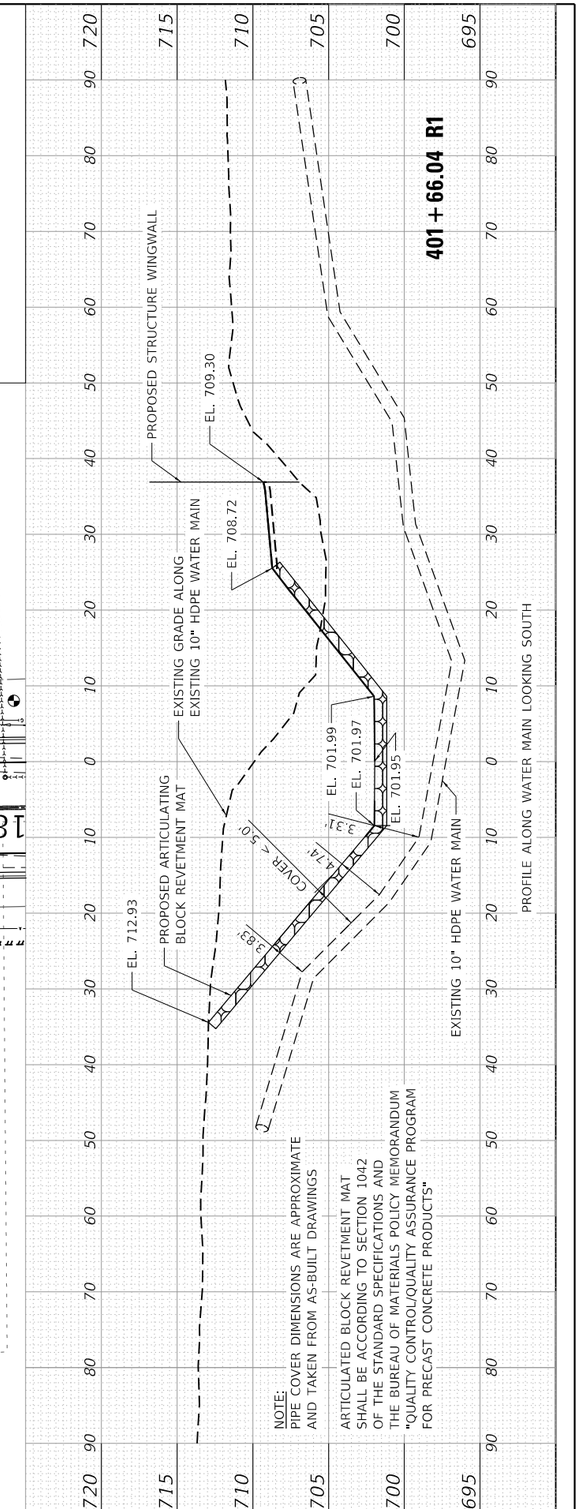

NOTE:
PIPE COVER DIMENSIONS ARE APPROXIMATE AND TAKEN FROM AS-BUILT DRAWINGS

ARTICULATED BLOCK REVETMENT MAT SHALL BE ACCORDING TO SECTION 1042 OF THE STANDARD SPECIFICATIONS AND THE BUREAU OF MATERIALS POLICY MEMORANDUM "QUALITY CONTROL/QUALITY ASSURANCE PROGRAM FOR PRECAST CONCRETE PRODUCTS"

FINAL SURVEY	BY	DATE
SURVEYED		
PLOTTED		
TEMPLATE		
AREAS		
AREAS CHECKED		
NOTE BOOK		
NO.		

ORIGINAL SURVEY	BY	DATE
SURVEYED		
PLOTTED		
TEMPLATE		
AREAS		
AREAS CHECKED		
NOTE BOOK		
NO.		

MODEL: WFLPWBPCA_3
FILE NAME: S:\237\2016\2371601 2.22 Woodford Co CH 13 at Front St Ph III\CADD\CADD Sheets\D416012-sht-WaterMain Prot Detail.dgn

MAURER-STUTZ ENGINEERS SURVEYORS

USER NAME = jdspiller	DESIGNED - CLD	REVISED -	
	DRAWN - CAD	REVISED -	
PLOT SCALE = 20.0000 ' / in.	CHECKED - JDS	REVISED -	
PLOT DATE = 11/12/2024	DATE - 10/18/2024	REVISED -	

WOODFORD COUNTY HIGHWAY DEPARTMENT

COUNTY HIGHWAY 13 RECONSTRUCTION AT FRONT ST.
WATER MAIN CROSSING PROTECTION DETAIL SHEET

SCALE: 1" = 20' | SHEET 1 OF 1 SHEETS | STA. 401+66.04

F.A.S. RTE.	SECTION	COUNTY	TOTAL SHEETS	SHEET NO.
364	20-00091-03-BR	WOODFORD	114	75
		CONTRACT NO. 89854		

BOX CULVERT END SECTIONS

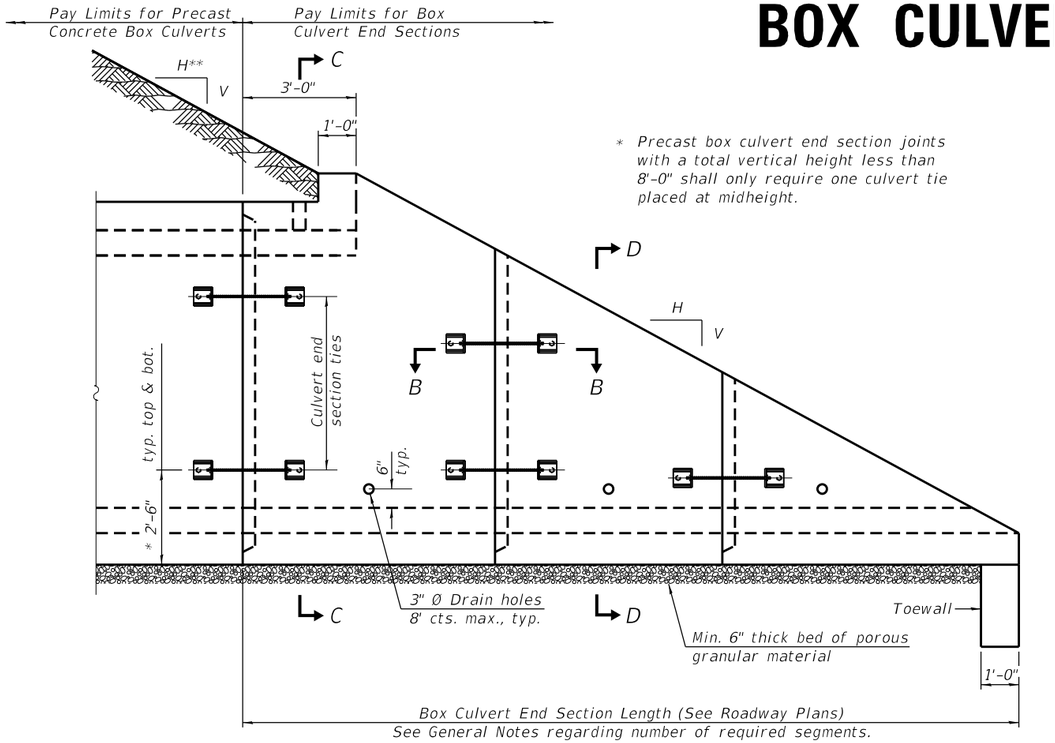

* Precast box culvert end section joints with a total vertical height less than 8'-0" shall only require one culvert tie placed at midheight.

ELEVATION

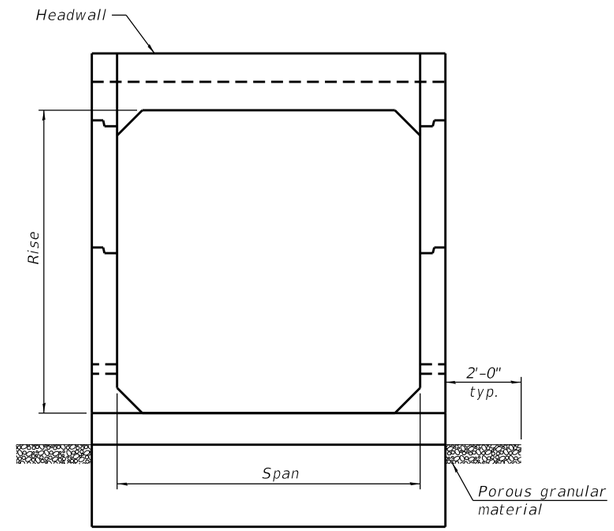

END VIEW

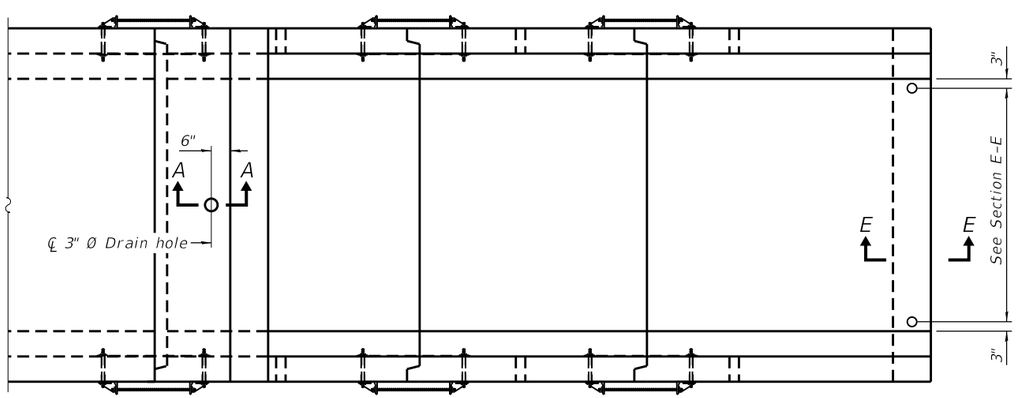

PLAN

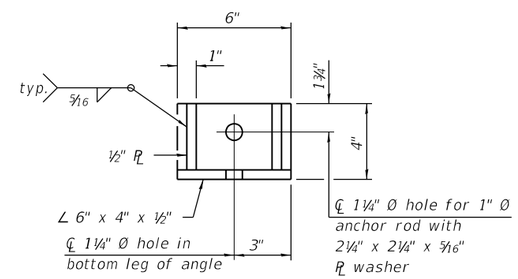

RESTRAINT ANGLE DETAIL

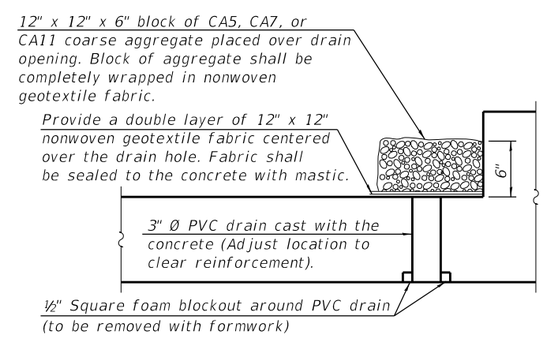

SECTION A-A

(All costs associated with furnishing and constructing the above drain detail will not be measured for payment but shall be included in the contract unit price for the associated work.)

GENERAL NOTES

Box Culvert End Sections shall be constructed according to the requirements of Section 540 of the Standard Specifications except as modified herein. This work will be measured for payment as each, with each end of each culvert being one each. End sections will be paid for at the contract unit price per each for Box Culvert End Sections of the culvert number specified.

Typical box section dimensions, materials, and reinforcement details for Box Culvert End Sections shall be according to the requirements of ASTM C 1577 as required for the design of the portion of the culvert within the limits of Precast Concrete Box Culverts except as modified herein.

Number of segments shown in Elevation is for example only. Length and number of precast box sections required to construct Box Culvert End Sections shall be determined by the Contractor.

** See roadway plans for embankment slope (V:H).

1" Ø anchor rods for the culvert ties shall conform to the requirements of ASTM F1554, Grade 105. Structural steel for tie plate and restraint angle shall conform to the requirements of Article 1006.04 of the Standard Specifications. All components of the culvert tie detail shall be galvanized according to the requirements of AASHTO M 111 or M 232 as applicable. 2¼" x 2¼" x 5/16" plate washers shall be provided under each nut required for the anchor rods. Anchor rods connecting precast sections shall be brought to a snug tight condition followed by an additional ½ turn on one of the nuts for anchor rods installed in the walls. Match marks shall be provided on the bolt and nut to verify relative rotation between the bolt and the nut. Holes in the walls for the culvert tie assembly may be drilled using core bits in lieu of using formed holes.

All costs associated with furnishing and installing or constructing the toewall and culvert ties will not be measured for payment but shall be included in the contract unit price for Box Culvert End Sections of the culvert number specified.

Drain holes shall conform to the requirements of Article 503.11 of the Standard Specifications unless noted otherwise.

Nonwoven geotextile fabric shall conform to the requirements of Article 1080.01. The minimum weight of the fabric shall be 6 oz. / sq. yd..

For end sections with traversable pipe grate systems, see grate detail sheet for required modifications.

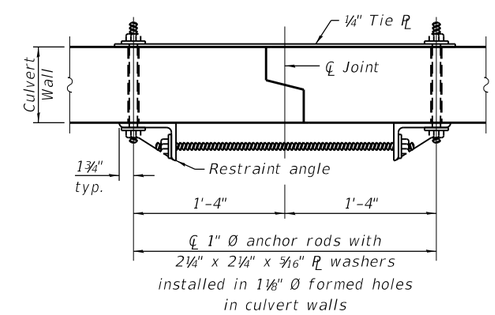

SECTION B-B

(Showing end section tie details)

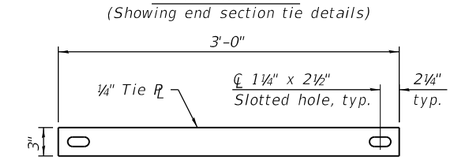

TIE PLATE DETAIL

(Sheet 1 of 2)

SCB-TES 2-17-2017

MAURER-STUTZ ENGINEERS SURVEYORS	USER NAME = jdspiller	DESIGNED -	REVISED - 1-10-18	WOODFORD COUNTY HIGHWAY DEPARTMENT
		DRAWN -	REVISED - 1-05-16	
	PLOT SCALE = 2.0000 ' / in.	CHECKED -	REVISED - 5-09-14	
	PLOT DATE = 11/29/2024	DATE -	REVISED -	

COUNTY HIGHWAY 13 RECONSTRUCTION AT FRONT ST
DISTRICT 2 STANDARD – BOX CULVERT END SECTIONS 10.1

SCALE: | SHEET 1 OF 2 SHEETS | STA. TO STA.

F.A.S. RTE.	SECTION	COUNTY	TOTAL SHEETS	SHEET NO.
364	20-00091-03-BR	WOODFORD	114	76
		CONTRACT NO. 89854		
		ILLINOIS	FED. AID PROJECT	

FILE NAME S:\237\2016\2371601222 \Woodford Co CH 13 at Front St Ph III\CADD\CADD Sheets\0416012-sht-District-2-Details.dgn

BOX CULVERT END SECTIONS

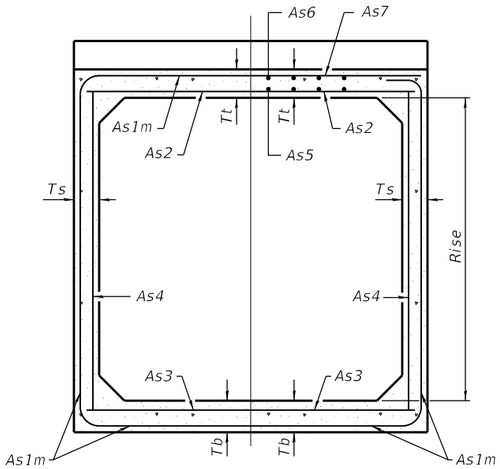

(Design Earth Cover ≥ 2 ft) (Design Earth Cover < 2 ft)

SECTION C-C

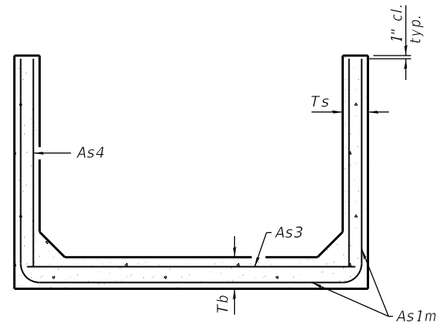

SECTION D-D

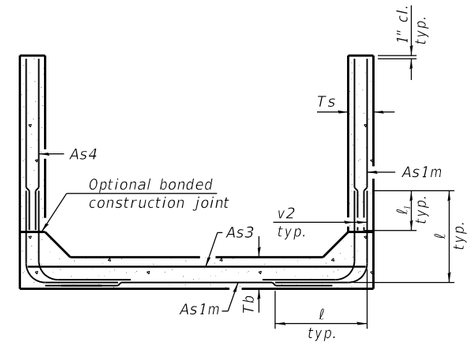

ALTERNATE SECTION D-D

As1m REINFORCEMENT (in.²/ ft)											
Ts (in.) \ Rise (ft)	2	3	4	5	6	7	8	9	10	11	12
4	0.19	0.17									
5	0.26	0.21	0.18								
6	0.22	0.26	0.23	0.22							
7	0.25	0.33	0.59	0.27	0.28						
8	0.40	0.35	0.43	0.39	0.36	0.34	0.40				
9	0.44	0.39	0.35	0.43	0.40	0.37	0.36	0.48			
10	0.48	0.42	0.38	0.47	0.44	0.41	0.38	0.42	0.56		
11	0.52	0.45	0.54	0.50	0.46	0.44	0.41	0.46	0.50	0.65	
12	0.55	0.49	0.58	0.54	0.50	0.48	0.45	0.46	0.46	0.61	0.75

(As1m reinforcement based upon welded wire reinforcement conforming to AASHTO M 55 or M 221).

ℓ1 DIMENSION

#3 bar = 2'-0"
#4 bar = 2'-8"
#5 bar = 3'-4"
#6 bar = 3'-11"

Notes:

Alternate Section D-D is provided to allow the Contractor the option of casting the bottom slab of the end section first followed by construction of the sidewalls using conventional forming methods. Shop drawings that detail slab thickness and reinforcement layout shall be submitted to the Engineer for review and approval when using Alternate Section D-D.

The size and spacing of the v2 bars shall provide a minimum reinforcement area along each face of the walls (in.²/ft.) equal to 1.10*(As1m). v2 bars may consist of #3 thru #6 size reinforcement bars and the longitudinal spacing shall not exceed the lesser of the wall thickness or 8 inches.

Bonded construction joints shall be prepared according to Article 503.09 of the Standard Specifications.

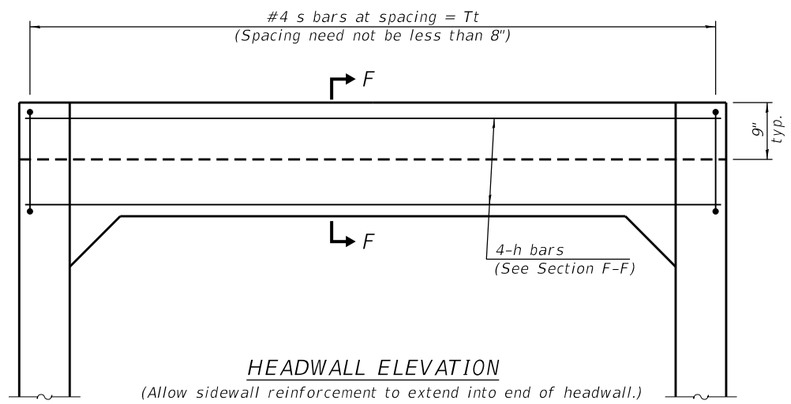

HEADWALL ELEVATION

(Allow sidewall reinforcement to extend into end of headwall.)

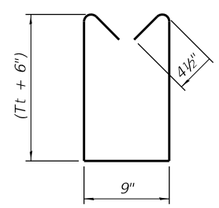

BAR s

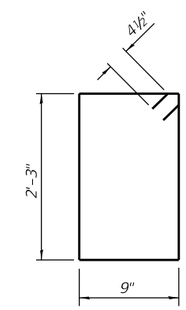

BAR s1

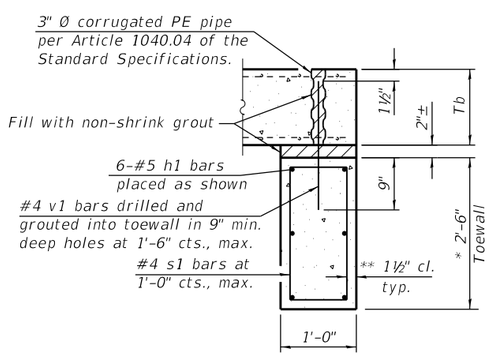

SECTION E-E

TOEWALL CONSTRUCTION SEQUENCE

1. Perform excavation and construct toewall.
2. Backfill according to the applicable paragraphs of Article 502.10 of the Standard Specifications and place bedding for precast box culvert end sections.
3. Set precast box culvert end section.
4. Drill and epoxy grout reinforcement in toewall in accordance with Section 584 of the Standard Specifications.
5. Pressure grout voids using non-shrink grout conforming to Section 1024 of the Standard Specifications.

* The Contractor may furnish a precast or cast-in-place toewall. The Contractor shall be responsible for the strength and stability of the precast toewall during handling. Additional lifting points may be required depending upon the length of the toewall or the Contractor may need to modify the design of the toewall for the proposed handling the method.

** If soil conditions permit, the sides of the toewall may be poured directly against the soil. The clear cover on the sides of the toewall shall be increased to 3" by increasing the thickness of the toewall.

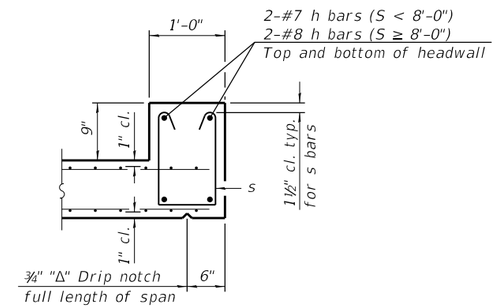

SECTION F-F

SCB-TES 2-17-2017

(Sheet 2 of 2)

FILE NAME S:\2372016\2371601\2.2 (Woodford Co CH 13 at Front St Ph III)\CADD\CADD Sheets\D416012-sht-Dist#1-c-2-Details.dgn

MAURER-STUTZ ENGINEERS SURVEYORS

USER NAME = jdspiller	DESIGNED -	REVISED - 1-10-18	WOODFORD COUNTY HIGHWAY DEPARTMENT
	DRAWN -	REVISED - 1-05-16	
PLOT SCALE = 2.0000 ' / in.	CHECKED -	REVISED - 5-09-14	
PLOT DATE = 11/29/2024	DATE -	REVISED -	

COUNTY HIGHWAY 13 RECONSTRUCTION AT FRONT ST
DISTRICT 2 STANDARD – BOX CULVERT END SECTIONS 10.1

SCALE: SHEET 2 OF 2 SHEETS STA. TO STA.

F.A.S. RTE.	SECTION	COUNTY	TOTAL SHEETS	SHEET NO.
364	20-00091-03-BR	WOODFORD	114	77

CONTRACT NO. 89854

ILLINOIS FED. AID PROJECT

SLOPE STEPS DETAIL

TYPICAL CROSS-SECTION EMBANKMENT
CONSTRUCTION ON SIDEHILL

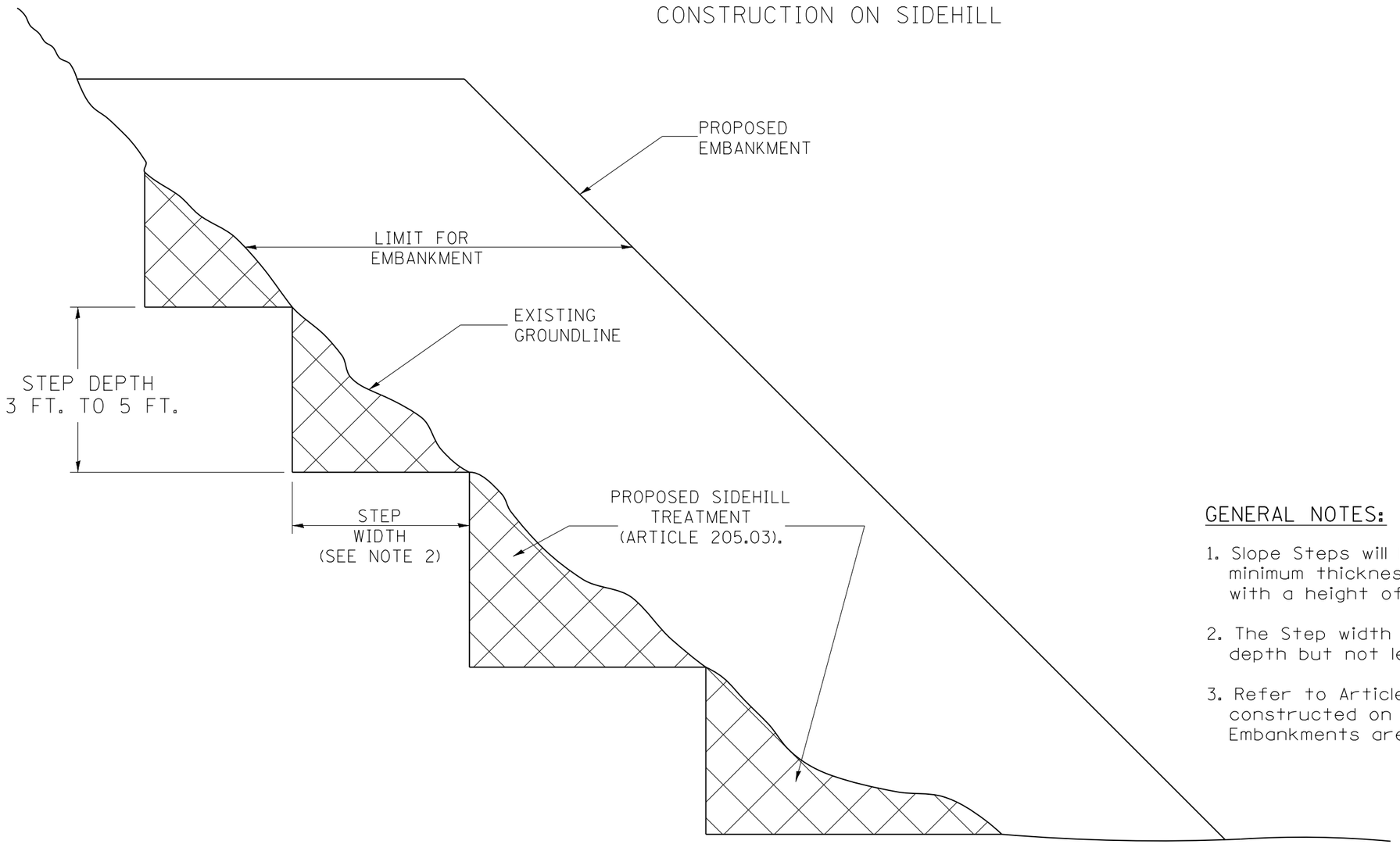

GENERAL NOTES:

1. Slope Steps will be required for all 12(300) minimum thickness "sliver fills" and on all fills with a height of 10 feet or greater.

2. The Step width shall be twice the Step depth but not less than 6 feet.

3. Refer to Article 205.03 for Embankment to be constructed on Hillside or Slopes, or if existing Embankments are to be widened.

REPLACEMENT MATERIAL:

STANDARD EMBANKMENT
(IN ACCORDANCE WITH
205 OF THE STANDARD SPECIFACATION).

All dimensions are in inches (millimeters) unless otherwise noted.

1-1-97	RENUM. L-5.03, NEW REVISION BOX, REVISED TITLE	T.P.
	BOX, REVISED GENERAL NOTES.	
10-16-06	REVISED TO 2007 SPEC.	M.A.
5-30-18	MINOR CORRECTION	R.D.

STATE OF ILLINOIS
DEPARTMENT OF TRANSPORTATION

SLOPE STEPS DETAIL

NOT TO SCALE

CADD STD. 205001-D4

F.A.S. RTE.	SECTION	COUNTY	TOTAL SHEETS	SHEET NO.
364	20-00091-03-BR	WOODFORD	114	78
		CONTRACT NO. 89854		
FED. ROAD DIST. NO.	ILLINOIS	FED. AID PROJECT		

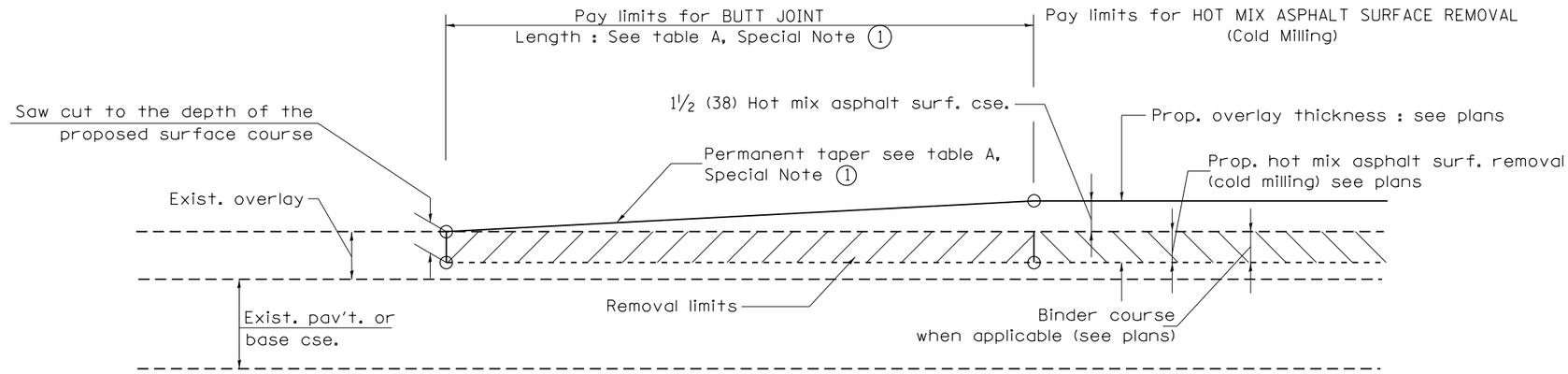

CASE 1 : WITH HOT MIX ASPHALT SURFACE REMOVAL (COLD MILLING)

TABLE A
TAPER RATES

SPECIAL NOTE NUMBER	ELEMENT	MAINLINE INTERSTATES & 4-LANE EXPRESSWAYS	ALL OTHERS
1	BUTT JOINT TAPER RATE	1:480	1:240
2	TEMPORARY RAMP TAPER RATE	1:80	1:40

GENERAL NOTES

1. The work shall be done in accordance with Article 406.08 and the Special Provision for Butt Joints.
2. The pavement surface to be removed may be either bituminous or P.C. concrete. The work shall be performed in accordance with Article 440.04 and the Special Provisions for Butt Joints.
3. The saw cut joints shall be primed just prior to the placing of bituminous material. The work will be in accordance with the applicable portions of Article 406.05.
4. The length of butt joint is based on the taper rate times change in cold milling depth within the butt joint pay limits, unless otherwise indicated.
5. Temporary ramps are paid for separately and not included in the cost of the butt joints.

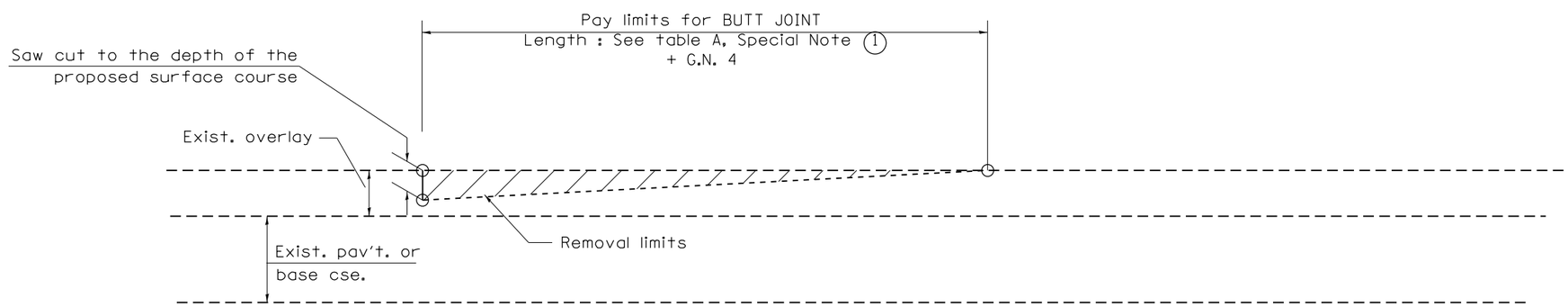

CASE 2 : NO HOT MIX ASPHALT SURFACE REMOVAL (COLD MILLING)

All dimensions are in inches (millimeters) unless otherwise noted.

01-01-97	RENUM. C-23.01, NEW REVISION BOX	T.P.	08-21-13	MAJOR MODIFICATIONS	R.D.
04-01-97	CORRECTION TO DEPTH	J.A.	04-12-16	MINOR CORRECTIONS	R.D.
09-15-05	REVISED DESIGNER NOTE	M.M.A.	02-14-17	ADDED NOTE 5	R.D.
10-16-06	REVISED TO 2007 SPEC.	M.A.	07-16-19	Wording and Spelling corrections	R.D.

STATE OF ILLINOIS
DEPARTMENT OF TRANSPORTATION

BUTT JOINTS

NOT TO SCALE

SHT. 1 OF 3
CADD STD. 406101-D4

F.A.S. RTE.	SECTION	COUNTY	TOTAL SHEETS	SHEET NO.
364	20-00091-03-BR	WOODFORD	114	79
		CONTRACT NO. 89854		

FED. ROAD DIST. NO. | ILLINOIS | FED. AID PROJECT

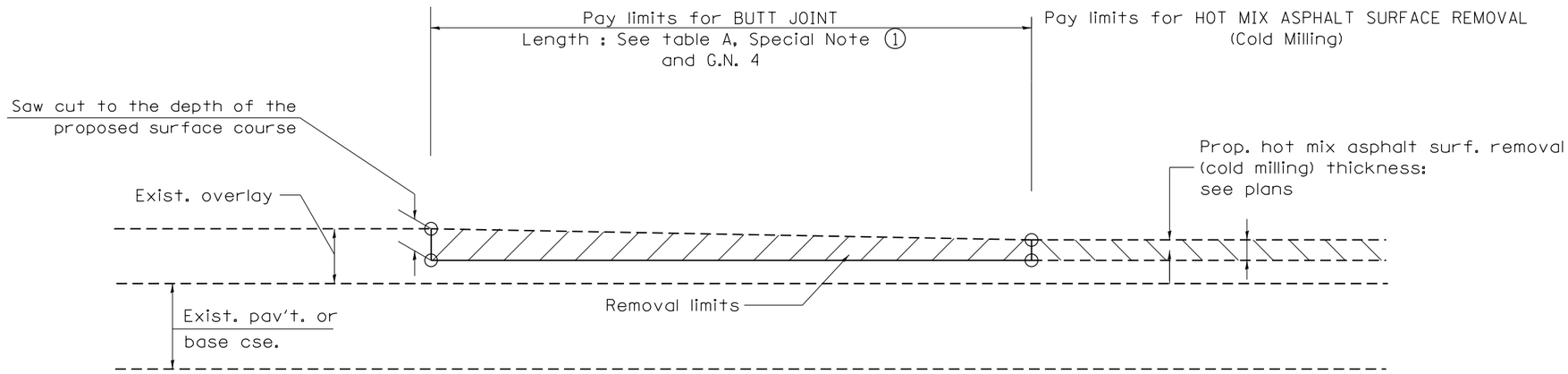

CASE 3 : HOT MIX ASPHALT SURFACE REMOVAL (COLD MILLING)
TIE-IN TO EXISTING BITUMINOUS TAPER

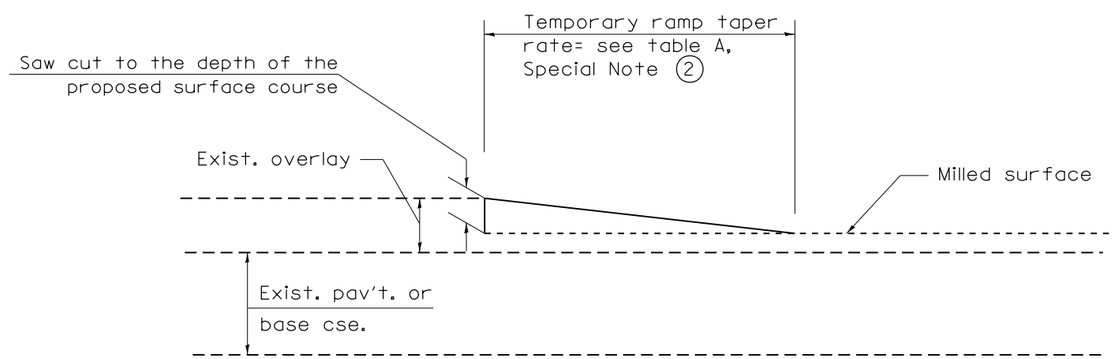

DETAIL TEMPORARY RAMP

All dimensions are in inches (millimeters) unless otherwise noted.

						STATE OF ILLINOIS DEPARTMENT OF TRANSPORTATION	BUTT JOINTS	F.A.S. RTE.	SECTION	COUNTY	TOTAL SHEETS / SHEET NO.
								364	20-00091-03-BR	WOODFORD	114 / 80
							SHT. 2 OF 3			CONTRACT NO. 89854	
							NOT TO SCALE / CADD STD. 406101-D4	FED. ROAD DIST. NO.	ILLINOIS	FED. AID PROJECT	

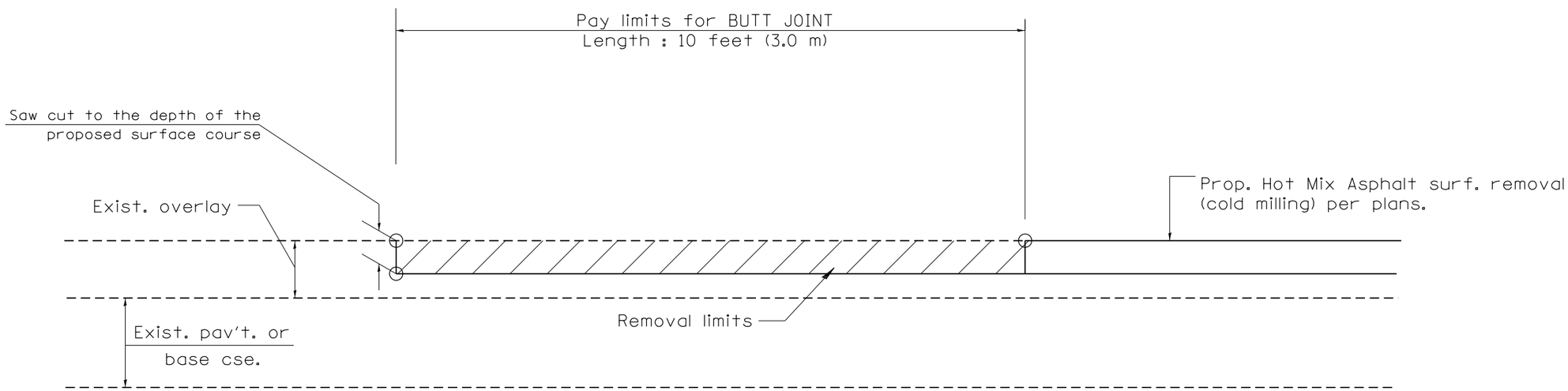

CASE 4 : SINGLE LIFT OVERLAY WITH EQUIVALENT DEPTH HOT MIX ASPHALT SURFACE REMOVAL (COLD MILLING) TIE-IN TO EXISTING BITUMINOUS TAPER

All dimensions are in inches (millimeters) unless otherwise noted.

STATE OF ILLINOIS
DEPARTMENT OF TRANSPORTATION

BUTT JOINTS

NOT TO SCALE

SHT. 3 OF 3
CADD STD. 406101-D4

F.A.S. RTE.	SECTION	COUNTY	TOTAL SHEETS	SHEET NO.
364	20-00091-03-BR	WOODFORD	114	81
		CONTRACT NO. 89854		
FED. ROAD DIST. NO.	ILLINOIS	FED. AID PROJECT		

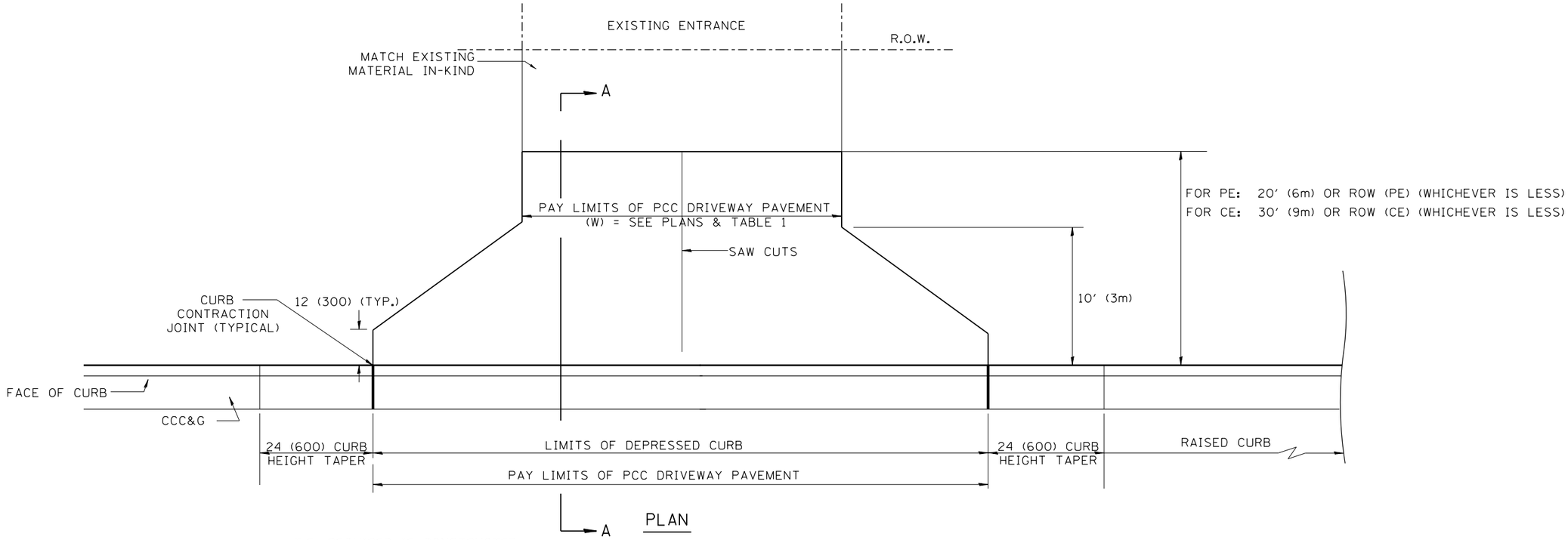

PLAN

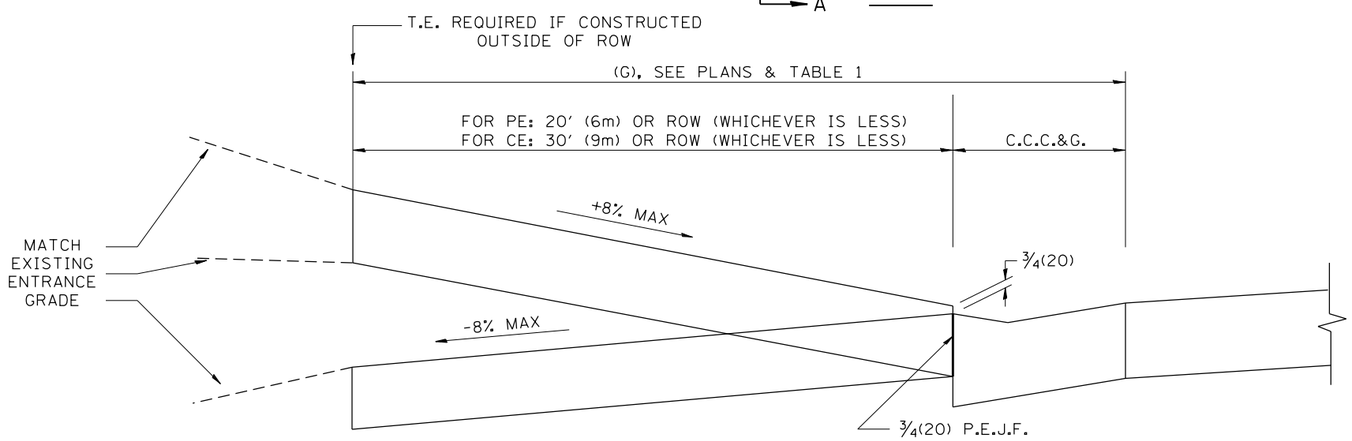

SECTION A-A

GENERAL NOTES

1. COMBINATION CONCRETE CURB & GUTTER SHALL BE DEPRESSED IN ACCORDANCE WITH STANDARD 606001.
2. C.C.C. & G. WILL BE MEASURED FOR PAYMENT AS SPECIFIED IN ARTICLE 606.13 OF THE STANDARD SPECIFICATIONS.
3. C.C.C. & G. CONSTRUCTION JOINTS WILL BE AS SHOWN ON STANDARD 606001.
4. EXCEPTIONS TO THE RADIUS FLARE/PROPERTY LINE RELATIONSHIP ARE AS SHOWN IN THE PLANS FOR COMMON ENTRANCES, WITH JOINTLY EXECUTED ACCESS PERMITS.

TABLE 1

URBAN ENTRANCE DESIGN CONTROLS

ELEMENT	NON-COMMERCIAL		COMMERCIAL			
			1-WAY OPERATION		2-WAY OPERATION	
WIDTH (W)	12' (3.6m)MIN.	24' (7.2m)MAX.	14' (4.3m)MIN.	24' (7.2m)MAX.	24' (7.2m)MIN.	35' (10.7m)MAX.
RADIUS EQUIVALENT 1:1 FLARE (F)	5' (1.5m)MIN.	25' (7.6m)MAX.	15' (4.6m)MIN.	40' (12.0m)MAX.	15' (4.6m)MIN.	40' (12.0m)MAX.
MAX. GRADE (G)	8%		6%			

All dimensions are in inches (millimeters) unless otherwise noted.

0-15-05	NEW DETAIL	M.M.A.
10-16-06	REVISED TO 2007 SPEC.	M.A.

STATE OF ILLINOIS
DEPARTMENT OF TRANSPORTATION

URBAN ENTRANCES WITHOUT SIDEWALKS

NOT TO SCALE

CADD STD. 423002-D4

F.A.S. RTE.	SECTION	COUNTY	TOTAL SHEETS	SHEET NO.
364	20-00091-03-BR	WOODFORD	114	82
		CONTRACT NO. 89854		
FED. ROAD DIST. NO.	ILLINOIS	FED. AID PROJECT		

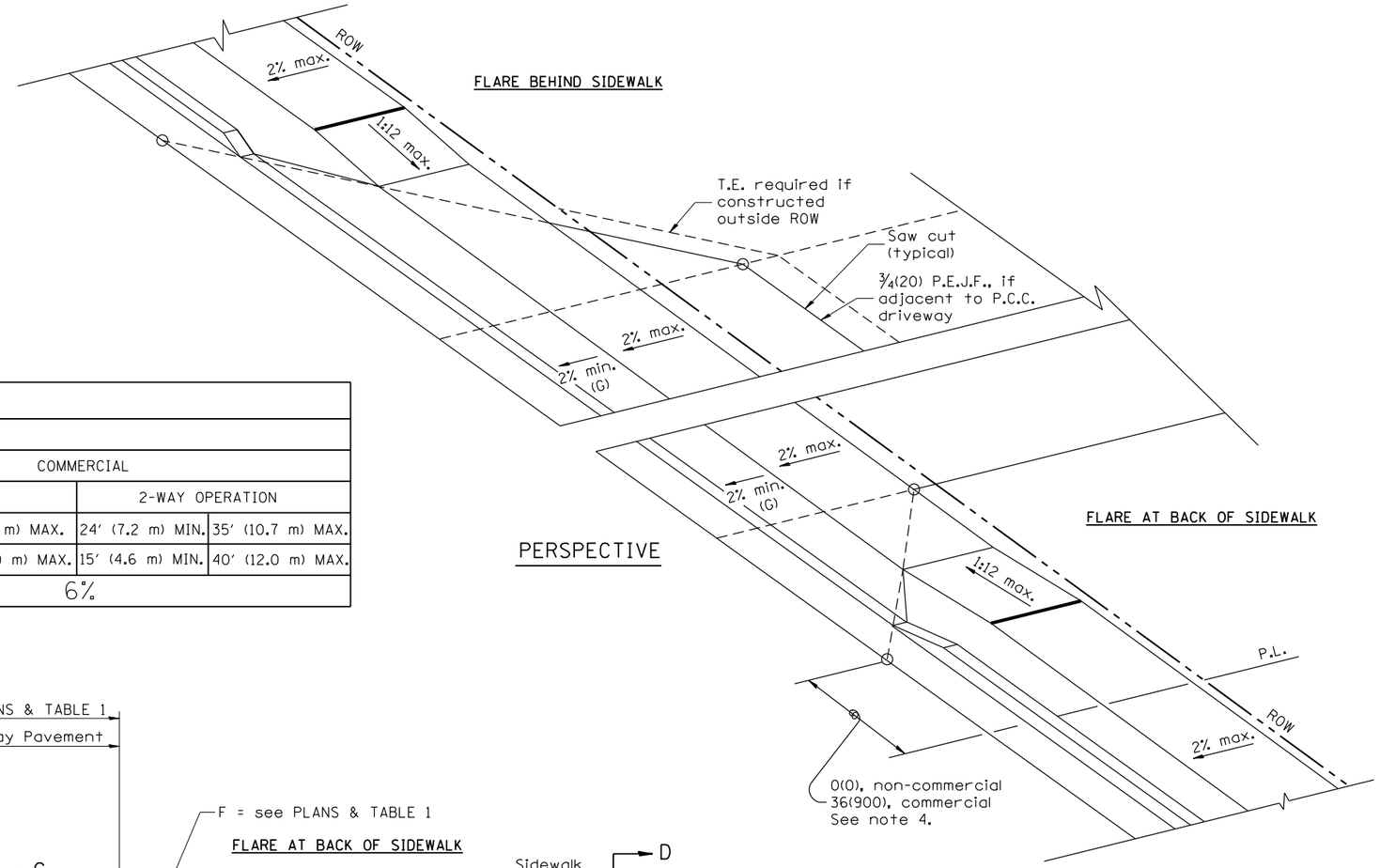

PERSPECTIVE

TABLE 1						
URBAN ENTRANCE DESIGN CONTROLS						
ELEMENT	NON-COMMERCIAL		COMMERCIAL			
			1-WAY OPERATION		2-WAY OPERATION	
WIDTH (W)	12′ (3.6 m) MIN.	24′ (7.2 m) MAX.	14′ (4.3 m) MIN.	24′ (7.2 m) MAX.	24′ (7.2 m) MIN.	35′ (10.7 m) MAX.
RADIUS EQUIVALENT 1:1 FLARE (F)	5′ (1.5 m) MIN.	25′ (7.6 m) MAX.	15′ (4.6 m) MIN.	40′ (12.0 m) MAX.	15′ (4.6 m) MIN.	40′ (12.0 m) MAX.
MAX. GRADE (G)	8%		6%			

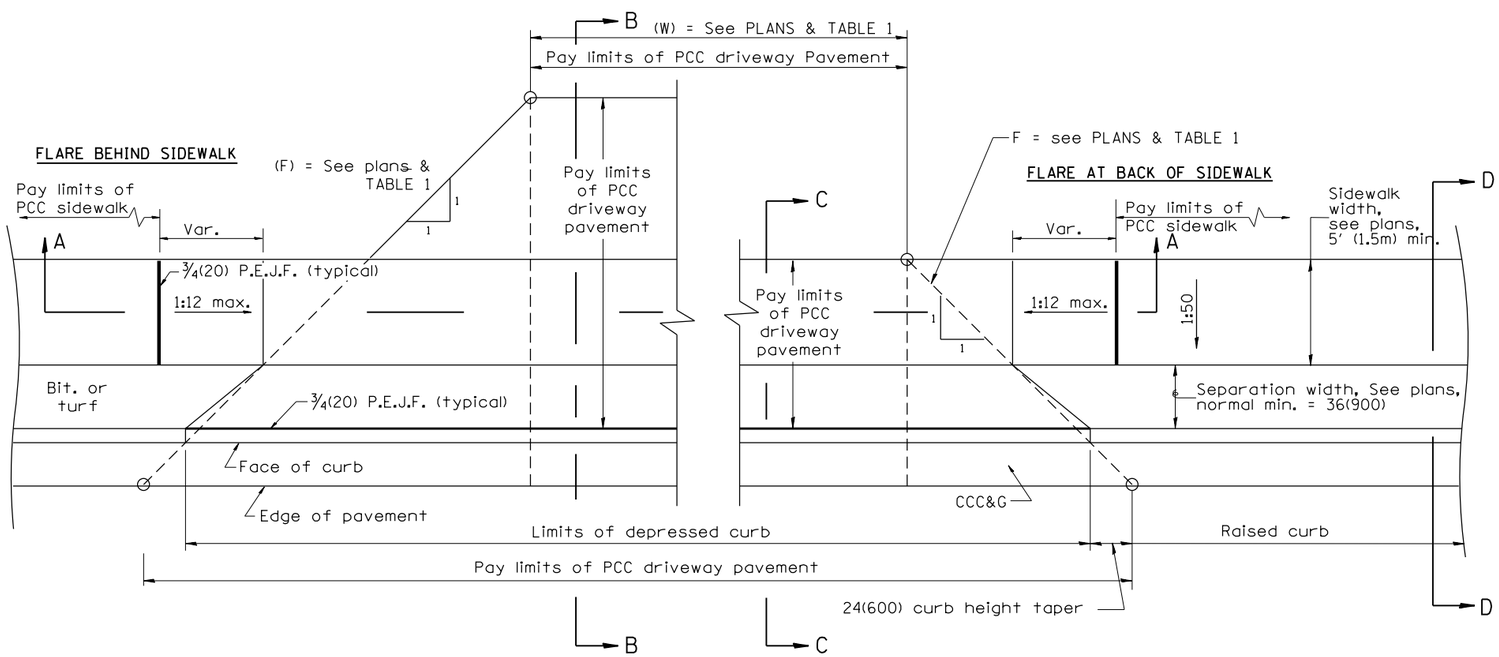

PLAN

GENERAL NOTES

1. The sidewalk area located within the pay limits of P.C.C. Driveway Pavement will be of the same thickness and construction as the P.C.C. Driveway Pavement.
2. Combination Concrete Curb & Gutter shall be depressed in accordance with Standard 606001.
3. Exceptions to the radius flare/property line relationship are as shown in the plans for common entrances, with jointly executed access permits.
4. Refer to State Standard 424026 for detectable warnings at busy commercial entrances.

All dimensions are in inches (millimeters) unless otherwise noted.

01-01-97	RENUM. C-103.01, NEW REVISION BOX	T.P.	03-15-12	REMOVED HATCHING ON RAMPS	R.D.
01-17-03	REMOVE CURB CONTRACTION	JATR			
09-15-05	JOINT	M.M.A.			
10-16-06	REVISED TO 2007 SPEC.	M.A.			

STATE OF ILLINOIS
DEPARTMENT OF TRANSPORTATION

URBAN ENTRANCES, ACCESSIBLE TO THE DISABLED, FOR SEPARATED SIDEWALKS

NOT TO SCALE

SHT. 1 OF 2
CADD STD. 423106-D4

F.A.S. RTE.	SECTION	COUNTY	TOTAL SHEETS	SHEET NO.
364	20-00091-03-BR	WOODFORD	114	83
		CONTRACT NO. 89854		
FED. ROAD DIST. NO.	ILLINOIS	FED. AID PROJECT		

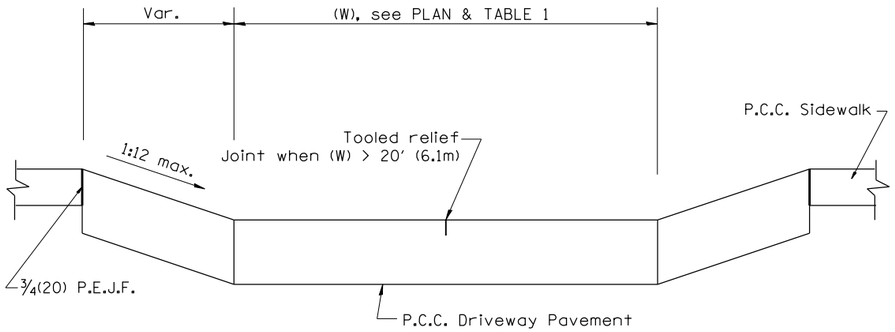

SECTION A-A

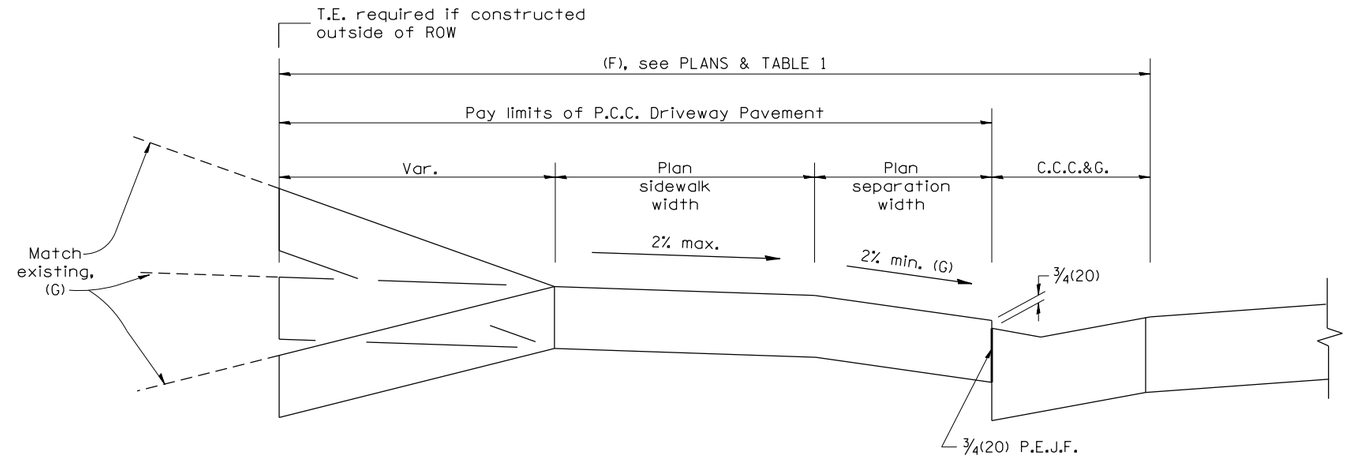

SECTION B-B

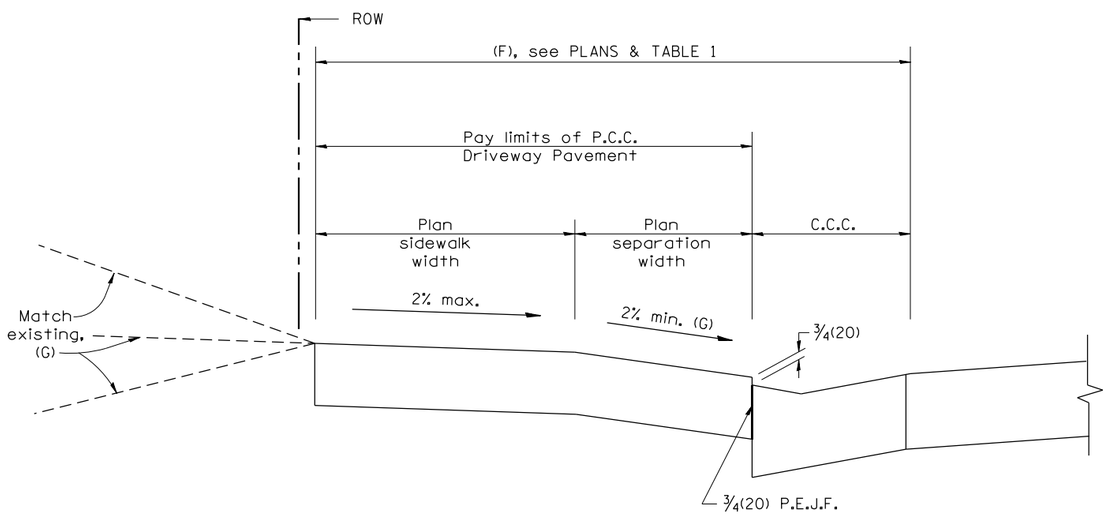

SECTION C-C

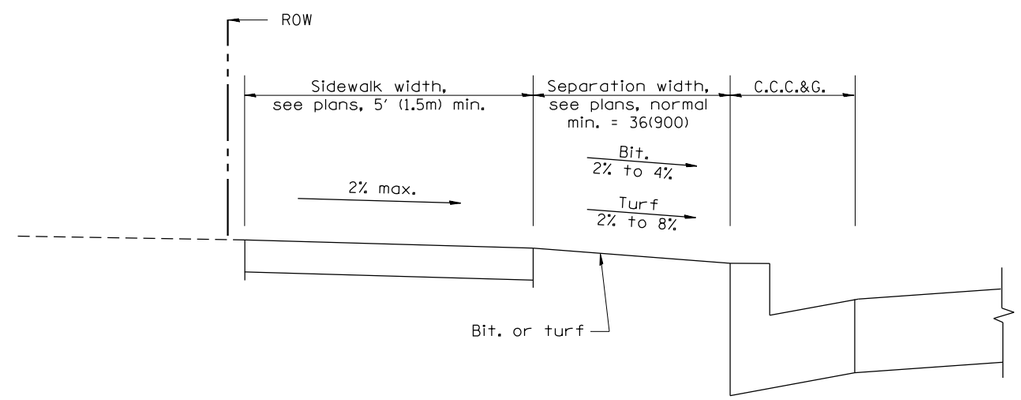

SECTION D-D

All dimensions are in inches (millimeters) unless otherwise noted.

STATE OF ILLINOIS
DEPARTMENT OF TRANSPORTATION

URBAN ENTRANCES, ACCESSIBLE TO THE DISABLED, FOR SEPARATED SIDEWALKS

NOT TO SCALE

SHT. 2 OF 2
CADD STD. 423106-D4

F.A.S. RTE.	SECTION	COUNTY	TOTAL SHEETS	SHEET NO.
364	20-00091-03-BR	WOODFORD	114	84
		CONTRACT NO. 89854		
FED. ROAD DIST. NO.	ILLINOIS	FED. AID PROJECT		

* MINIMUM 1' LAP ON U BARS

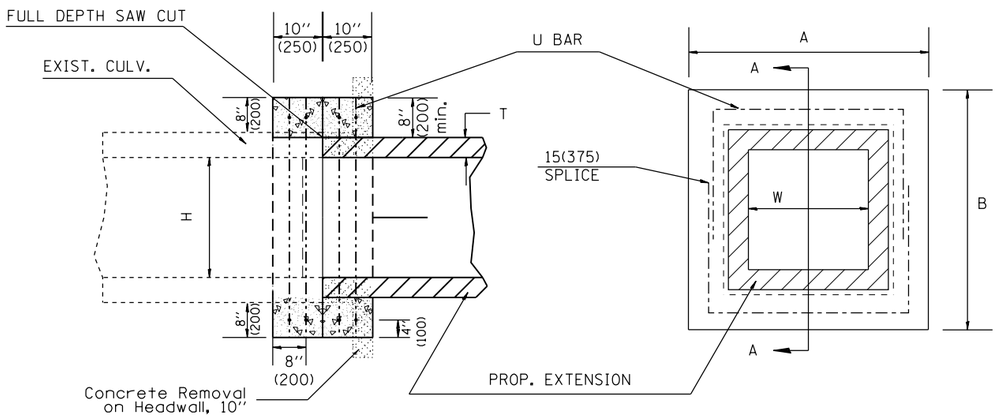

SECTION A - A

END VIEW

Existing Headwall Removal

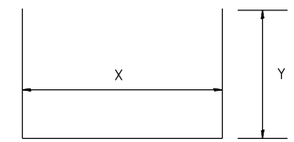

#4 U BAR
FOUR REQUIRED
PER COLLAR

GENERAL NOTES

1. The collar shall be constructed entirely of class SI concrete and in accordance with the applicable portions of section 503 of the Standard Specifications. Reinforcement bars shall conform to section 508.
2. Expansion bolts shall consist of approved expansions anchors, and ¾'' (M20) hook bolts which conform to Section 1006.09. These bolts shall extend at least 8''(200) into the new concrete.
3. This work will be paid for by the cubic yard (cubic meter) for CONCRETE COLLAR, by the pound (kg) for REINFORCEMENT BARS, and by Each for EXPANSION BOLTS of the size indicated.
4. Class SI quantity is only an estimate. Revise based on thickness of existing box wall thickness.

DIMENSIONS

EXISTING BOX		A	B	T	EACH COLLAR			
					CL SI	REINFORCEMENT BARS		
W ft (mm)	H ft (mm)				CU YD (m^3)	X	Y	POUNDS (kg)
2 (600)	2 (600)	4'-0'' (1.22m)	4'-0'' (1.22m)	4(100)	0.27(0.21)	3'-4'' (1.02m)	27.5(698)	21 (9.5)
3 (900)	2 (600)	5'-0'' (1.52m)	4'-0'' (1.22m)	4(100)	0.32(0.24)	4'-4'' (1.32m)	27.5(698)	24 (11)
3 (900)	2.5 (750)	5'-0'' (1.52m)	4'-6'' (1.37m)	4(100)	0.34(0.26)	4'-4'' (1.32m)	30.5(774)	25 (11.5)
3 (900)	3 (900)	5'-0'' (1.52m)	5'-0'' (1.52m)	4(100)	0.36(0.28)	4'-4'' (1.32m)	33.5(850)	26.5 (12)
3 (900)	4 (1200)	5'-2'' (1.57m)	6'-2'' (1.88m)	5(125)	0.41(0.31)	4'-6'' (1.37m)	40.5(1.03m)	30 (13.5)
4 (1200)	3 (900)	6'-2'' (1.88m)	5'-2'' (1.57m)	5(125)	0.41(0.31)	5'-6'' (1.68m)	34.5(876)	30 (13.5)
4 (1200)	4 (1200)	6'-2'' (1.88m)	6'-2'' (1.88m)	5(125)	0.45(0.34)	5'-6'' (1.68m)	40.5(1.03m)	33 (15)
4 (1200)	5 (1500)	6'-4'' (1.93m)	7'-4'' (2.24m)	6(150)	0.51(0.39)	5'-8'' (1.73m)	3'-11.5''(1.21m)	36 (16.5)
5 (1500)	4 (1200)	7'-4'' (2.24m)	6'-4'' (1.93m)	6(150)	0.51(0.39)	6'-8'' (2.03m)	3'-4.5''(1.05m)	36 (16.5)
5 (1500)	5 (1500)	7'-4'' (2.24m)	7'-4'' (2.24m)	6(150)	0.55(0.42)	6'-8'' (2.03m)	3'-11.5''(1.21m)	39 (17.5)
5 (1500)	6 (1800)	7'-6'' (2.29m)	8'-6'' (2.59m)	7(175)	0.60(0.46)	6'-10'' (2.08m)	4'-6.5''(1.38m)	42.5 (19)
6 (1800)	4 (1200)	8'-6'' (2.59m)	6'-6'' (1.98m)	7(175)	0.56(0.43)	7'-10'' (2.39m)	3'-6.5''(1.08m)	40 (18)
6 (1800)	5 (1500)	8'-6'' (2.59m)	7'-6'' (2.29m)	7(175)	0.60(0.46)	7'-10'' (2.39m)	4'-0.5''(1.23m)	42.5 (19)
6 (1800)	6 (1800)	8'-6'' (2.59m)	8'-6'' (2.59m)	7(175)	0.64(0.49)	7'-10'' (2.39m)	4'-6.5''(1.38m)	45 (20.5)
6 (1800)	8 (2400)	8'-8'' (2.64m)	10'-8'' (3.25m)	8(200)	0.74(0.57)	8'-0'' (2.44m)	5'-7.5''(1.71m)	51.5 (23)
8 (2400)	8 (2400)	10'-8'' (3.25m)	10'-8'' (3.25m)	8(200)	0.82(0.63)	10'-0'' (3.05m)	5'-7.5''(1.71m)	57 (26)

QUANTITIES

CALC. BY: _____ DATE:

CHECKED BY: _____ DATE:

QUANTITY CALCULATIONS ARE ON FILE AT THE DISTRICT 4 OFFICE; BUREAU OF PROJECT IMPLEMENTATION; DOCUMENTATION SECTION

All dimensions are in inches (millimeters) unless otherwise noted.

2-15-11	NEW STANDARD	R.D.

STATE OF ILLINOIS
DEPARTMENT OF TRANSPORTATION

COLLAR FOR BOX CULVERT EXTENSIONS WITH HEADWALL REMOVAL

NOT TO SCALE

CADD STD. 540002-D4

F.A.S. RTE.	SECTION	COUNTY	TOTAL SHEETS	SHEET NO.
364	20-00091-03-BR	WOODFORD	114	85
		CONTRACT NO. 89854		
FED. ROAD DIST. NO.	ILLINOIS	FED. AID PROJECT		

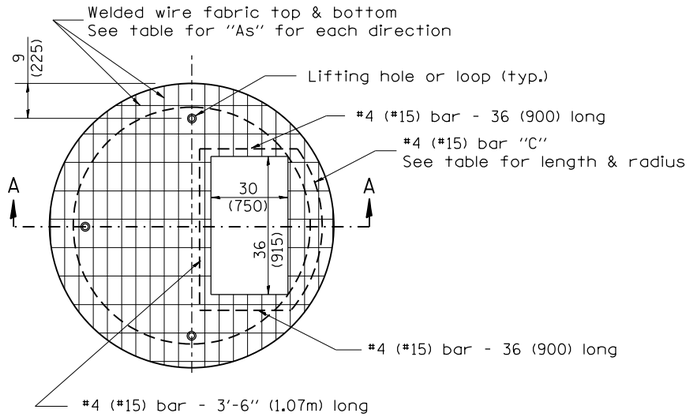

PLAN

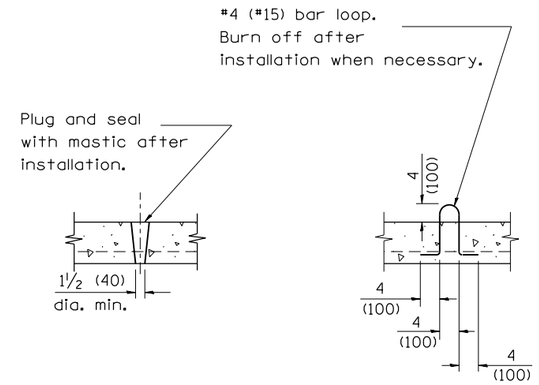

LIFTING HOLE OR LIFTING LOOP
TYPICAL

(3 required per slab)

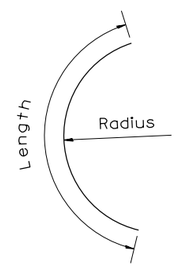

BAR "C"

TABLE

D	T	D_o (min.)	t	Reinforcement "As" W.W.F. each direction	Bar size	No. 15 (No. 4) Bar C	
						Length	Radius
4' (1.2m)	5 (125)	4'-10" (1.5m)	6 (150)	0.70 sq. inch/lin. ft. (1480mm ²/m)	No. 15 (No. 5)	1.35m (4'-6")	660 (26)
5' (1.5m)	6 (150)	6'-0" (1.8m)	8 (200)	0.70 sq. inch/lin. ft. (1480mm ²/m)	No. 15 (No. 5)	1.5m (5'-0")	810 (32)
6' (1.8m)	7¾ (195)	7'-3½" (2.2m)	8 (200)	0.88 sq. inch/lin. ft. (1860mm ²/m)	No. 20 (No. 6)	1.8m (6'-0")	965 (38)
8' (2.4m)	9 (225)	9'-6" (2.9m)	10 (250)	0.88 sq. inch/lin. ft. (1860mm ²/m)	No. 20 (No. 6)	2.3m (7'-6")	1.27m (4'-2")

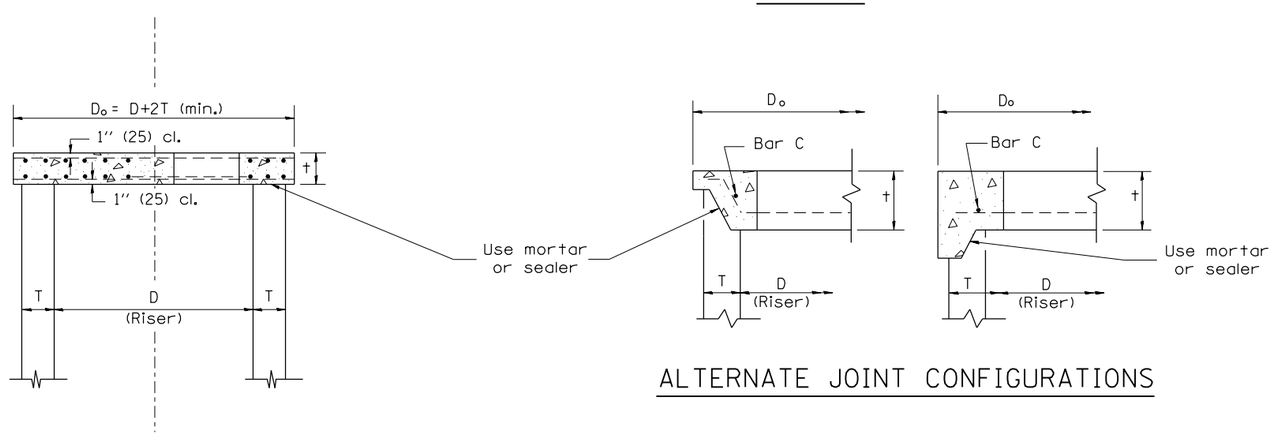

SECTION A-A

ALTERNATE JOINT CONFIGURATIONS

GENERAL NOTES

1. The precast reinforced concrete flat slab top shall be used with INLET-MANHOLE, TYPE G-1 and INLET-MANHOLE, TYPE G-1, SPECIAL.
2. Joint configuration and dimensions of flat slab top shall match and fit the riser joint detail.
3. Lifting devices shall be approved by the Engineer.

All dimensions are in inches (millimeters) unless otherwise noted.

01-01-97	RENUM. B-4.07. NEW REVISION BOX	T.P.
10-16-06	REVISED TO 2007 SPEC.	M.A.

STATE OF ILLINOIS
DEPARTMENT OF TRANSPORTATION

PRECAST REINFORCED CONCRETE FLAT SLAB TOP FOR INLET-MANHOLE, TYPE G-1 AND TYPE G-1, SPECIAL

NOT TO SCALE

CADD STD. 602101-D4

F.A.S. RTE.	SECTION	COUNTY	TOTAL SHEETS	SHEET NO.
364	20-00091-03-BR	WOODFORD	114	86
		CONTRACT NO. 89854		
FED. ROAD DIST. NO.	ILLINOIS	FED. AID PROJECT		

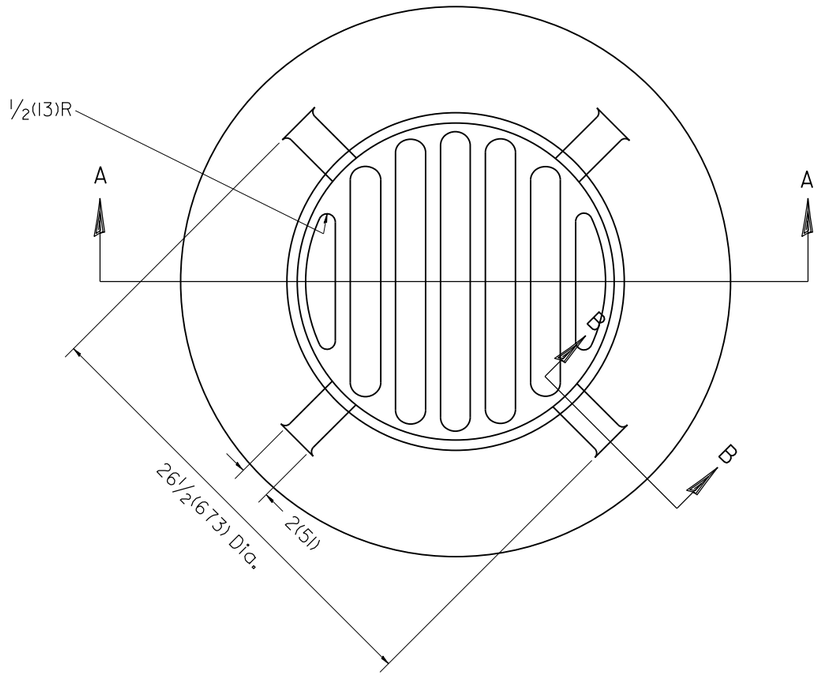

PLAN

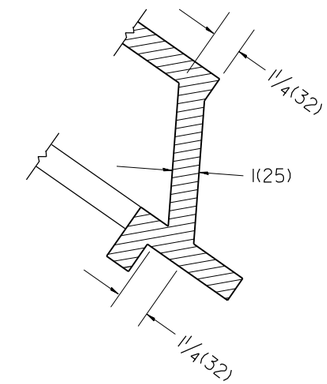

SECTION B - B

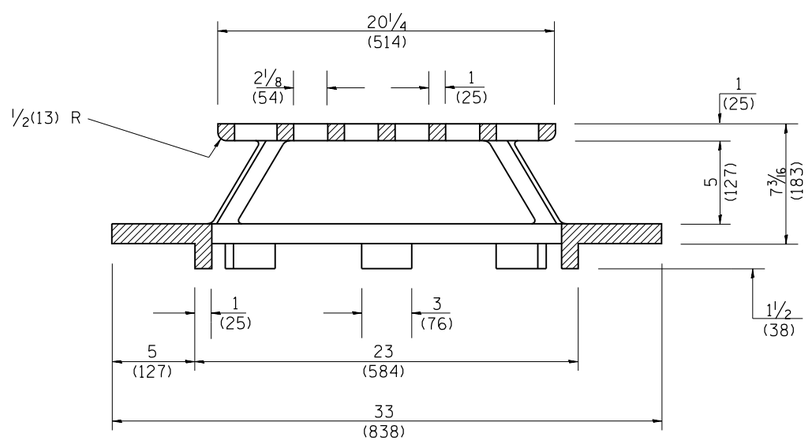

SECTION A - A

GENERAL NOTES

1. MATERIAL - Cast Gray Iron
   Weight 209 lbs (95 kg)

All dimensions are in inches (millimeters) unless otherwise noted.

01-01-97	RENUM. B-10.02, NEW REVISION BOX	T.P.
10-16-06	REVISED TO 2007 SPEC.	M.A.

STATE OF ILLINOIS
DEPARTMENT OF TRANSPORTATION

TYPE 37 GRATE

NOT TO SCALE

CADD STD. 604301-D4

F.A.S. RTE.	SECTION	COUNTY	TOTAL SHEETS	SHEET NO.
364	20-00091-03-BR	WOODFORD	114	87
		CONTRACT NO. 89854		

FED. ROAD DIST. NO. | ILLINOIS | FED. AID PROJECT

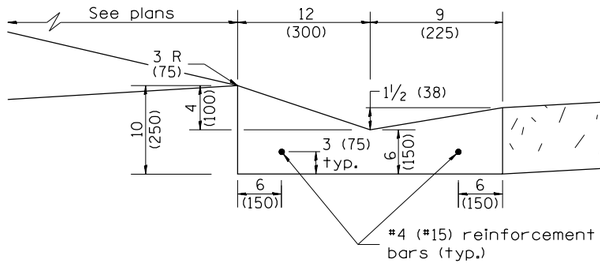

SHOULDER EDGE GUTTER

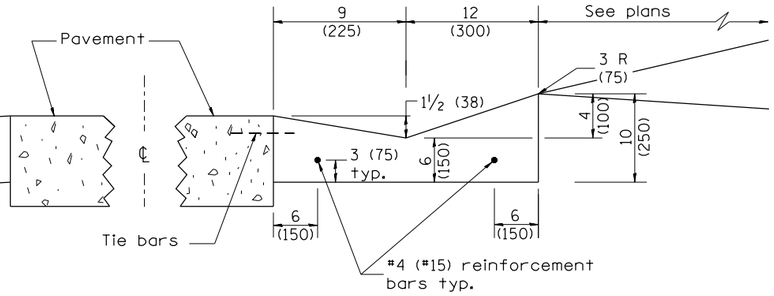

PAVEMENT EDGE GUTTER

CONCRETE GUTTER, TYPE B, (SPECIAL)

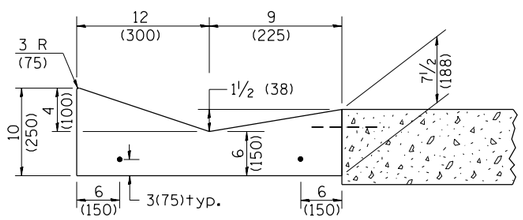

SECTION A-A

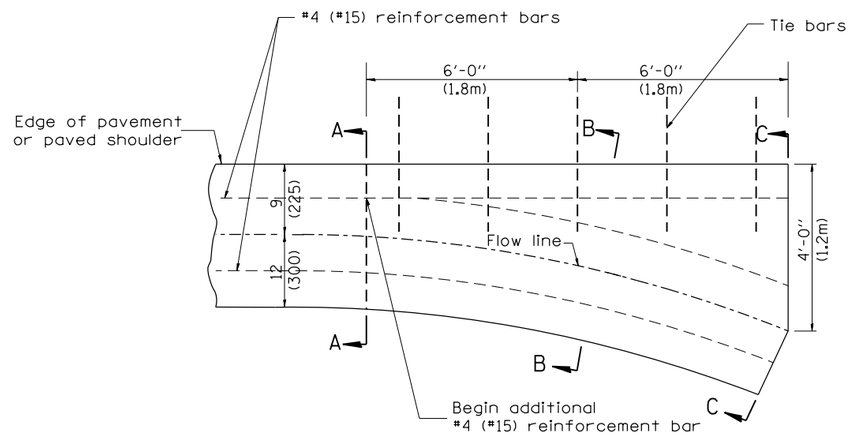

PLAN

QUANTITY

Section C-C to A-A=
0.73 cu. yd. concrete.

GENERAL NOTES:

1. CONCRETE GUTTER, TYPE B (SPECIAL) shall conform to the the applicable portions of Section 606.
2. Tie bars shall be No. 6x24 (No. 19x600) at 36" (900mm) centers unless otherwise shown.
3. Gutter, gutter inlets, gutter outlets, and gutter entrances shall be tied to rigid pavement in accordance with details shown on Standard 420001.
4. Joints shall be constructed in accordance with Article 606.06.
5. Welded wire fabric shall conform to Article 1006.10(c)(1), and shall not be less than 58 lbs/100 sq.ft. (2.83 kg/m²).

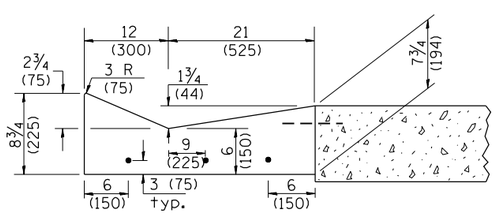

SECTION B-B

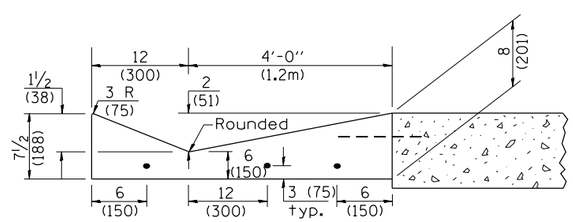

SECTION C-C

INLET

QUANTITIES
CALC. BY: _____ DATE:
CHECKED BY: _____ DATE:
QUANTITY CALCULATIONS ARE ON FILE AT THE DISTRICT 4 OFFICE; BUREAU OF PROJECT IMPLEMENTATION; DOCUMENTATION SECTION

All dimensions are in inches (millimeters) unless otherwise noted.

01-01-97	RENUM. A-1.01, NEW REVISION BOX, ELIMINATED	T.P.	10-16-06	REVISED TO 2007 SPEC.	M.A.
	EXPANSION ANCHOR TIES		11-16-07	REVISED QUANTITY	M.A.
03-06-98	CORRECT DIMENSIONING	J.A.	02-15-11	CHANGED MODIFIED TO SPECIAL	R.D.
03-10-06	REVISED QUANTITY	M.A.	01-31-18	REVISED TIE BAR SIZE & SPACING	R.D.

STATE OF ILLINOIS
DEPARTMENT OF TRANSPORTATION

CONCRETE GUTTER, TYPE B, (SPECIAL)
(INLET, OUTLET & ENTRANCE)

NOT TO SCALE

SHT. 1 OF 3
CADD STD. 606201-D4

F.A. RTE.	SECTION	COUNTY	TOTAL SHEETS	SHEET NO.
364	20-00091-03-BR	WOODFORD	114	88
		CONTRACT NO. 89854		
FED. ROAD DIST. NO.	ILLINOIS	FED. AID PROJECT		

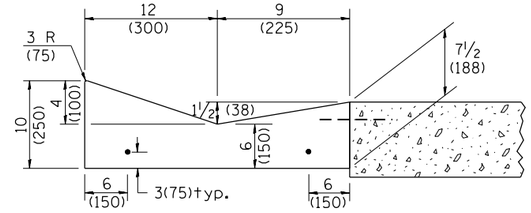

SECTION A-A

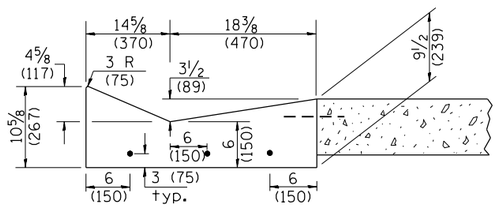

SECTION B-B

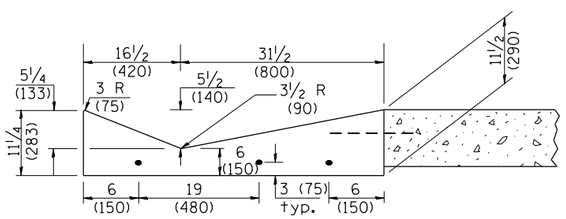

SECTION C-C

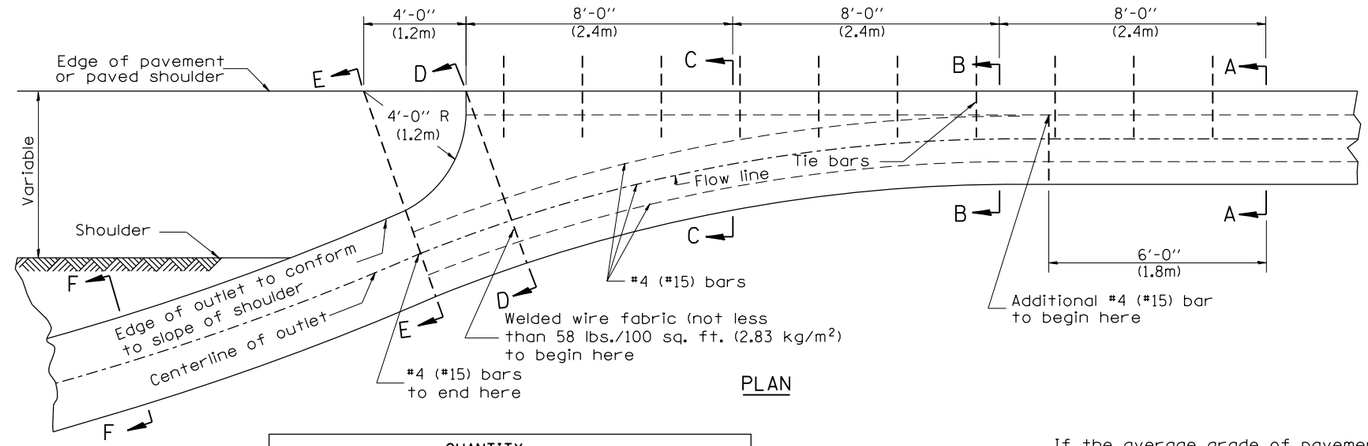

PLAN

QUANTITY

Section A-A to E-E= 2.81 cu. yd. concrete.
Section E-E to F-F= 0.09 cu. yd./ft. concrete.

If the average grade of pavement for the distance from section A-A to section D-D exceeds 2%, this distance shall be increased 6 ft. (1.8m) for each 1% increase in grade. A quantity adjustment is required.

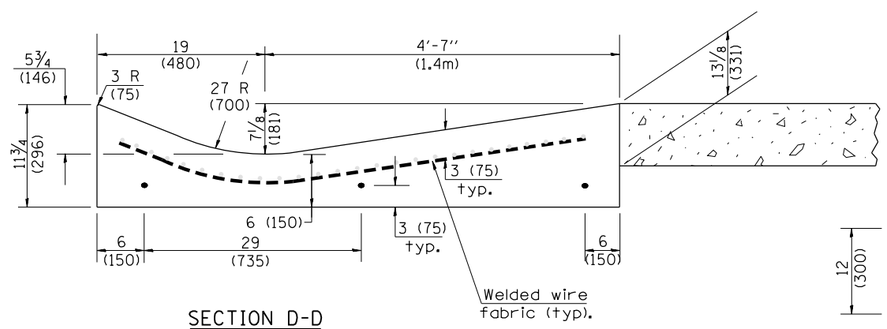

SECTION D-D

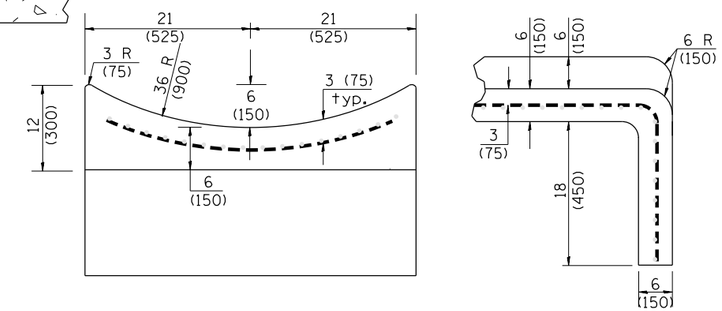

SECTIONS AT END OF OUTLET
(CURTAIN WALL)

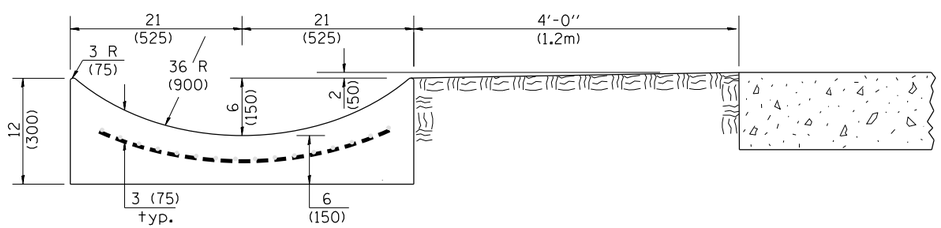

SECTION E-E

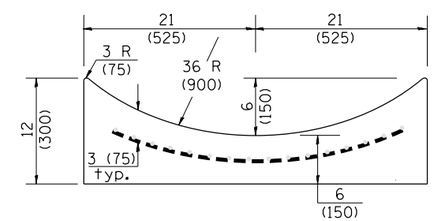

SECTION F-F

QUANTITY

Curtain Wall =
0.1 cu. yd. concrete.

QUANTITIES
CALC. BY: _____ DATE:
CHECKED BY: _____ DATE:
QUANTITY CALCULATIONS ARE ON FILE AT THE DISTRICT 4 OFFICE; BUREAU OF PROJECT IMPLEMENTATION; DOCUMENTATION SECTION

OUTLET

All dimensions are in inches (millimeters) unless otherwise noted.

STATE OF ILLINOIS
DEPARTMENT OF TRANSPORTATION

NOT TO SCALE

CONCRETE GUTTER, TYPE B, (SPECIAL)
(INLET, OUTLET & ENTRANCE)

SHT. 2 OF 3
CADD STD. 606201-D4

F.A. RTE.	SECTION	COUNTY	TOTAL SHEETS	SHEET NO.
364	20-00091-03-BR	WOODFORD	114	89
		CONTRACT NO. 89854		
FED. ROAD DIST. NO.	ILLINOIS	FED. AID PROJECT		

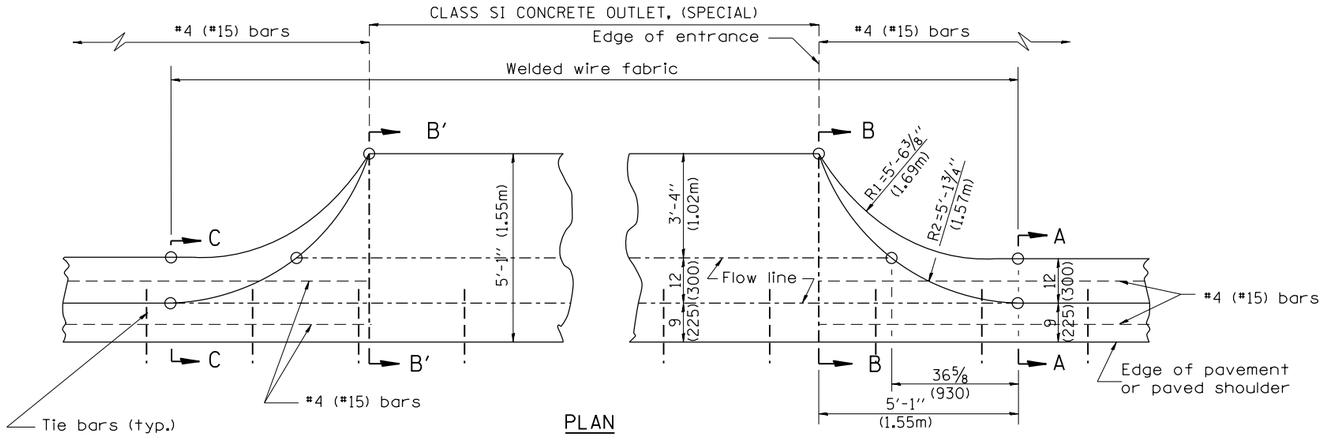

PLAN

TYPICAL URBAN ENTRANCE

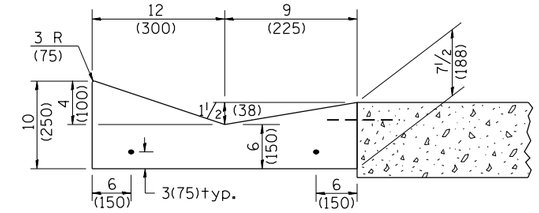

SECTION A-A & C-C

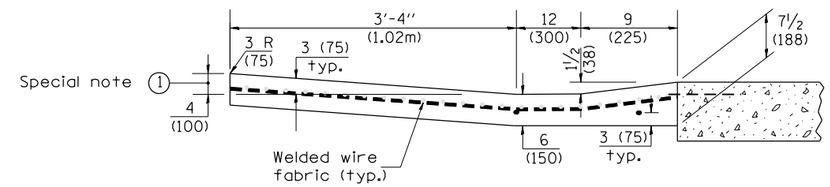

SECTION B-B & B′-B′

QUANTITY
URBAN ENTRANCE

Section B′-B′ to B-B=
0.1 cu. yd./ft.
Section C-C to B′-B′ + B-B to A-A=
0.69 cu. yd.

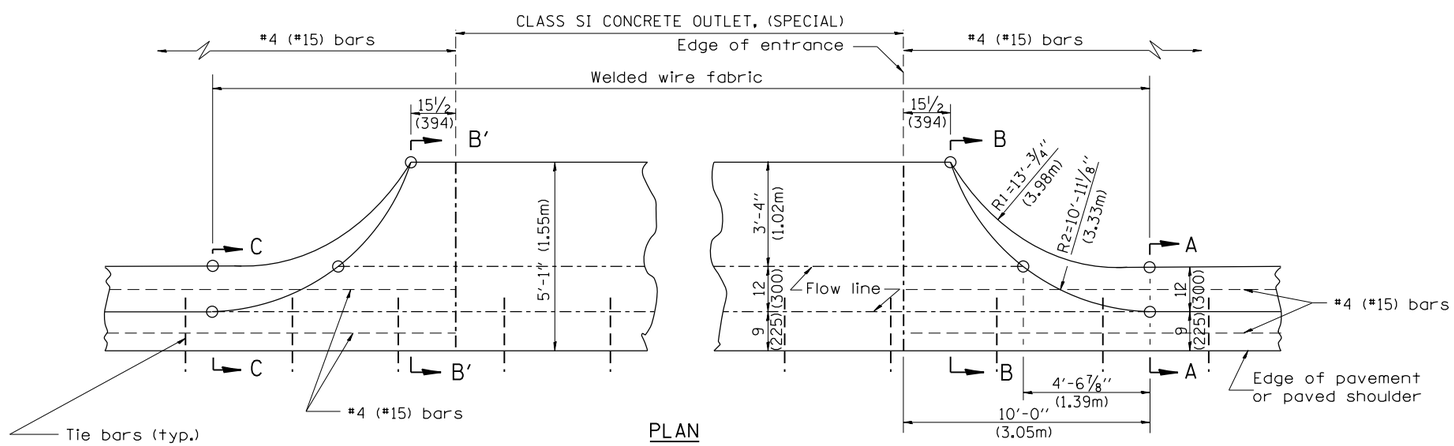

PLAN

TYPICAL RURAL ENTRANCE

SPECIAL NOTES:

1. 4 (100) is the normal dimension. If specified in the plans, the following shall be used for improved entrance match-up: Minimum - 2 1/2 (65)
   Maximum - 5 (125)

QUANTITY
RURAL ENTRANCE

Section B′-B′ to B-B=
0.1 cu. yd./ft.
Section C-C to B′-B′ + B-B to A-A=
1.19 cu. yd.

QUANTITIES

CALC. BY: _____ DATE:
CHECKED BY: _____ DATE:

QUANTITY CALCULATIONS ARE ON FILE AT THE DISTRICT 4 OFFICE; BUREAU OF PROJECT IMPLEMENTATION; DOCUMENTATION SECTION

All dimensions are in inches (millimeters) unless otherwise noted.

STATE OF ILLINOIS
DEPARTMENT OF TRANSPORTATION

CONCRETE GUTTER, TYPE B, (SPECIAL)
(INLET, OUTLET & ENTRANCE)

NOT TO SCALE

SHT. 3 OF 3
CADD STD. 606201-D4

F.A.S. RTE.	SECTION	COUNTY	TOTAL SHEETS	SHEET NO.
364	20-00091-03-BR	WOODFORD	114	90
		CONTRACT NO. 89854		
FED. ROAD DIST. NO.	ILLINOIS	FED. AID PROJECT		

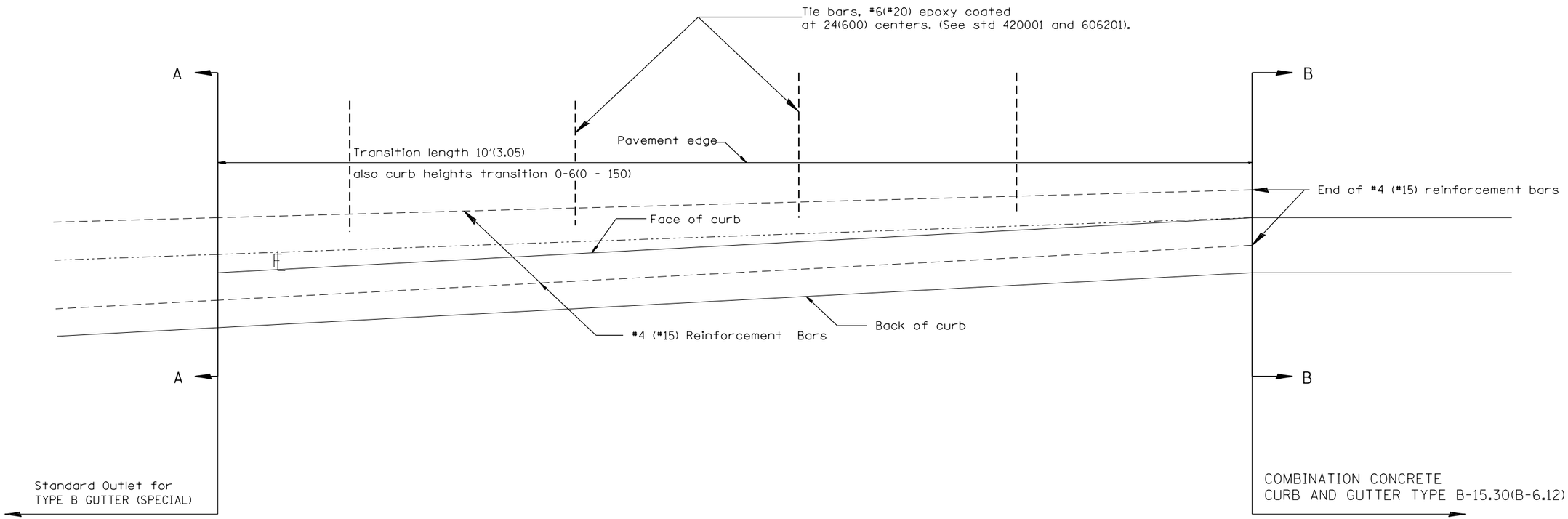

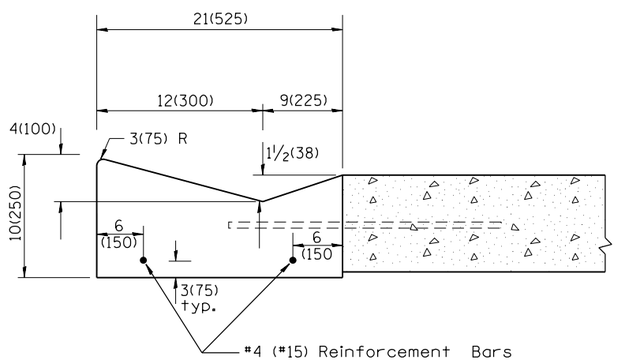

SECTION A - A

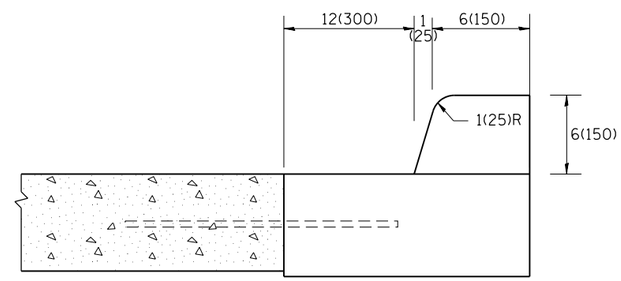

SECTION B - B

GENERAL NOTES:

1. Tie bars shall be constructed in accordance with details for BULKHEAD LONGITUDINAL CONSTRUCTION JOINT shown on Standard 420001.
2. Adjacent to sound existing p.c.c. pavement, tie bars shall installed in drilled holes in accordance with article 420.10(b).
3. Construction and expansion joints shall be installed in prolongation with joints in the pavement. Joint shall be constructed in accordance with the aplicable portion of Art. 606.06 of the Standard Specifications.

All dimensions are in inches (millimeters) unless otherwise noted.

01-01-97	RENUM. A-7.11, METRICS, NEW REVISION BOX, REVISED	T.P.
	GENERAL NOTES, ELIMINATED EXPANSION TIE ANCHORS	
10-16-06	REVISED TO 2007 SPEC.	M.A.
02-15-11	CHANGED MODIFIED TO SPECIAL	R.D.

STATE OF ILLINOIS
DEPARTMENT OF TRANSPORTATION

TRANSITION FROM CONCRETE CURB AND GUTTER TYPE B-6.12 (B-15.30) TO OUTLET FOR TYPE B GUTTER (SPECIAL)

NOT TO SCALE — CADD STD. 606206-D4

F.A.S. RTE.	SECTION	COUNTY	TOTAL SHEETS	SHEET NO.
364	20-00091-03-BR	WOODFORD	114	91
		CONTRACT NO. 89854		
FED. ROAD DIST. NO.	ILLINOIS	FED. AID PROJECT		

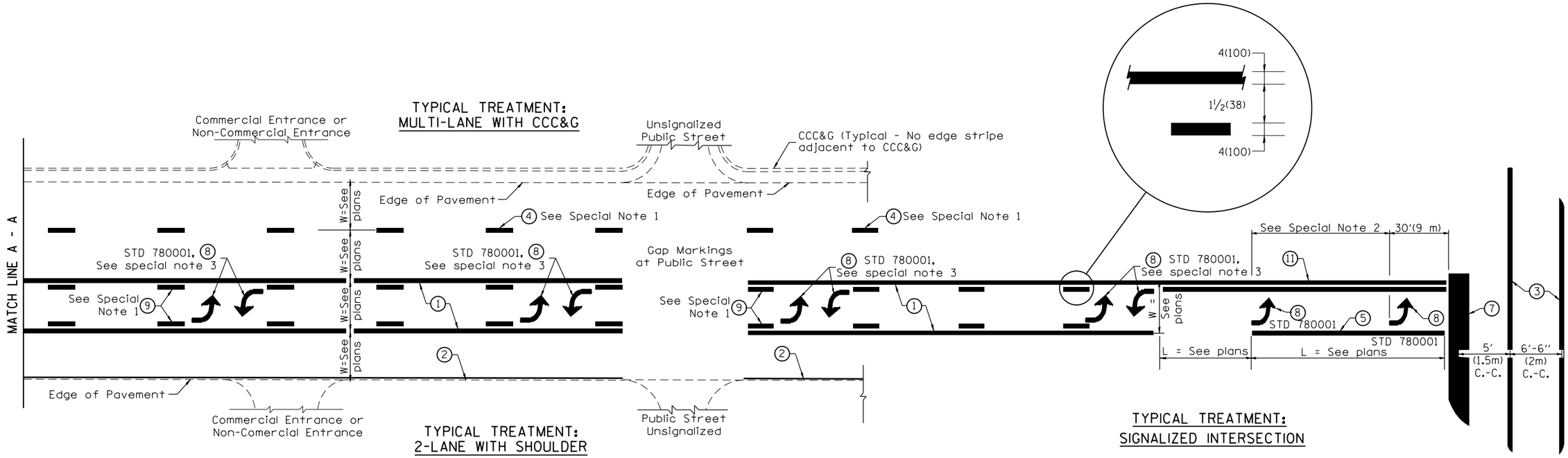

FLUSH PAVED MEDIAN: TWO-WAY LEFT TURN LANE WITH ONE-WAY LEFT TURN LANE AT SIGNALIZED INTERSECTION

TYPICAL PAVEMENT MARKING LEGEND

(Note: This is a District Standard Legend.
Some elements may not apply to specific project.)

1. 4(100) Solid (Yellow)
2. 4(100) Solid (White)
3. 2-6(150) Crosswalk @ 6'-6" (2m)min C.-C. (White)
   2-8(200) Crosswalk @ 6'-6" (2m)min C.-C. (White) (When traffic signals are present.)
4. 6(150) Skip-Dash (White) — 10' (3.05m) / 30' (9.14m) / 10' (3.05m) (See Special Note 1)
5. 8(200) Solid (White)
6. 12(300) Diagonal (White) (Item 6 is shown on Std. 780001)
7. 24(600) Stop Bar (White)
8. Letters & Arrows — 33' (10m) (See Std. 780001 and Special Notes 2 & 3)
9. 4(100) Skip-Dash (Yellow) — 10' (3.05m) / 30' (9.14m) / 10' (3.05m) (See Special Note 1)
10. 12(300) Diagonal (Yellow) (See Table A) — 45°
11. 4(100) Double Solid (Yellow) — 11(280) C.-C. — See Table A

SPECIAL NOTES

1. Skip-Dash markings will be centered between both ends of city blocks and shall be placed in alignment transversely across the pavement.
2. The following shall apply to arrows located in one-way left turn lanes:
   A. A minimum of two (2) arrows is required.
   B. The maximum spacing between arrows is 80' (24 m).
   C. Arrows shall be evenly spaced if three (3) or more are required.
3. The following shall apply to arrow pairs located in two-way left turn lanes:
   A. A minimum of two (2) arrow pairs is required.
   B. The maximum spacing between arrow pairs is 200' (61 m).
   C. Arrow pairs shall be evenly spaced if three (3) or more are required.
   D. The spacing between Bi Directional Left Turn Arrows is 33' (10 m).

GENERAL NOTES

1. Refer to State Standard 780001 for additional Pavement Markings including letters & arrows.
2. See Plans for Pavement Markings adjacent to curbed islands and medians, and through lane reductions.
3. Refer to Article 780.13 for letter, number and symbol areas (sq. ft.)
4. Areas are grooved 1" beyond each edge for the following symbols:
   Through Arrow= 14.8 sq. ft.
   Large Left or Right Arrow= 21.9 sq. ft.
   2 Arrow Combination Left (or Right) and Through= 34.9 sq. ft.
   Wrong Way Arrow= 29.5 sq. ft.
   Railroad Crossing Symbol= 69.8 sq. ft.
   (For further information, refer to BDE Special Provision: Grooving for Recessed Pavement Markings)

01-01-97	RENUM. F-8.03, NEW REVISION BOX	T.P.	10-16-06	REVISED TO 2007 SPEC.	
02-07-97	ADD BI DIRECTIONAL DIMENSION	J.A.	2/29/16	ADDED GROOVING AREAS	R.D.
10-97	CORRECT BI DIRECTIONAL DIMENSION	J.A.	07-16-19	SPELLING CORRECTIONS	R.D.
08-02	ADD CROSSWALK DMNS. WITH T.S.	M.A.			

STATE OF ILLINOIS
DEPARTMENT OF TRANSPORTATION

TYPICAL PAVEMENT MARKINGS

NOT TO SCALE

SHT. 1 OF 2
CADD STD. 780001-D4

F.A.S. RTE.	SECTION	COUNTY	TOTAL SHEETS	SHEET NO.
364	20-00091-03-BR	WOODFORD	114	92

CONTRACT NO. 89854

FED. ROAD DIST. NO. | ILLINOIS | FED. AID PROJECT

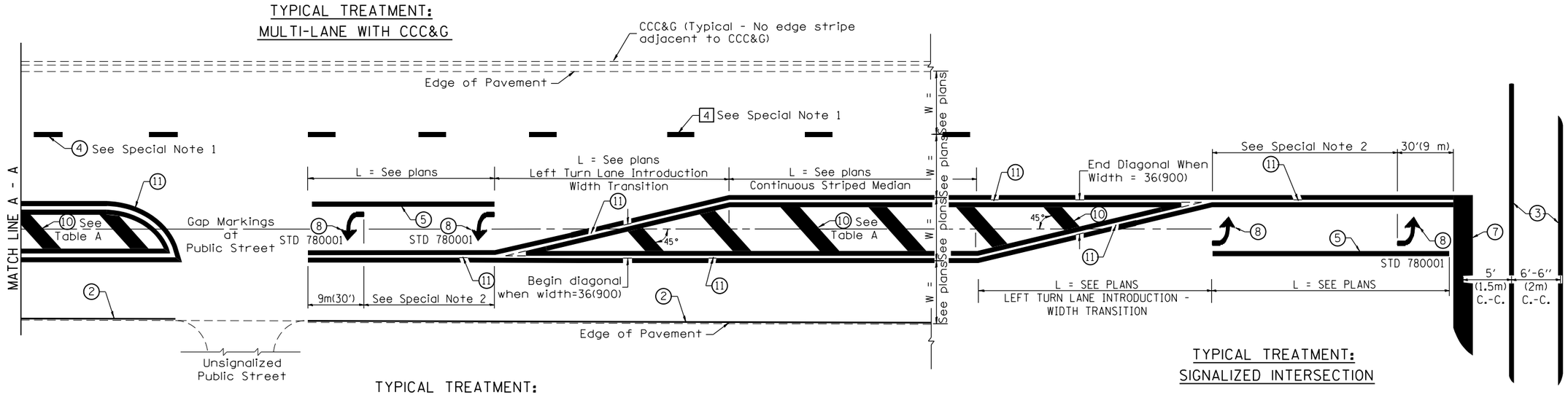

FLUSH PAVED MEDIAN: RESTRICTED LEFT TURN LANE

TABLE A

RECOMMENDED SPACING BETWEEN DIAGONAL LINES

SPEED LIMIT RANGE	CONTINUOUS	INTERSECTION CHANNELIZATION (Includes Width Transitions for Median and Left Turn Lane Introductions)
Less Than 30 mph (50 km/h)	50' (15m)	15' (5m)
30 - 45 mph (50 - 70 km/h)	75' (23m)	20' (6m)
Over 45 mph (70 km/h)	150' (46m)	30' (9m)

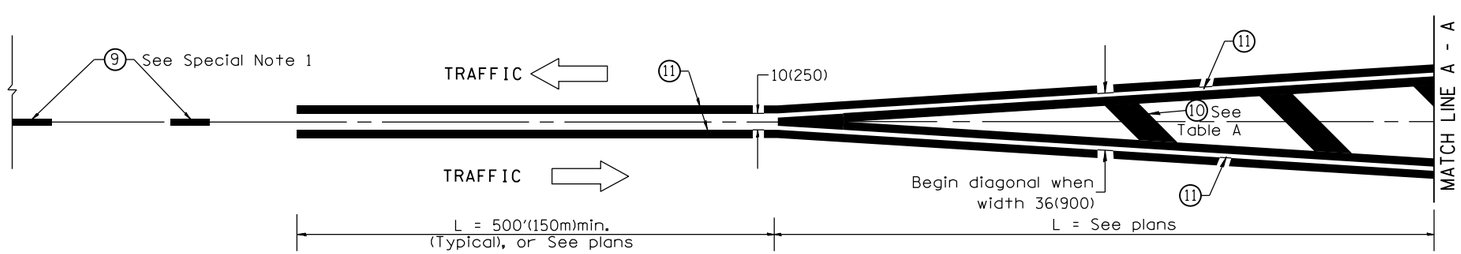

MEDIAN INTRODUCTION - WIDTH TRANSITIONS

All dimensions are in inches (millimeters) unless otherwise noted.

STATE OF ILLINOIS
DEPARTMENT OF TRANSPORTATION

TYPICAL PAVEMENT MARKINGS

NOT TO SCALE

SHT. 2 OF 2
CADD STD. 780001-D4

F.A.S. RTE.	SECTION	COUNTY	TOTAL SHEETS	SHEET NO.
364	20-00091-03-BR	WOODFORD	114	93
		CONTRACT NO. 89854		
FED. ROAD DIST. NO.	ILLINOIS	FED. AID PROJECT		

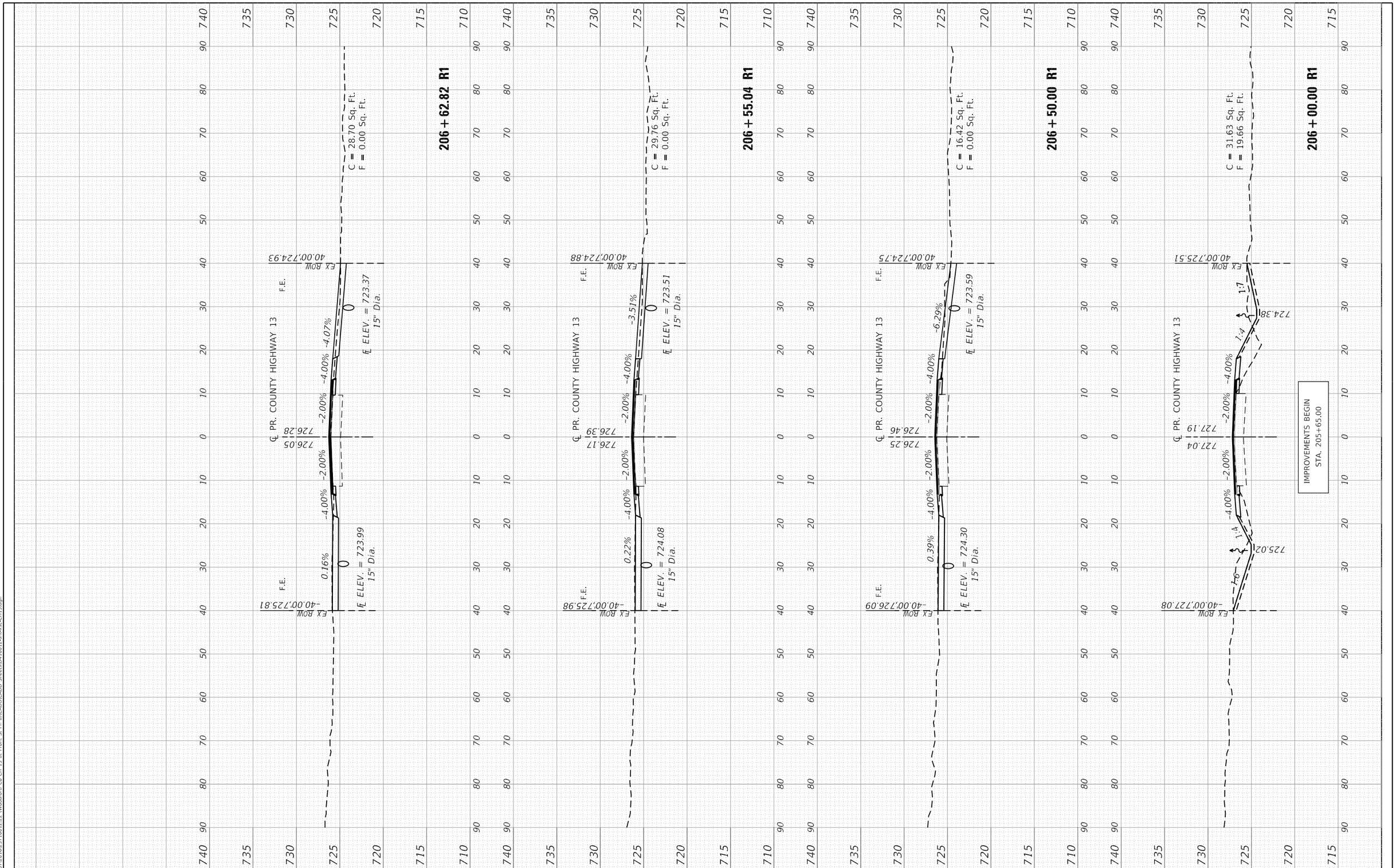

FINAL SURVEY		BY	DATE
NOTE BOOK	SURVEYED		
	PLOTTED		
	TEMPLATE		
	AREAS		
NO.	AREAS CHECKED		

ORIGINAL SURVEY		BY	DATE
NOTE BOOK	SURVEYED		
	PLOTTED		
	TEMPLATE		
	AREAS		
NO.	AREAS CHECKED		

MODEL: RCLPCH13A
FILE NAME: S:\2372\2016\2371602\22 (Woodford Co CH 13 at Front St Ph III\CADD\CADD Sheets\D416012-sht-xsc-CH13.dgn

MAURER-STUTZ
ENGINEERS SURVEYORS

USER NAME = jdspiller	DESIGNED - CLD	REVISED -
	DRAWN - CAD	REVISED -
PLOT SCALE = 20.0000 ' / in.	CHECKED - JDS	REVISED -
PLOT DATE = 11/12/2024	DATE - 10/18/2024	REVISED -

WOODFORD COUNTY
HIGHWAY DEPARTMENT

COUNTY HIGHWAY 13 RECONSTRUCTION AT FRONT ST.
CROSS SECTIONS – COUNTY HIGHWAY 13

SCALE: | SHEET 1 OF 14 SHEETS | STA.206+00.00 R1 TO STA. 206+62.82 R1

F.A.S. RTE.	SECTION	COUNTY	TOTAL SHEETS	SHEET NO.
364	20-00091-03-BR	WOODFORD	114	94
		CONTRACT NO. 89854		

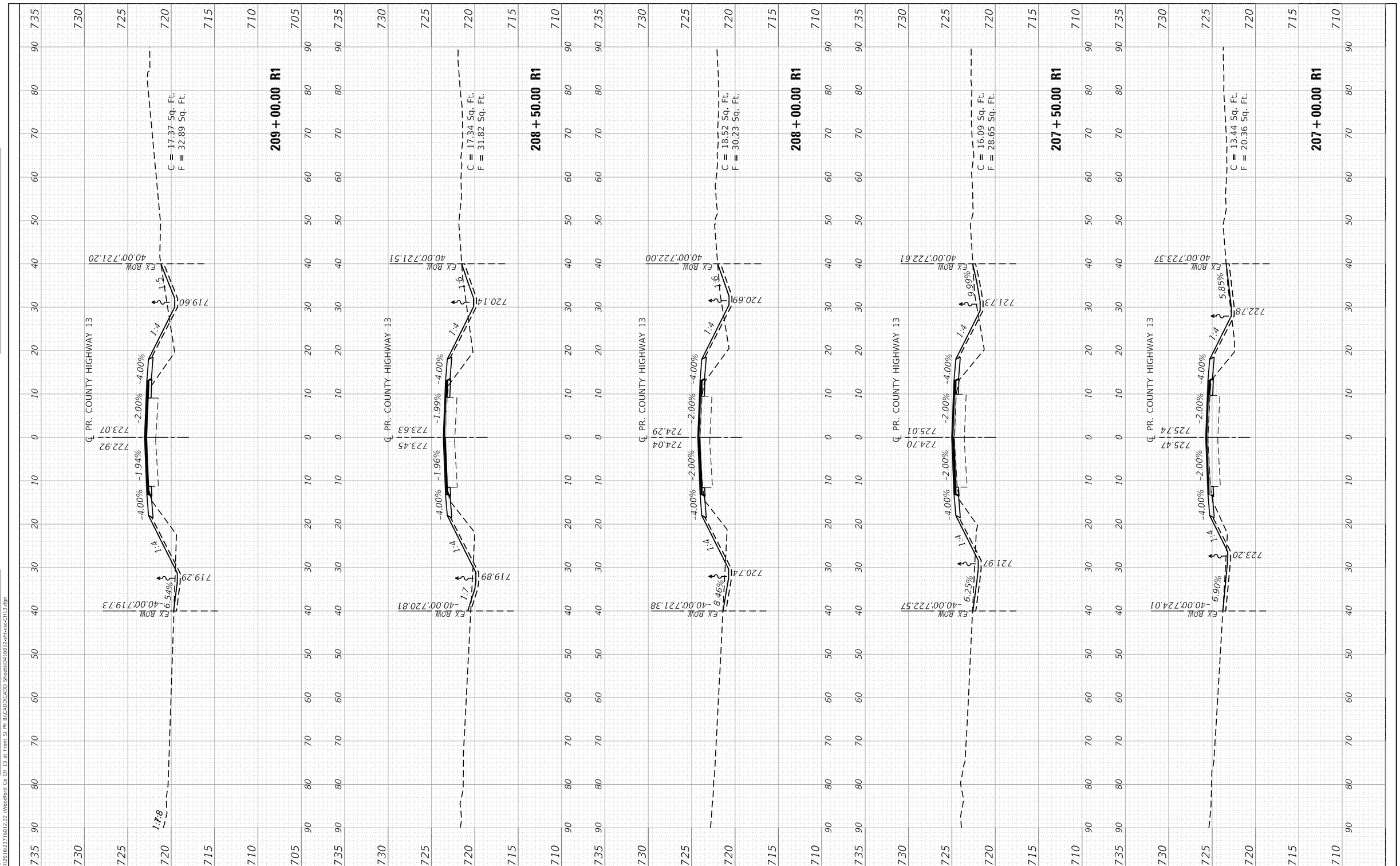

FINAL SURVEY	BY	DATE
SURVEYED		
PLOTTED		
TEMPLATE		
AREAS		
AREAS CHECKED		
NOTE BOOK		
NO.		

ORIGINAL SURVEY	BY	DATE
SURVEYED		
PLOTTED		
TEMPLATE		
AREAS		
AREAS CHECKED		
NOTE BOOK		
NO.		

MODEL: RCLPCH13A
FILE NAME: S:\2372\2016\2371602\22 (Woodford Co CH 13 at Front St Ph III\CADD\CADD Sheets\D416012-sht-xsc-CH13.dgn

MAURER-STUTZ
ENGINEERS SURVEYORS

USER NAME = jdspiller	DESIGNED - CLD	REVISED -
	DRAWN - CAD	REVISED -
PLOT SCALE = 20.0000 ' / in.	CHECKED - JDS	REVISED -
PLOT DATE = 11/12/2024	DATE - 10/18/2024	REVISED -

WOODFORD COUNTY
HIGHWAY DEPARTMENT

COUNTY HIGHWAY 13 RECONSTRUCTION AT FRONT ST.
CROSS SECTIONS – COUNTY HIGHWAY 13

SCALE: | SHEET 2 OF 14 SHEETS | STA.207+00.00 R1 TO STA. 209+00.00 R1

F.A.S. RTE.	SECTION	COUNTY	TOTAL SHEETS	SHEET NO.
364	20-00091-03-BR	WOODFORD	114	95
		CONTRACT NO. 89854		

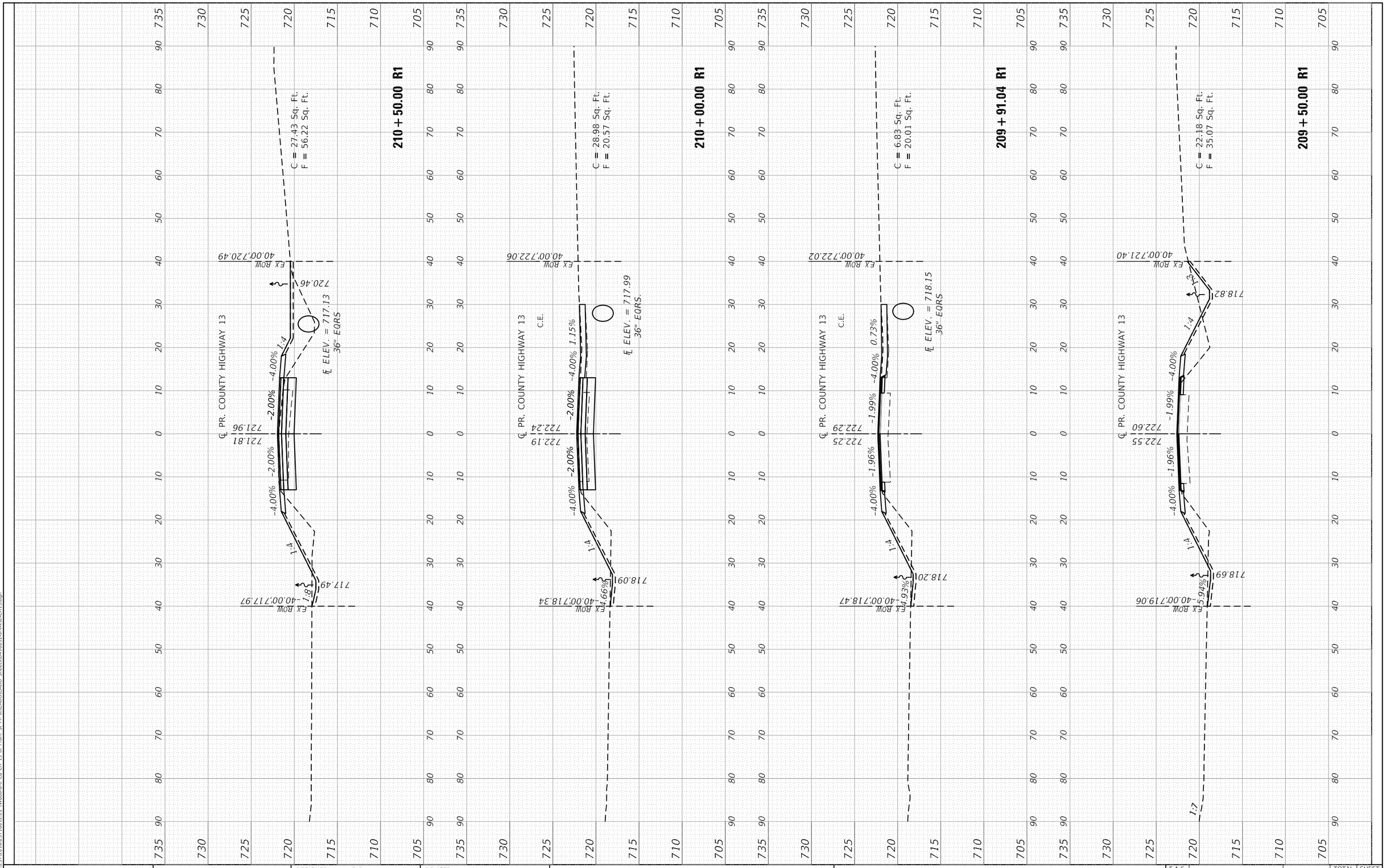

FINAL SURVEY		BY	DATE
NOTE BOOK	SURVEYED		
	PLOTTED		
	TEMPLATE		
	AREAS		
NO.	AREAS CHECKED		

ORIGINAL SURVEY		BY	DATE
NOTE BOOK	SURVEYED		
	PLOTTED		
	TEMPLATE		
	AREAS		
NO.	AREAS CHECKED		

MODEL: RCLPCH13A
FILE NAME: S:\2372\2016\2371601\22 (Woodford Co CH 13 at Front St Ph III\CADD\CADD Sheets\D416012-sht-xsc-CH13.dgn

MAURER-STUTZ
ENGINEERS SURVEYORS

USER NAME = jdspiller	DESIGNED - CLD	REVISED -
	DRAWN - CAD	REVISED -
PLOT SCALE = 20.0000 ' / in.	CHECKED - JDS	REVISED -
PLOT DATE = 11/12/2024	DATE - 10/18/2024	REVISED -

WOODFORD COUNTY
HIGHWAY DEPARTMENT

COUNTY HIGHWAY 13 RECONSTRUCTION AT FRONT ST.
CROSS SECTIONS – COUNTY HIGHWAY 13

SCALE: | SHEET 3 OF 14 SHEETS | STA.209+50.00 R1 TO STA. 210+50.00 R1

F.A.S. RTE.	SECTION	COUNTY	TOTAL SHEETS	SHEET NO.
364	20-00091-03-BR	WOODFORD	114	96
		CONTRACT NO. 89854		

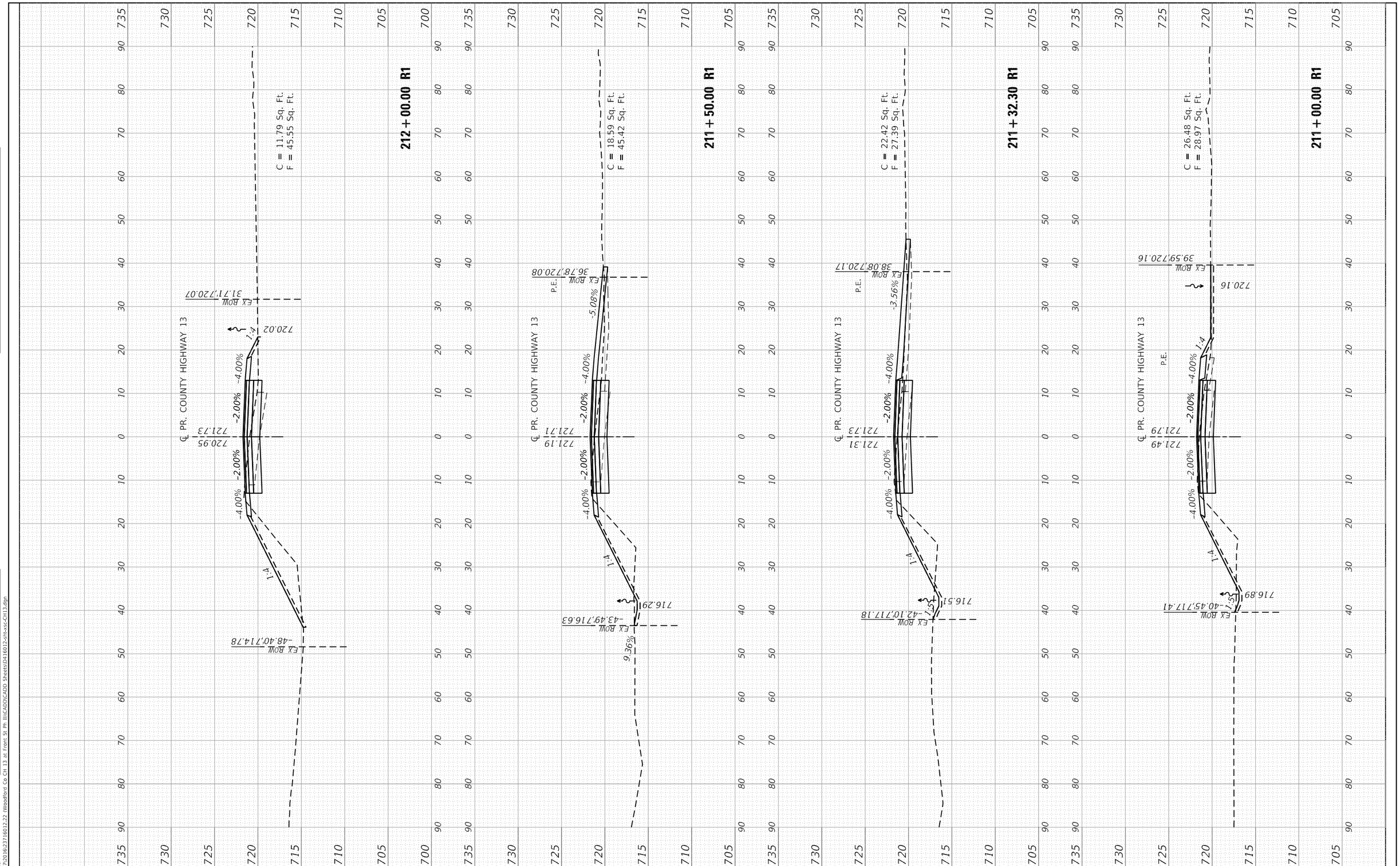

FINAL SURVEY	BY	DATE
SURVEYED		
PLOTTED		
TEMPLATE		
AREAS		
AREAS CHECKED		
NOTE BOOK		
NO.		

ORIGINAL SURVEY	BY	DATE
SURVEYED		
PLOTTED		
TEMPLATE		
AREAS		
AREAS CHECKED		
NOTE BOOK		
NO.		

MODEL: RCLPCH134
FILE NAME: S:\237\2016\2371601\22 (Woodford Co CH 13 at Front St Ph III)\CADD\CADD Sheets\D416012-sht-xsc-CH13.dgn

MAURER-STUTZ
ENGINEERS SURVEYORS

USER NAME = jdspiller	DESIGNED - CLD	REVISED -
	DRAWN - CAD	REVISED -
PLOT SCALE = 20.0000 ' / in.	CHECKED - JDS	REVISED -
PLOT DATE = 11/12/2024	DATE - 10/18/2024	REVISED -

WOODFORD COUNTY
HIGHWAY DEPARTMENT

COUNTY HIGHWAY 13 RECONSTRUCTION AT FRONT ST.
CROSS SECTIONS – COUNTY HIGHWAY 13

SCALE: | SHEET 4 OF 14 SHEETS | STA.211+00.00 R1 TO STA. 212+00.00 R1

F.A.S. RTE.	SECTION	COUNTY	TOTAL SHEETS	SHEET NO.
364	20-00091-03-BR	WOODFORD	114	97
		CONTRACT NO. 89854		

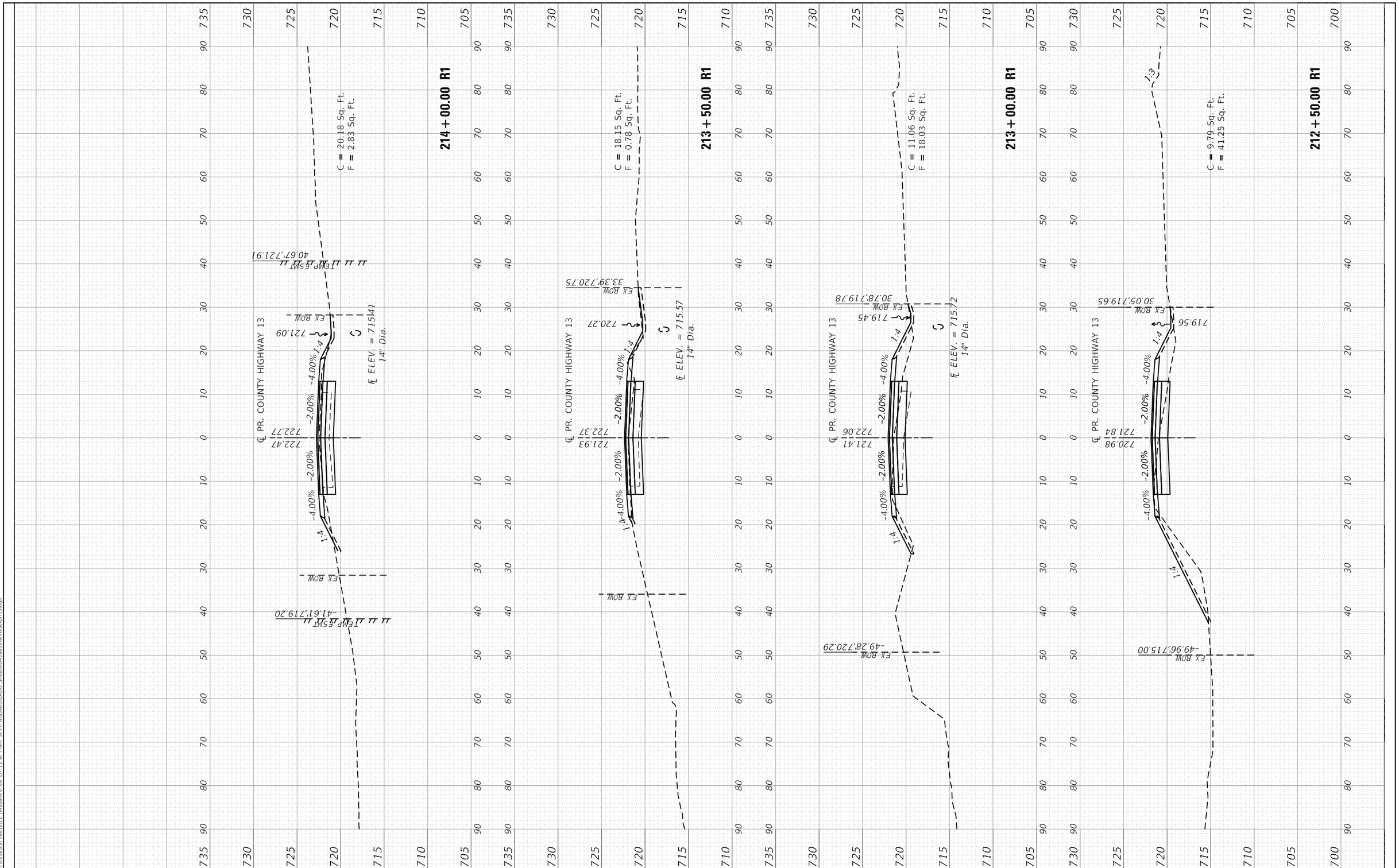

FINAL SURVEY		BY	DATE
NOTE BOOK	SURVEYED		
	PLOTTED		
	TEMPLATE		
NO.	AREAS		
	AREAS CHECKED		

ORIGINAL SURVEY		BY	DATE
NOTE BOOK	SURVEYED		
	PLOTTED		
	TEMPLATE		
NO.	AREAS		
	AREAS CHECKED		

MODEL: RCLPCH13A
FILE NAME: S:\2372\2016\2371601\22 (Woodford Co CH 13 at Front St Ph III\CADD\CADD Sheets\D416012-sht-xsc-CH13.dgn

MAURER-STUTZ
ENGINEERS SURVEYORS

USER NAME = jdspiller	DESIGNED - CLD	REVISED -
	DRAWN - CAD	REVISED -
PLOT SCALE = 20.0000 ' / in.	CHECKED - JDS	REVISED -
PLOT DATE = 11/12/2024	DATE - 10/18/2024	REVISED -

WOODFORD COUNTY
HIGHWAY DEPARTMENT

COUNTY HIGHWAY 13 RECONSTRUCTION AT FRONT ST.
CROSS SECTIONS – COUNTY HIGHWAY 13

SCALE: | SHEET 5 OF 14 SHEETS | STA.212+50.00 R1 TO STA. 214+00.00 R1

F.A.S. RTE.	SECTION	COUNTY	TOTAL SHEETS	SHEET NO.
364	20-00091-03-BR	WOODFORD	114	98
		CONTRACT NO. 89854		

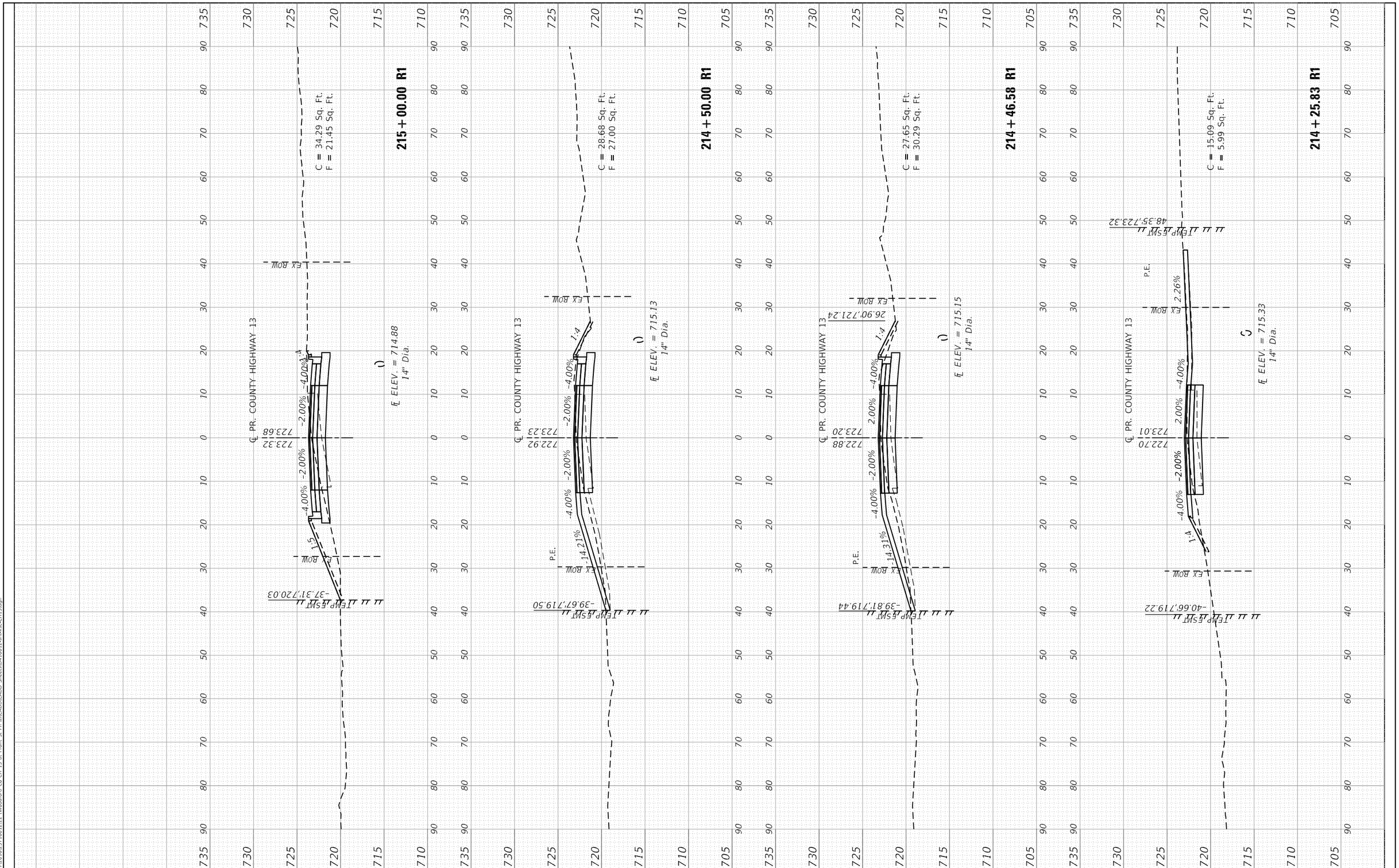

FINAL SURVEY	BY	DATE
NOTE BOOK	SURVEYED	
	PLOTTED	
	TEMPLATE	
	AREAS	
NO.	AREAS CHECKED	

ORIGINAL SURVEY	BY	DATE
NOTE BOOK	SURVEYED	
	PLOTTED	
	TEMPLATE	
	AREAS	
NO.	AREAS CHECKED	

MODEL: RCLPCH13A
FILE NAME: S:\237\2016\2371601\2.22 (Woodford Co CH 13 at Front St Ph III)\CADD\CADD Sheets\D416012-sht-xsc-CH13.dgn

MAURER-STUTZ
ENGINEERS SURVEYORS

USER NAME = jdspiller	DESIGNED - CLD	REVISED -
	DRAWN - CAD	REVISED -
PLOT SCALE = 20.0000 ' / in.	CHECKED - JDS	REVISED -
PLOT DATE = 11/12/2024	DATE - 10/18/2024	REVISED -

WOODFORD COUNTY
HIGHWAY DEPARTMENT

COUNTY HIGHWAY 13 RECONSTRUCTION AT FRONT ST.
CROSS SECTIONS – COUNTY HIGHWAY 13

SCALE: | SHEET 6 OF 14 SHEETS | STA.214+25.83 R1 TO STA. 215+00.00 R1

F.A.S. RTE.	SECTION	COUNTY	TOTAL SHEETS	SHEET NO.
364	20-00091-03-BR	WOODFORD	114	99
		CONTRACT NO. 89854		

FINAL SURVEY		BY	DATE
NOTE BOOK	SURVEYED		
	PLOTTED		
	TEMPLATE		
	AREAS		
NO.	AREAS CHECKED		

ORIGINAL SURVEY		BY	DATE
NOTE BOOK	SURVEYED		
	PLOTTED		
	TEMPLATE		
	AREAS		
NO.	AREAS CHECKED		

INTERSECTION OMISSION

STA. 216+17.71 - STA. 216+97.34

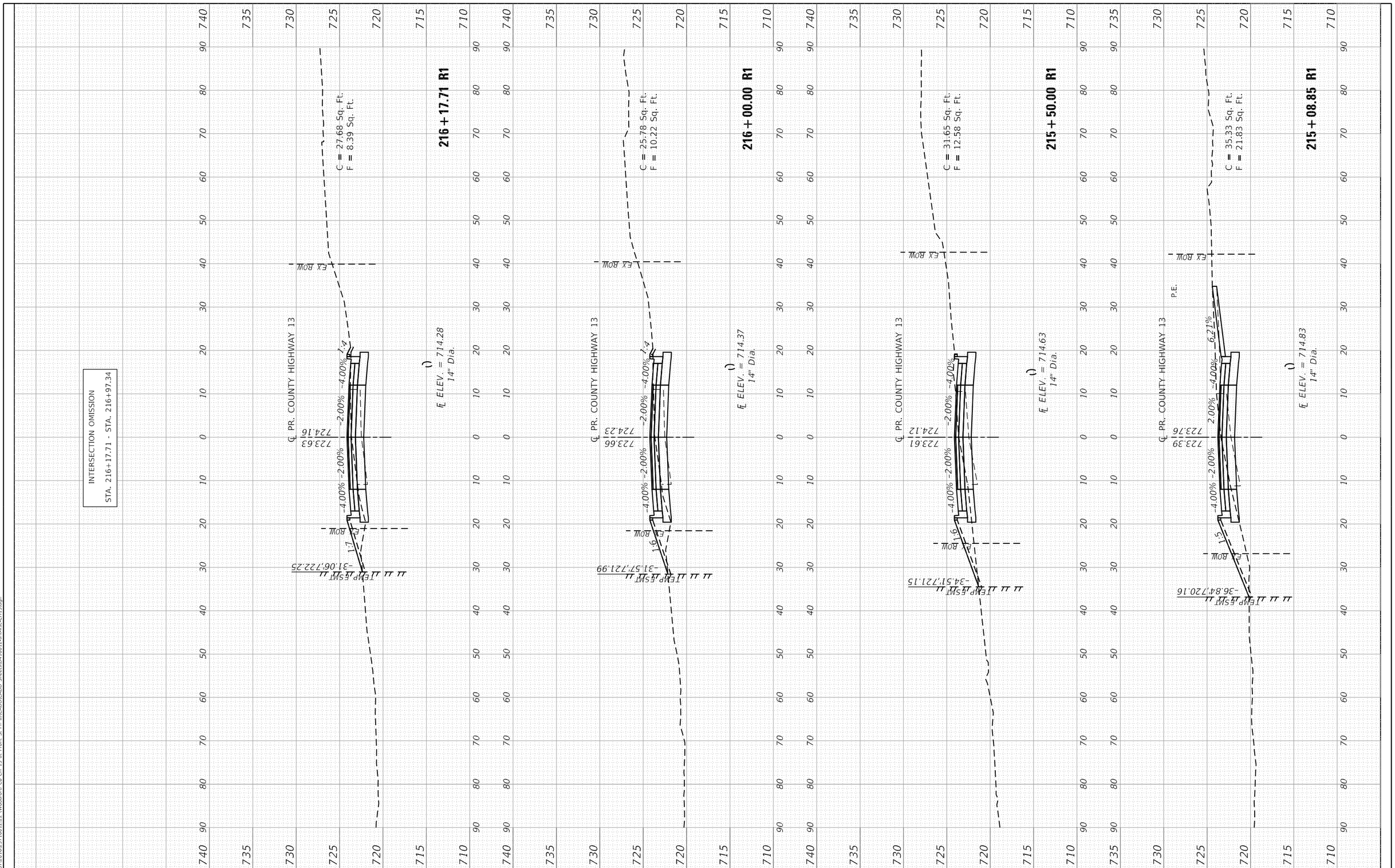

MODEL: RCLPCH13A
FILE NAME: S:\2372\2016\2371602\22 (Woodford Co CH 13 at Front St Ph III\CADD\CADD Sheets\D416012-sht-xsc-CH13.dgn

MAURER-STUTZ
ENGINEERS SURVEYORS

USER NAME = jdspiller	DESIGNED - CLD	REVISED -
	DRAWN - CAD	REVISED -
PLOT SCALE = 20.0000 ' / in.	CHECKED - JDS	REVISED -
PLOT DATE = 11/12/2024	DATE - 10/18/2024	REVISED -

WOODFORD COUNTY
HIGHWAY DEPARTMENT

COUNTY HIGHWAY 13 RECONSTRUCTION AT FRONT ST.
CROSS SECTIONS – COUNTY HIGHWAY 13

SCALE: | SHEET 7 OF 14 SHEETS | STA.215+08.85 R1 TO STA. 216+17.71 R1

F.A.S. RTE.	SECTION	COUNTY	TOTAL SHEETS	SHEET NO.
364	20-00091-03-BR	WOODFORD	114	100
		CONTRACT NO. 89854		

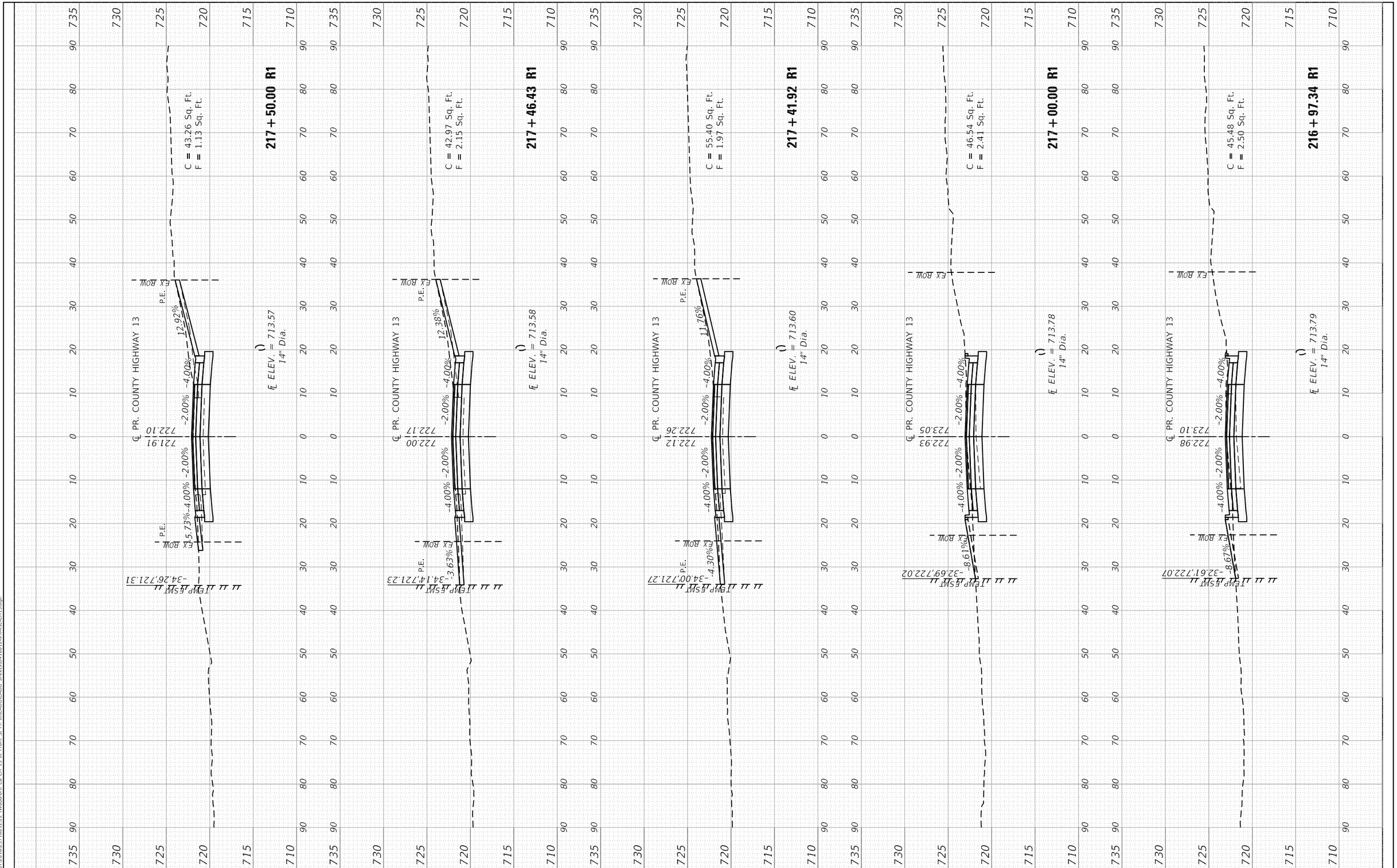

FINAL SURVEY	BY	DATE
SURVEYED		
PLOTTED		
TEMPLATE		
AREAS		
AREAS CHECKED		
NOTE BOOK		
NO.		

ORIGINAL SURVEY	BY	DATE
SURVEYED		
PLOTTED		
TEMPLATE		
AREAS		
AREAS CHECKED		
NOTE BOOK		
NO.		

MODEL: RCLPCH13A
FILE NAME: S:\2372\2016\2371601\2.22 (Woodford Co CH 13 at Front St Ph III\CADD\CADD Sheets\D416012-sht-xsc-CH13.dgn

MAURER-STUTZ
ENGINEERS SURVEYORS

USER NAME = jdspiller	DESIGNED - CLD	REVISED -
	DRAWN - CAD	REVISED -
PLOT SCALE = 20.0000 ' / in.	CHECKED - JDS	REVISED -
PLOT DATE = 11/12/2024	DATE - 10/18/2024	REVISED -

WOODFORD COUNTY
HIGHWAY DEPARTMENT

COUNTY HIGHWAY 13 RECONSTRUCTION AT FRONT ST.
CROSS SECTIONS – COUNTY HIGHWAY 13

SCALE: | SHEET 8 OF 14 SHEETS | STA.216+97.34 R1 TO STA. 217+50.00 R1

F.A.S. RTE.	SECTION	COUNTY	TOTAL SHEETS	SHEET NO.
364	20-00091-03-BR	WOODFORD	114	101
		CONTRACT NO. 89854		

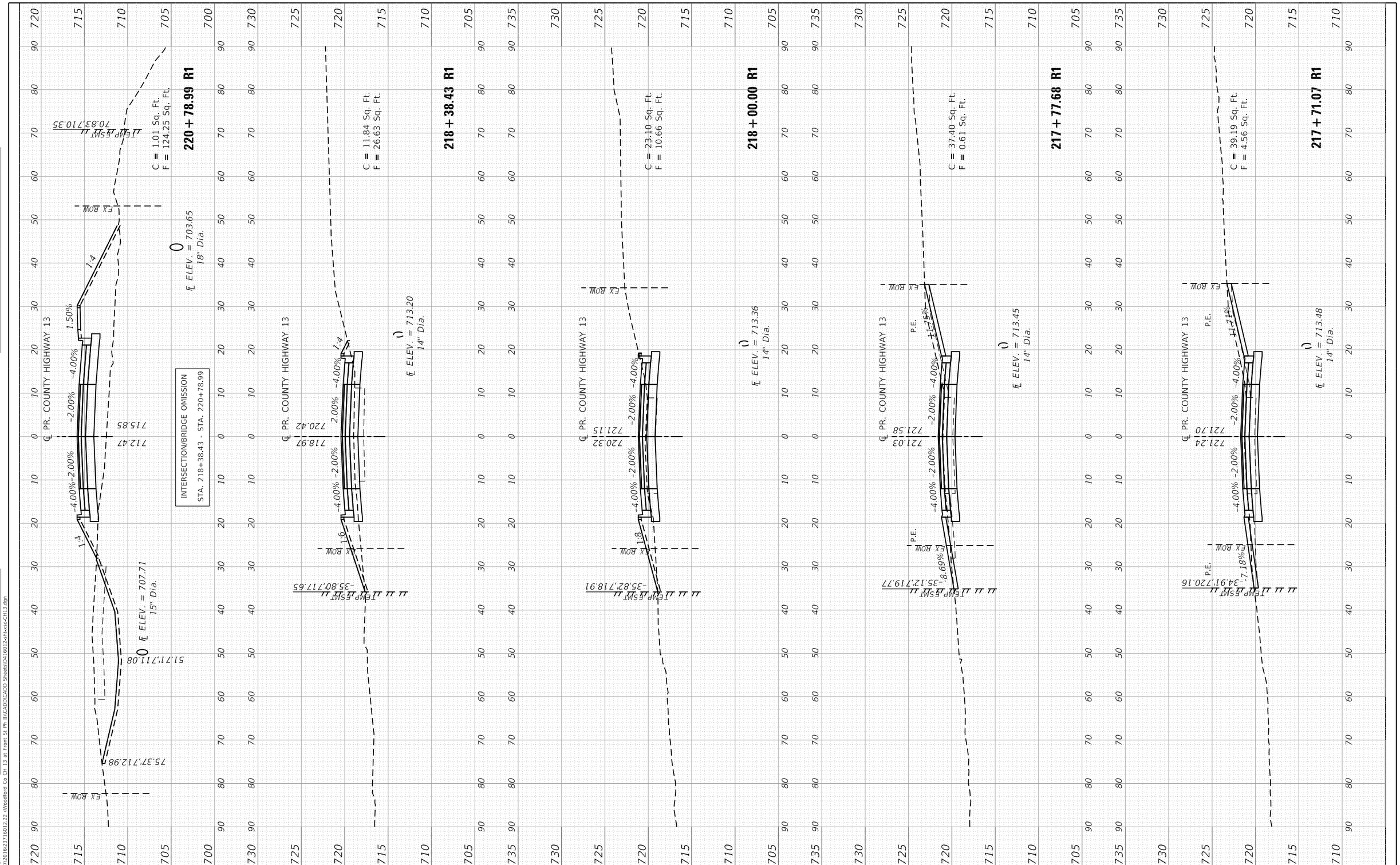

FINAL SURVEY		BY	DATE
NOTE BOOK	SURVEYED		
	PLOTTED		
	TEMPLATE		
	AREAS		
NO.	AREAS CHECKED		

ORIGINAL SURVEY		BY	DATE
NOTE BOOK	SURVEYED		
	PLOTTED		
	TEMPLATE		
	AREAS		
NO.	AREAS CHECKED		

MODEL: RCLPCH13A
FILE NAME: S:\2372\2016\2371601\2.22 (Woodford Co CH 13 at Front St Ph III\CADD\CADD Sheets\D416012-sht-xsc-CH13.dgn

MAURER-STUTZ
ENGINEERS SURVEYORS

USER NAME = jdspiller	DESIGNED - CLD	REVISED -
	DRAWN - CAD	REVISED -
PLOT SCALE = 20.0000 ' / in.	CHECKED - JDS	REVISED -
PLOT DATE = 11/12/2024	DATE - 10/18/2024	REVISED -

WOODFORD COUNTY
HIGHWAY DEPARTMENT

COUNTY HIGHWAY 13 RECONSTRUCTION AT FRONT ST.
CROSS SECTIONS – COUNTY HIGHWAY 13

SCALE: | SHEET 9 OF 14 SHEETS | STA.217+71.07 R1 TO STA. 220+78.99 R1

F.A.S. RTE.	SECTION	COUNTY	TOTAL SHEETS	SHEET NO.
364	20-00091-03-BR	WOODFORD	114	102
		CONTRACT NO. 89854		

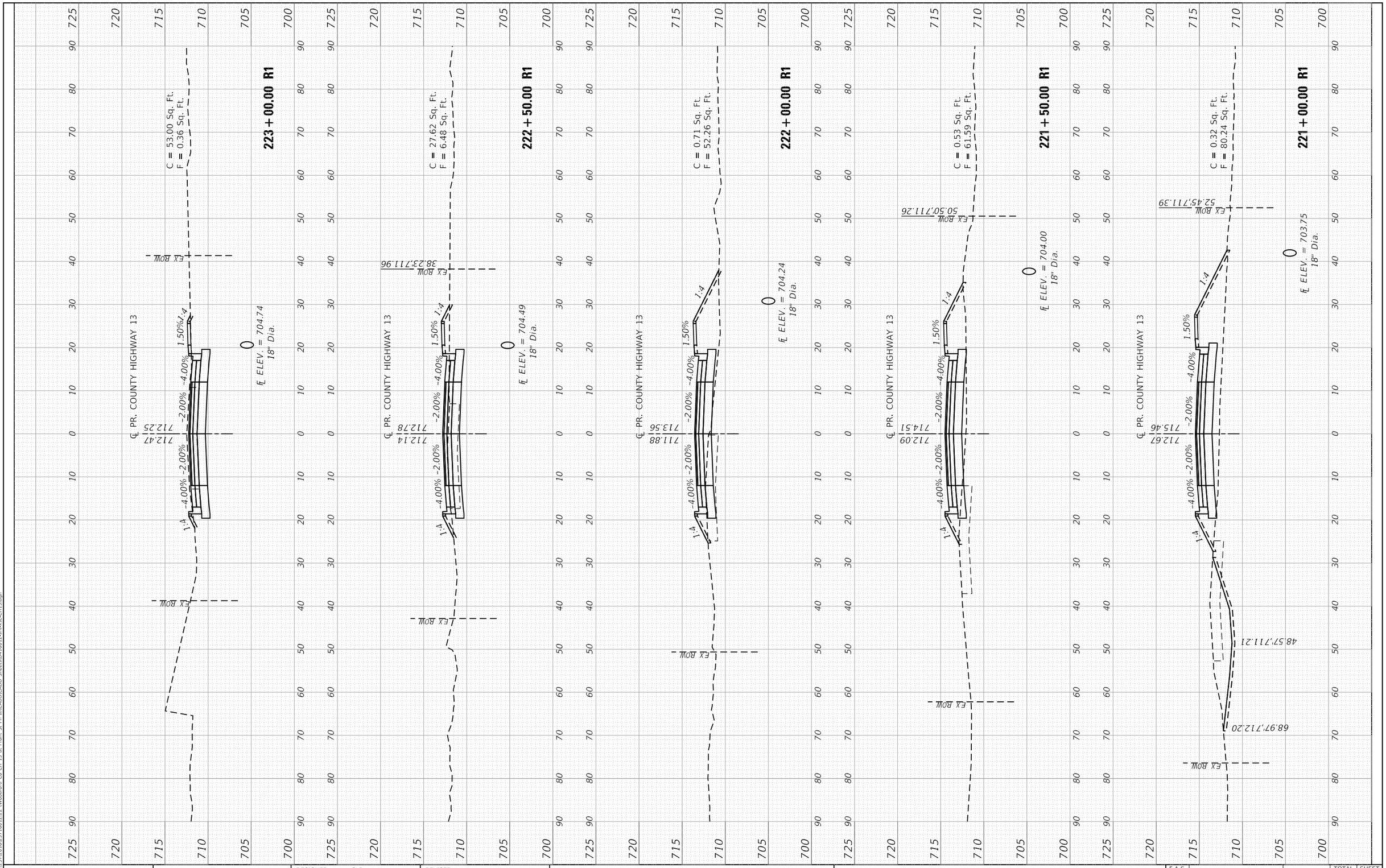

FINAL SURVEY		BY	DATE
NOTE BOOK	SURVEYED		
	PLOTTED		
	TEMPLATE		
	AREAS		
NO.	AREAS CHECKED		

ORIGINAL SURVEY		BY	DATE
NOTE BOOK	SURVEYED		
	PLOTTED		
	TEMPLATE		
	AREAS		
NO.	AREAS CHECKED		

MODEL: RCLPCH13A
FILE NAME: S:\2372\2016\2371602\22 (Woodford Co CH 13 at Front St Ph III\CADD\CADD Sheets\D416012-sht-xsc-CH13.dgn

MAURER-STUTZ
ENGINEERS SURVEYORS

USER NAME = jdspiller	DESIGNED - CLD	REVISED -
	DRAWN - CAD	REVISED -
PLOT SCALE = 20.0000 ' / in.	CHECKED - JDS	REVISED -
PLOT DATE = 11/12/2024	DATE - 10/18/2024	REVISED -

WOODFORD COUNTY
HIGHWAY DEPARTMENT

COUNTY HIGHWAY 13 RECONSTRUCTION AT FRONT ST.
CROSS SECTIONS – COUNTY HIGHWAY 13

SCALE: | SHEET 10 OF 14 SHEETS | STA.221+00.00 R1 TO STA. 223+00.00 R1

F.A.S. RTE.	SECTION	COUNTY	TOTAL SHEETS	SHEET NO.
364	20-00091-03-BR	WOODFORD	114	103
		CONTRACT NO. 89854		

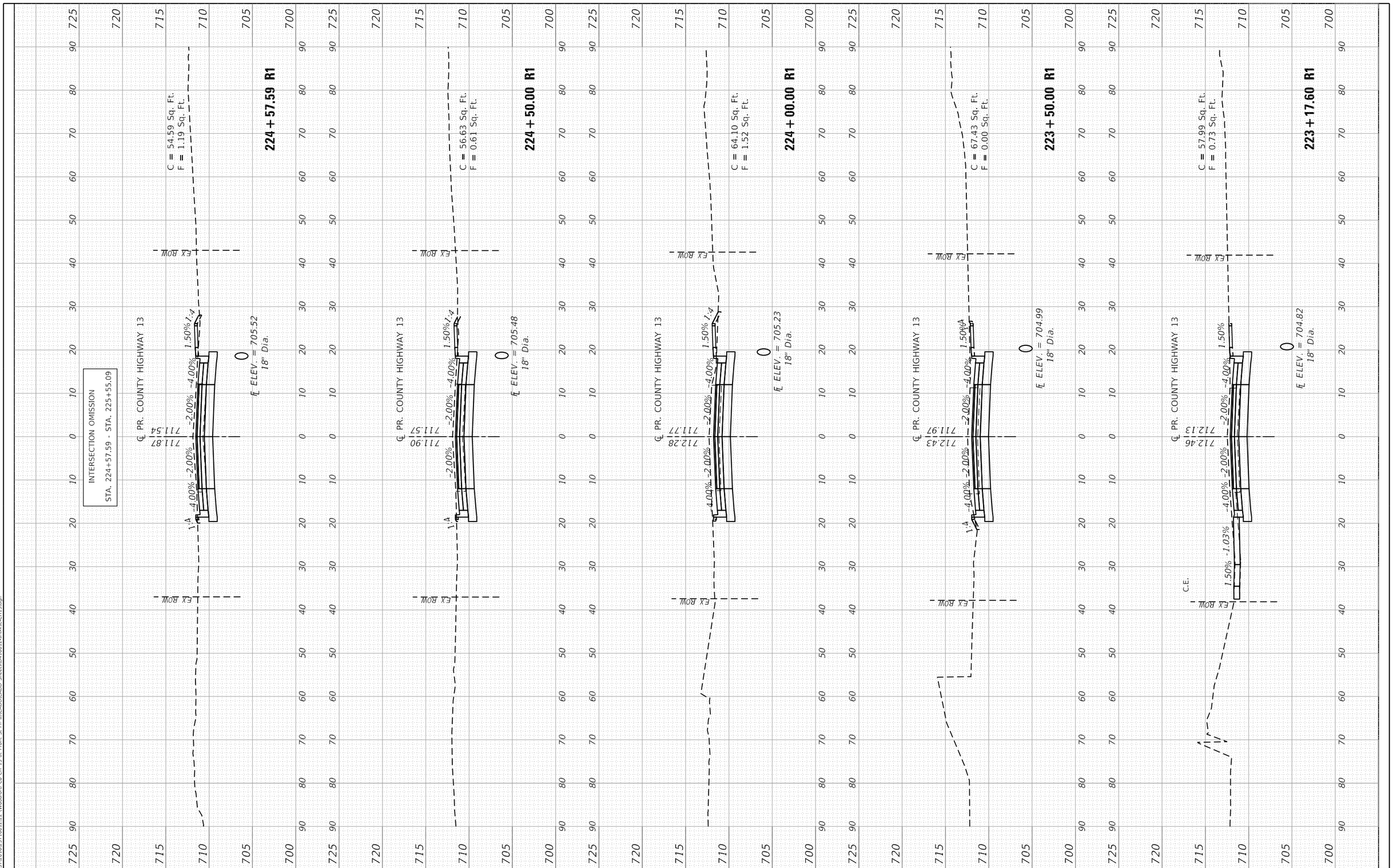

FINAL SURVEY		BY	DATE
NOTE BOOK	SURVEYED		
	PLOTTED		
	TEMPLATE		
	AREAS		
NO.	AREAS CHECKED		

ORIGINAL SURVEY		BY	DATE
NOTE BOOK	SURVEYED		
	PLOTTED		
	TEMPLATE		
	AREAS		
NO.	AREAS CHECKED		

MODEL: RCLPCH13A
FILE NAME: S:\2372\2016\2371602\22 (Woodford Co CH 13 at Front St Ph III\CADD\CADD Sheets\D416012-sht-xsc-CH13.dgn

MAURER-STUTZ
ENGINEERS SURVEYORS

USER NAME = jdspiller	DESIGNED - CLD	REVISED -
	DRAWN - CAD	REVISED -
PLOT SCALE = 20.0000 ' / in.	CHECKED - JDS	REVISED -
PLOT DATE = 11/12/2024	DATE - 10/18/2024	REVISED -

WOODFORD COUNTY
HIGHWAY DEPARTMENT

COUNTY HIGHWAY 13 RECONSTRUCTION AT FRONT ST.
CROSS SECTIONS – COUNTY HIGHWAY 13

SCALE: | SHEET 11 OF 14 SHEETS | STA.223+17.60 R1 TO STA. 224+57.59 R1

F.A.S. RTE.	SECTION	COUNTY	TOTAL SHEETS	SHEET NO.
364	20-00091-03-BR	WOODFORD	114	104
		CONTRACT NO. 89854		

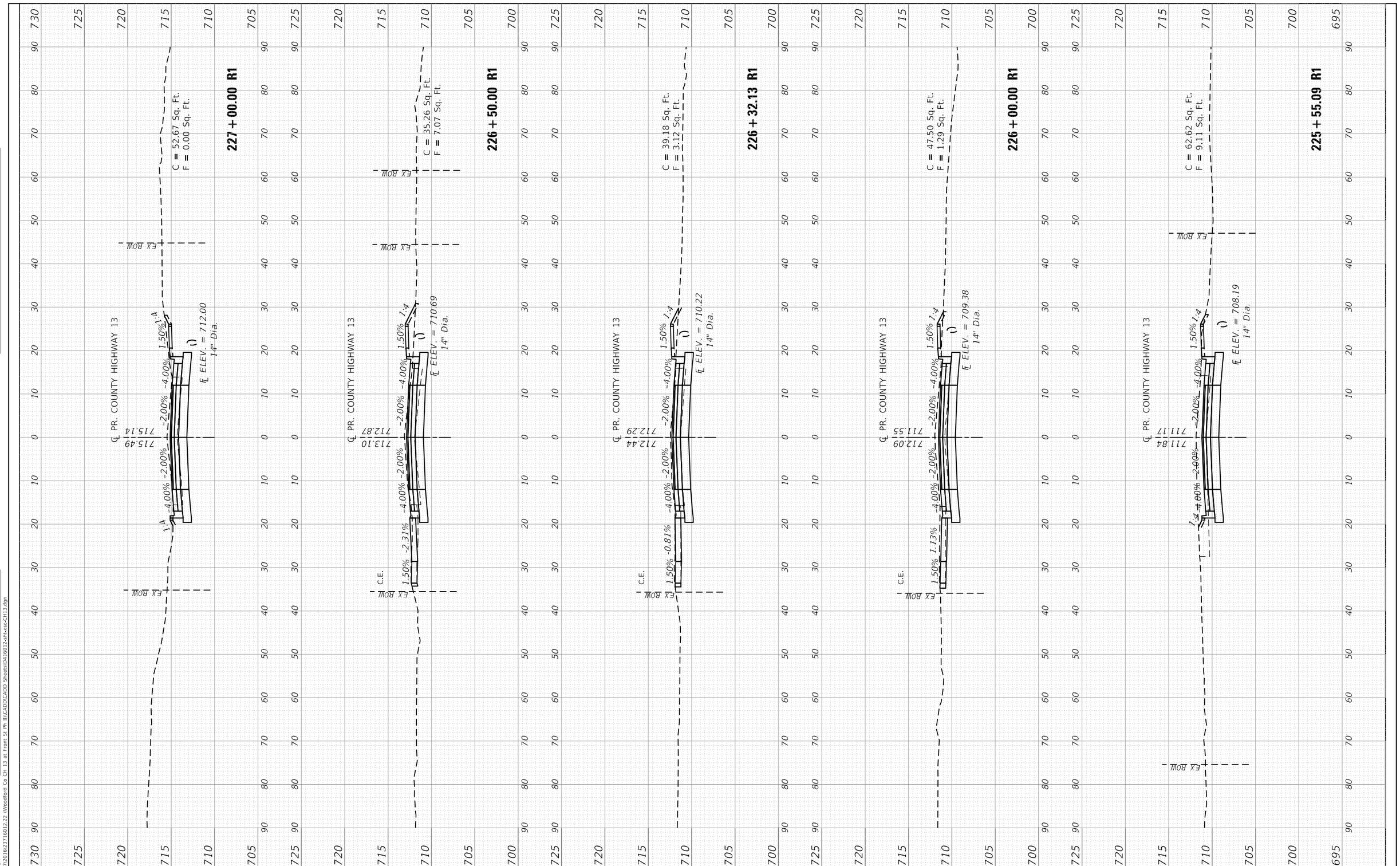

FINAL SURVEY	BY	DATE
SURVEYED		
PLOTTED		
TEMPLATE		
AREAS		
AREAS CHECKED		
NOTE BOOK		
NO.		

ORIGINAL SURVEY	BY	DATE
SURVEYED		
PLOTTED		
TEMPLATE		
AREAS		
AREAS CHECKED		
NOTE BOOK		
NO.		

MODEL: RCLPCH13A
FILE NAME: S:\2372\2016\2371601\2.22 (Woodford Co CH 13 at Front St Ph III\CADD\CADD Sheets\D416012-sht-xsc-CH13.dgn

MAURER-STUTZ
ENGINEERS SURVEYORS

USER NAME = jdspiller	DESIGNED - CLD	REVISED -
	DRAWN - CAD	REVISED -
PLOT SCALE = 20.0000 ' / in.	CHECKED - JDS	REVISED -
PLOT DATE = 11/12/2024	DATE - 10/18/2024	REVISED -

WOODFORD COUNTY
HIGHWAY DEPARTMENT

COUNTY HIGHWAY 13 RECONSTRUCTION AT FRONT ST.
CROSS SECTIONS – COUNTY HIGHWAY 13

SCALE: | SHEET 12 OF 14 SHEETS | STA.225+55.09 R1 TO STA. 227+00.00 R1

F.A.S. RTE.	SECTION	COUNTY	TOTAL SHEETS	SHEET NO.
364	20-00091-03-BR	WOODFORD	114	105
		CONTRACT NO. 89854		

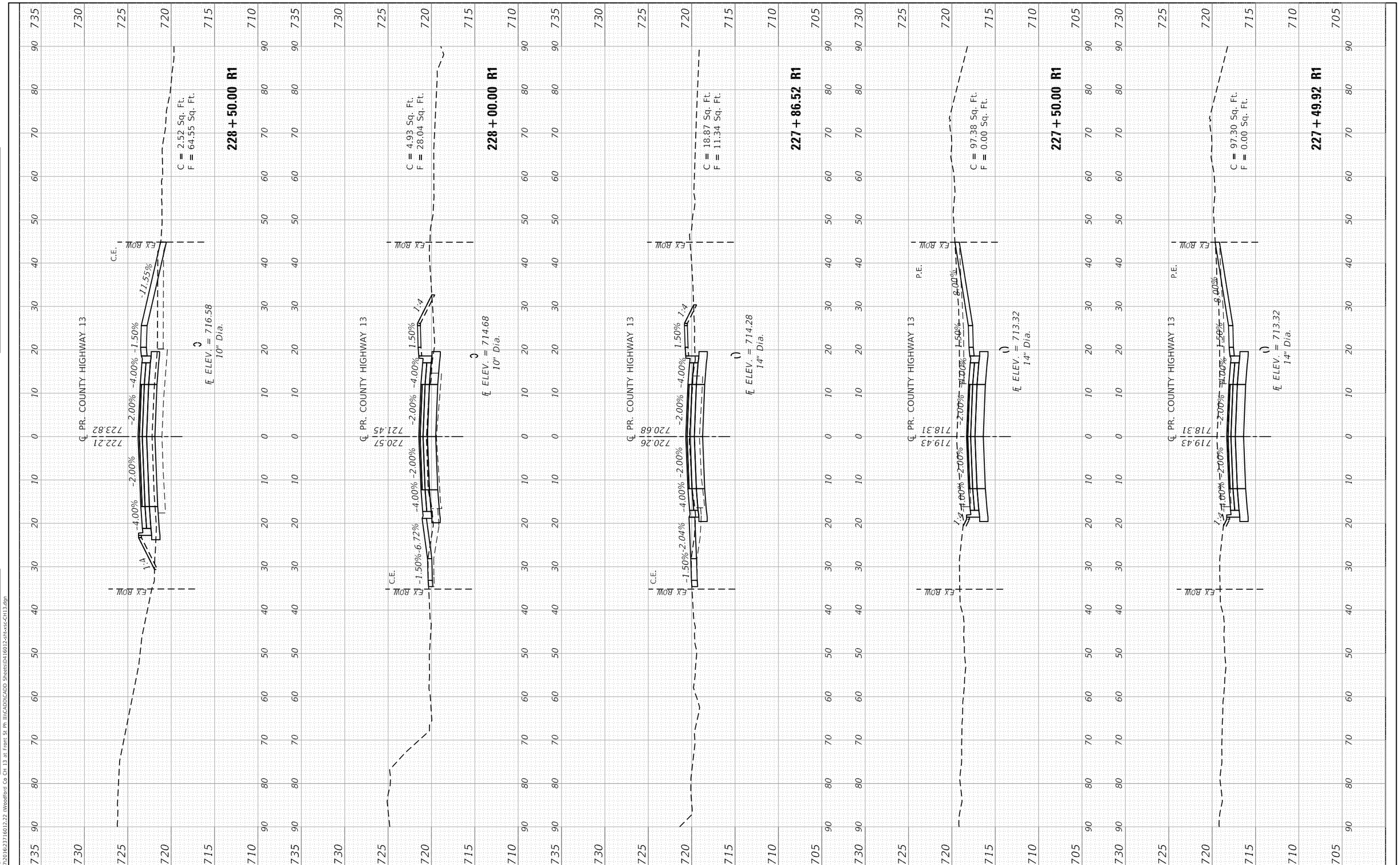

FINAL SURVEY		BY	DATE
NOTE BOOK	SURVEYED		
	PLOTTED		
	TEMPLATE		
	AREAS		
NO.	AREAS CHECKED		

ORIGINAL SURVEY		BY	DATE
NOTE BOOK	SURVEYED		
	PLOTTED		
	TEMPLATE		
	AREAS		
NO.	AREAS CHECKED		

MODEL: RCLPCH13A
FILE NAME: S:\2372\2016\2371602\22 (Woodford Co CH 13 at Front St Ph III\CADD\CADD Sheets\D416012-sht-xsc-CH13.dgn

MAURER-STUTZ
ENGINEERS SURVEYORS

USER NAME = jdspiller	DESIGNED - CLD	REVISED -
	DRAWN - CAD	REVISED -
PLOT SCALE = 20.0000 ' / in.	CHECKED - JDS	REVISED -
PLOT DATE = 11/12/2024	DATE - 10/18/2024	REVISED -

WOODFORD COUNTY
HIGHWAY DEPARTMENT

COUNTY HIGHWAY 13 RECONSTRUCTION AT FRONT ST.
CROSS SECTIONS – COUNTY HIGHWAY 13

SCALE: | SHEET 13 OF 14 SHEETS | STA.227+49.92 R1 TO STA. 228+50.00 R1

F.A.S. RTE.	SECTION	COUNTY	TOTAL SHEETS	SHEET NO.
364	20-00091-03-BR	WOODFORD	114	106
		CONTRACT NO. 89854		

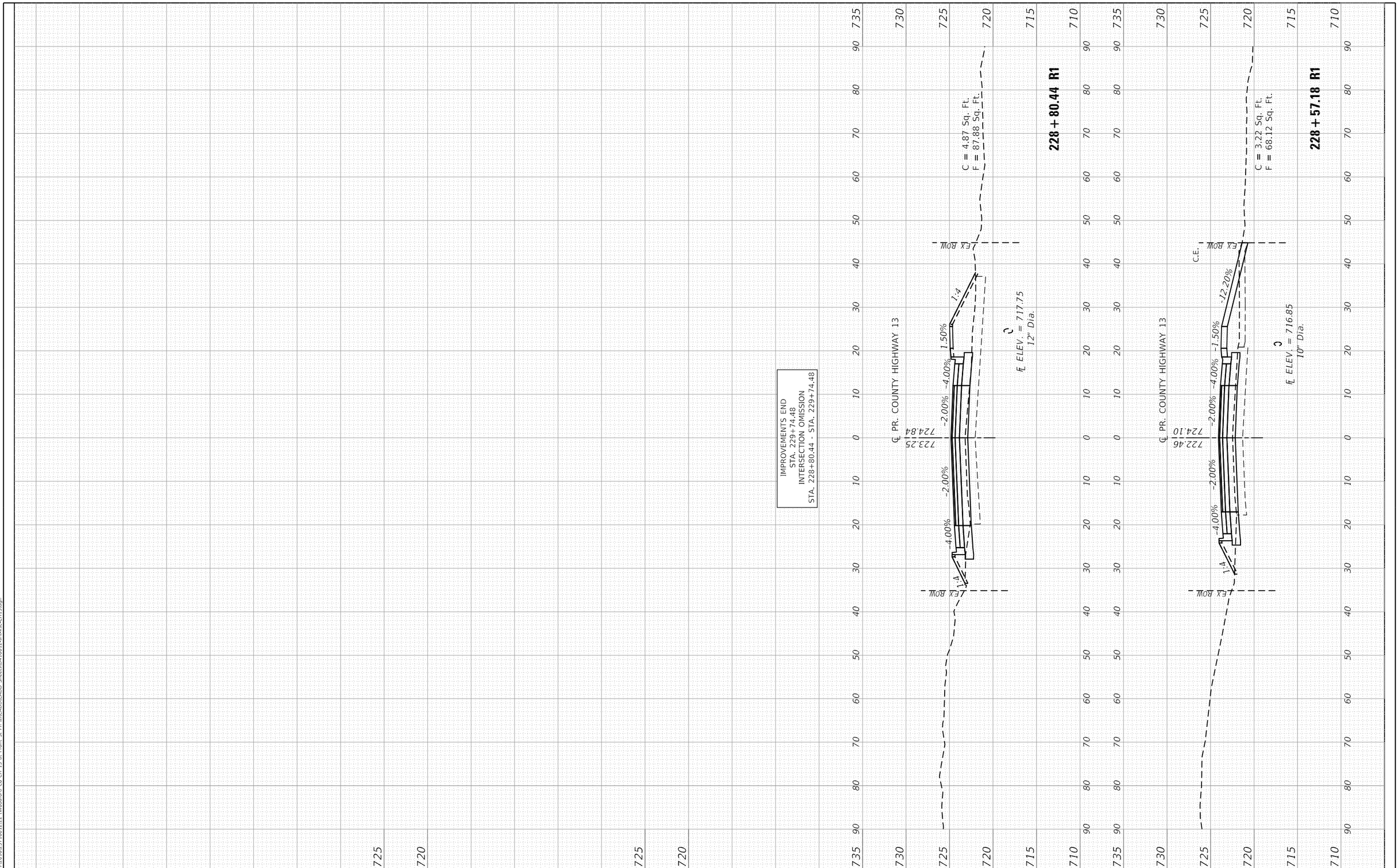

FINAL SURVEY		BY	DATE
NOTE BOOK	SURVEYED		
	PLOTTED		
	TEMPLATE		
	AREAS		
NO.	AREAS CHECKED		

ORIGINAL SURVEY		BY	DATE
NOTE BOOK	SURVEYED		
	PLOTTED		
	TEMPLATE		
	AREAS		
NO.	AREAS CHECKED		

MODEL: RCLPCH13A
FILE NAME: S:\2372\2016\2371612-22 (Woodford Co CH 13 at Front St Ph III)\CADD\CADD Sheets\D416012-sht-xsc-CH13.dgn

MAURER-STUTZ
ENGINEERS SURVEYORS

USER NAME = jdspiller	DESIGNED - CLD	REVISED -
	DRAWN - CAD	REVISED -
PLOT SCALE = 20.0000 ' / in.	CHECKED - JDS	REVISED -
PLOT DATE = 11/12/2024	DATE - 10/18/2024	REVISED -

WOODFORD COUNTY
HIGHWAY DEPARTMENT

COUNTY HIGHWAY 13 RECONSTRUCTION AT FRONT ST.
CROSS SECTIONS – COUNTY HIGHWAY 13

SCALE: | SHEET 14 OF 14 SHEETS | STA.228+57.18 R1 TO STA. 228+80.44 R1

F.A.S. RTE.	SECTION	COUNTY	TOTAL SHEETS	SHEET NO.
364	20-00091-03-BR	WOODFORD	114	107
		CONTRACT NO. 89854		

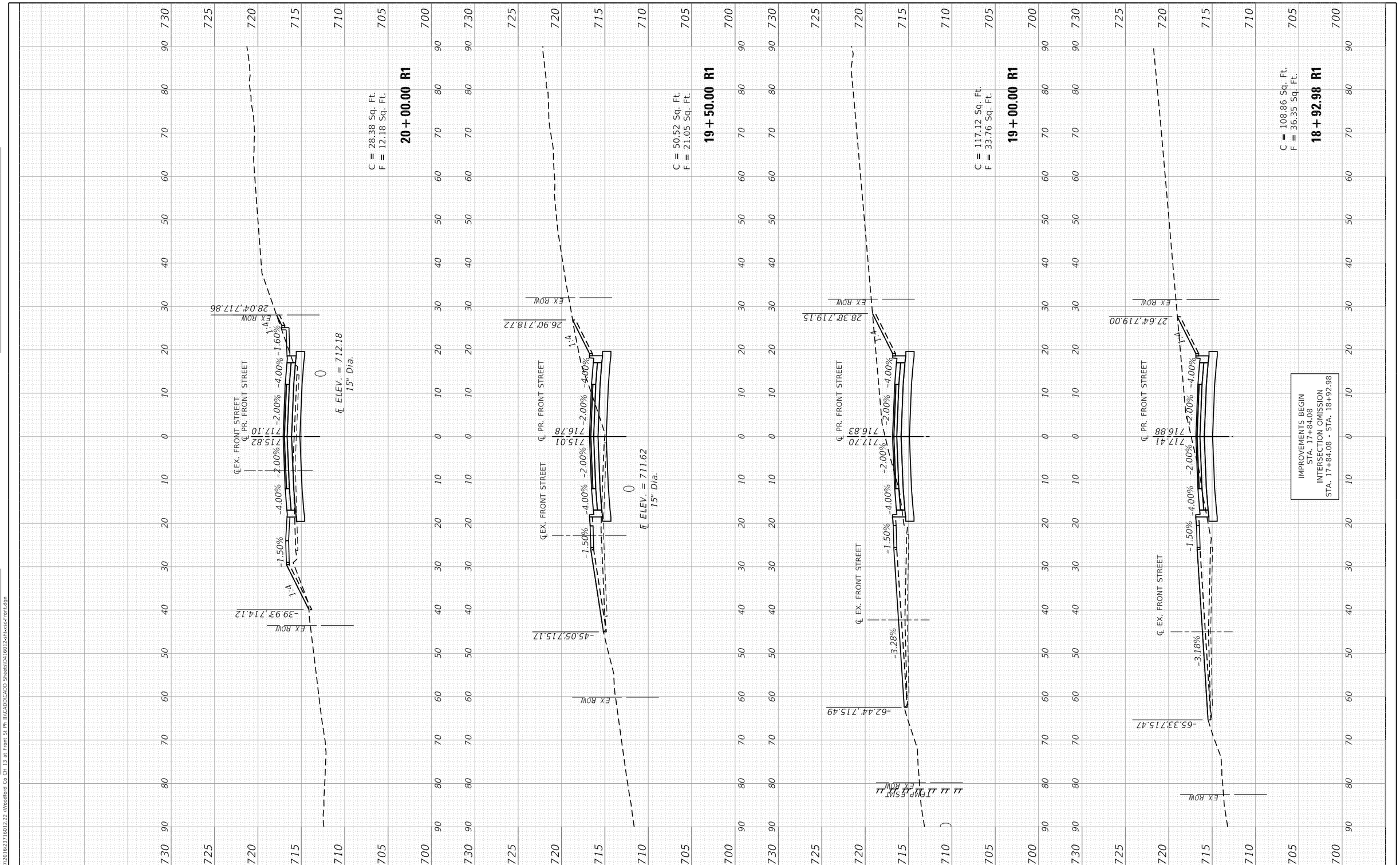

FINAL SURVEY		BY	DATE
NOTE BOOK	SURVEYED		
	PLOTTED		
	TEMPLATE		
	AREAS		
NO.	AREAS CHECKED		

ORIGINAL SURVEY		BY	DATE
NOTE BOOK	SURVEYED		
	PLOTTED		
	TEMPLATE		
	AREAS		
NO.	AREAS CHECKED		

MODEL: RCLPFRNTA
FILE NAME: S:\237\2016\2371601\22 (Woodford Co CH 13 at Front St Ph III\CADD\CADD Sheets\D416012-sht-xsc-Front.dgn

MAURER-STUTZ
ENGINEERS SURVEYORS

USER NAME = jdspiller	DESIGNED - CLD	REVISED -
	DRAWN - CAD	REVISED -
PLOT SCALE = 20.0000 ' / in.	CHECKED - JDS	REVISED -
PLOT DATE = 11/12/2024	DATE - 10/18/2024	REVISED -

WOODFORD COUNTY
HIGHWAY DEPARTMENT

COUNTY HIGHWAY 13 RECONSTRUCTION AT FRONT ST.
CROSS SECTIONS – FRONT STREET

SCALE: | SHEET 1 OF 2 SHEETS | STA.18+92.98 R1 TO STA. 20+00.00 R1

F.A.S. RTE.	SECTION	COUNTY	TOTAL SHEETS	SHEET NO.
364	20-00091-03-BR	WOODFORD	114	108

CONTRACT NO. 89854

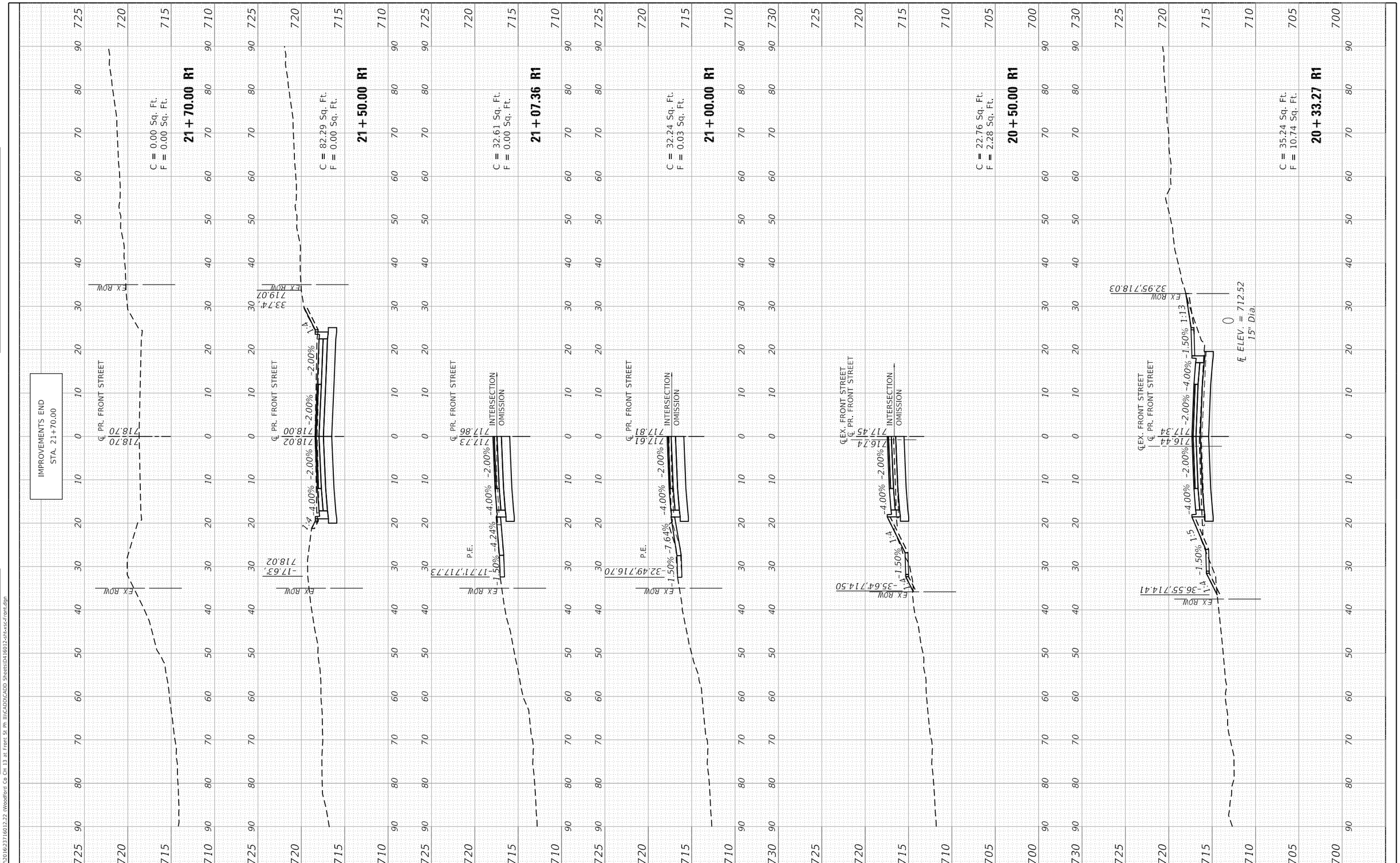

FINAL SURVEY		BY	DATE
NOTE BOOK	SURVEYED		
	PLOTTED		
	TEMPLATE		
	AREAS		
NO.	AREAS CHECKED		

ORIGINAL SURVEY		BY	DATE
NOTE BOOK	SURVEYED		
	PLOTTED		
	TEMPLATE		
	AREAS		
NO.	AREAS CHECKED		

MODEL: RCLPFRNTA
FILE NAME: S:\23\2016\23716012.22 (Woodford Co CH 13 at Front St Ph III)\CADD\CADD Sheets\D416012-sht-xsc-Front.dgn

MAURER-STUTZ
ENGINEERS SURVEYORS

USER NAME = jdspiller	DESIGNED - CLD	REVISED -
	DRAWN - CAD	REVISED -
PLOT SCALE = 20.0000 ' / in.	CHECKED - JDS	REVISED -
PLOT DATE = 11/12/2024	DATE - 10/18/2024	REVISED -

WOODFORD COUNTY
HIGHWAY DEPARTMENT

COUNTY HIGHWAY 13 RECONSTRUCTION AT FRONT ST.
CROSS SECTIONS – FRONT STREET

SCALE: | SHEET 2 OF 2 SHEETS | STA.20+33.27 R1 TO STA. 21+70.00 R1

F.A.S. RTE.	SECTION	COUNTY	TOTAL SHEETS	SHEET NO.
364	20-00091-03-BR	WOODFORD	114	109
		CONTRACT NO. 89854		

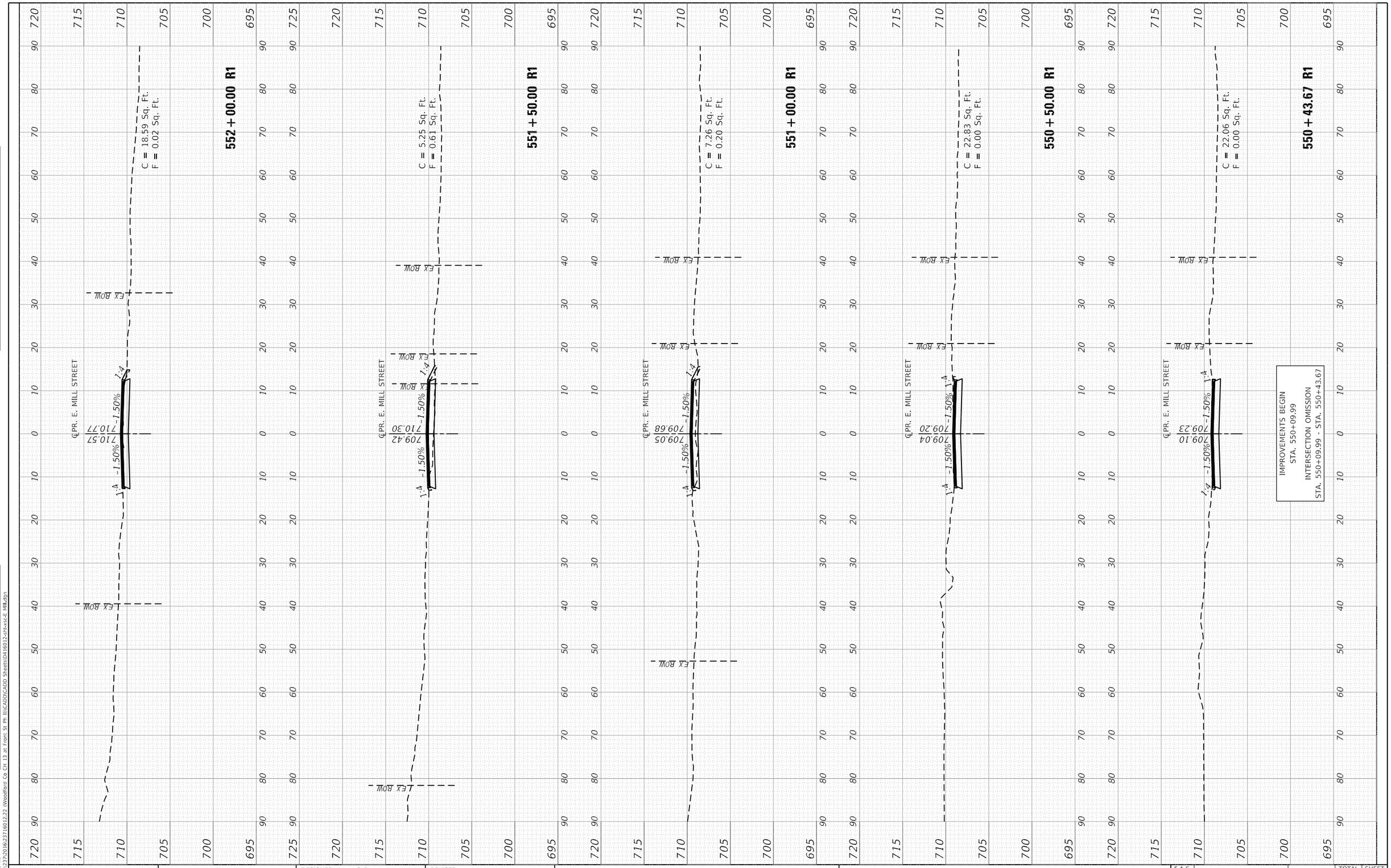

FINAL SURVEY		BY	DATE
NOTE BOOK NO.	SURVEYED		
	PLOTTED		
	TEMPLATE		
	AREAS		
	AREAS CHECKED		

ORIGINAL SURVEY		BY	DATE
NOTE BOOK NO.	SURVEYED		
	PLOTTED		
	TEMPLATE		
	AREAS		
	AREAS CHECKED		

MODEL: RCLPEMILA
FILE NAME: S:\237\2016\2371601 2.22 (Woodford Co CH 13 at Front St Ph III\CADD\CADD Sheets\D416012-sht-xsc-E Mill.dgn

MAURER-STUTZ
ENGINEERS SURVEYORS

USER NAME = jdspiller	DESIGNED - CLD	REVISED -
	DRAWN - CAD	REVISED -
PLOT SCALE = 20.0000 ' / in.	CHECKED - JDS	REVISED -
PLOT DATE = 11/12/2024	DATE - 10/18/2024	REVISED -

WOODFORD COUNTY
HIGHWAY DEPARTMENT

COUNTY HIGHWAY 13 RECONSTRUCTION AT FRONT ST.
CROSS SECTIONS – EAST MILL STREET

SCALE: | SHEET 1 OF 2 SHEETS | STA.550+43.67 R1 TO STA. 552+00.00 R1

F.A.S. RTE.	SECTION	COUNTY	TOTAL SHEETS	SHEET NO.
364	20-00091-03-BR	WOODFORD	114	110
		CONTRACT NO. 89854		

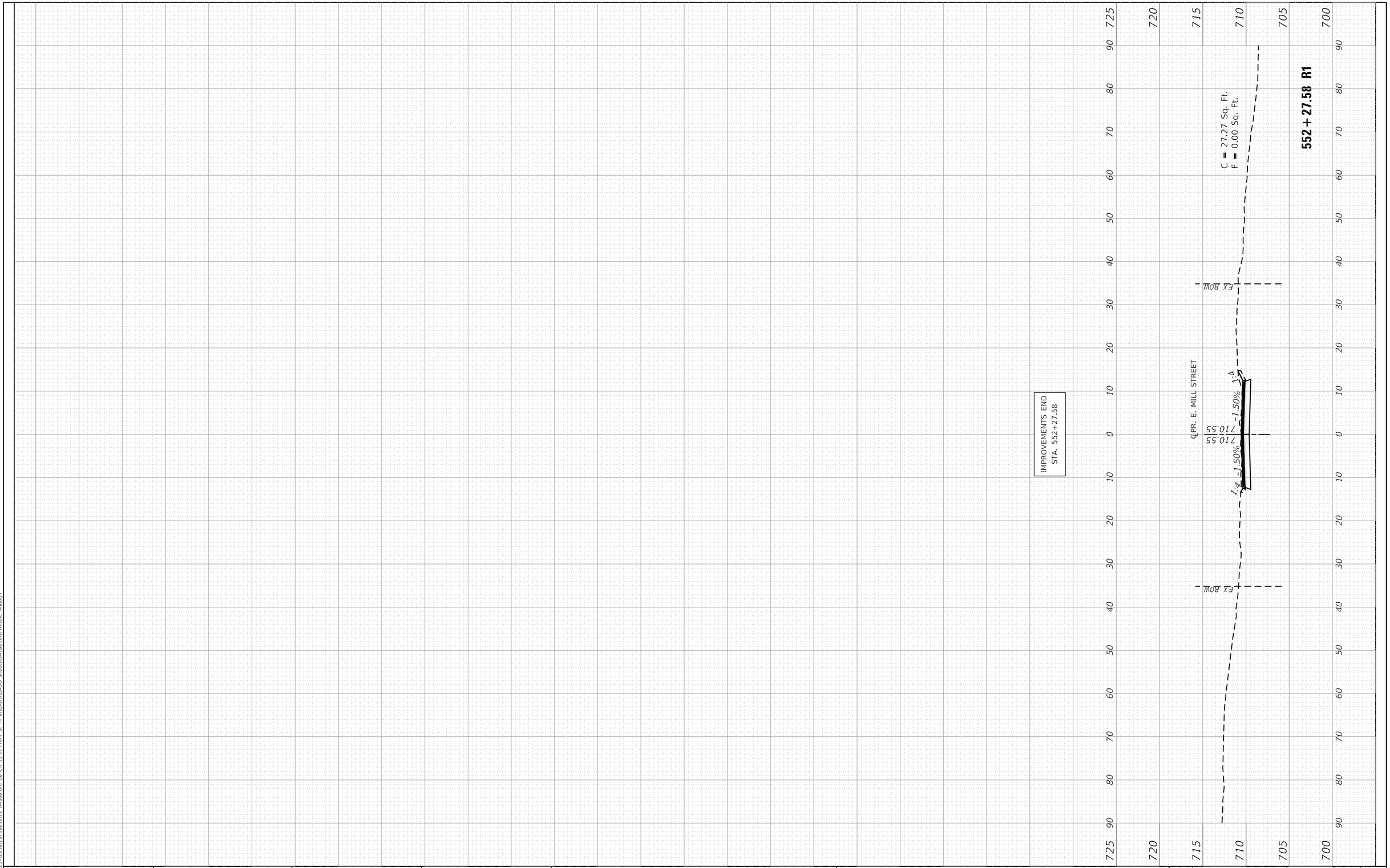

FINAL SURVEY		BY	DATE
NOTE BOOK	SURVEYED		
	PLOTTED		
	TEMPLATE		
	AREAS		
NO.	AREAS CHECKED		

ORIGINAL SURVEY		BY	DATE
NOTE BOOK	SURVEYED		
	PLOTTED		
	TEMPLATE		
	AREAS		
NO.	AREAS CHECKED		

MODEL: RCLPFMLA
FILE NAME: S:\2372016\2371602\22 (Woodford Co CH 13 at Front St Ph III\CADD\CADD Sheets\D416012-sht-xsc-E Mill.dgn

MAURER-STUTZ
ENGINEERS SURVEYORS

USER NAME = jdspiller	DESIGNED - CLD	REVISED -
	DRAWN - CAD	REVISED -
PLOT SCALE = 20.0000 ' / in.	CHECKED - JDS	REVISED -
PLOT DATE = 11/12/2024	DATE - 10/18/2024	REVISED -

WOODFORD COUNTY
HIGHWAY DEPARTMENT

COUNTY HIGHWAY 13 RECONSTRUCTION AT FRONT ST.
CROSS SECTIONS – EAST MILL STREET

SCALE: | SHEET 2 OF 2 SHEETS | STA.552+27.58 R1 TO STA. 552+27.58 R1

F.A.S. RTE.	SECTION	COUNTY	TOTAL SHEETS	SHEET NO.
364	20-00091-03-BR	WOODFORD	114	111
		CONTRACT NO. 89854		

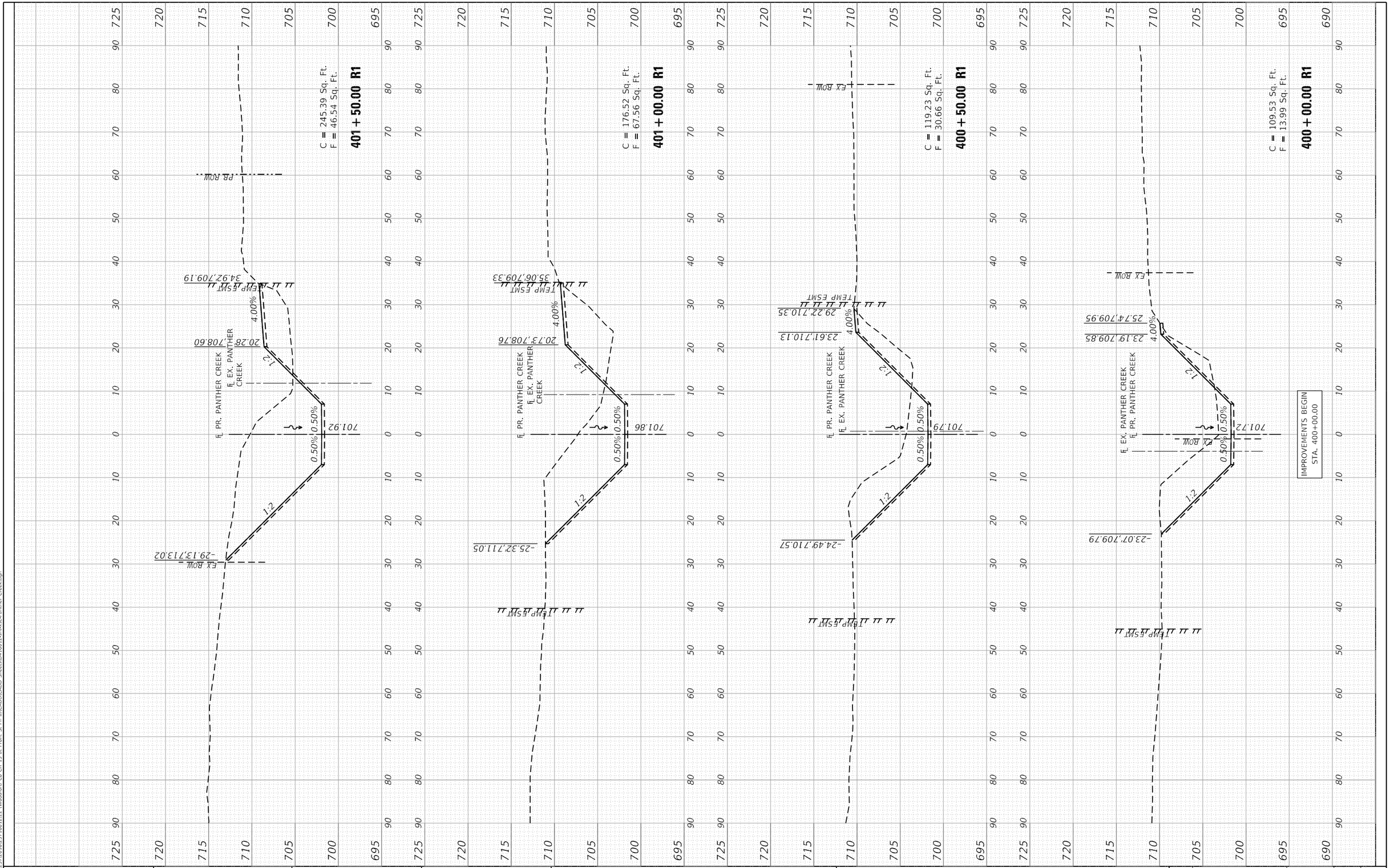

FINAL SURVEY		BY	DATE
NOTE BOOK	SURVEYED		
	PLOTTED		
	TEMPLATE		
	AREAS		
NO.	AREAS CHECKED		

ORIGINAL SURVEY		BY	DATE
NOTE BOOK	SURVEYED		
	PLOTTED		
	TEMPLATE		
	AREAS		
NO.	AREAS CHECKED		

MODEL: WFIPWBPCA
FILE NAME: S:\2372\2016\2371601\2.2 (Woodford Co CH 13 at Front St Ph III\CADD\CADD Sheets\D416012-sht-xsc-Panther Creek.dgn

MAURER-STUTZ
ENGINEERS SURVEYORS

USER NAME = jdspiller	DESIGNED - CLD	REVISED -	
	DRAWN - CAD	REVISED -	
PLOT SCALE = 20.0000 ' / in.	CHECKED - JDS	REVISED -	
PLOT DATE = 11/12/2024	DATE - 10/18/2024	REVISED -	

WOODFORD COUNTY
HIGHWAY DEPARTMENT

COUNTY HIGHWAY 13 RECONSTRUCTION AT FRONT ST.
CROSS SECTIONS – WEST BRANCH OF PANTHER CREEK

SCALE: | SHEET 1 OF 3 SHEETS | STA.400+00.00 R1 TO STA. 401+50.00 R1

F.A.S. RTE.	SECTION	COUNTY	TOTAL SHEETS	SHEET NO.
364	20-00091-03-BR	WOODFORD	114	112
		CONTRACT NO. 89854		

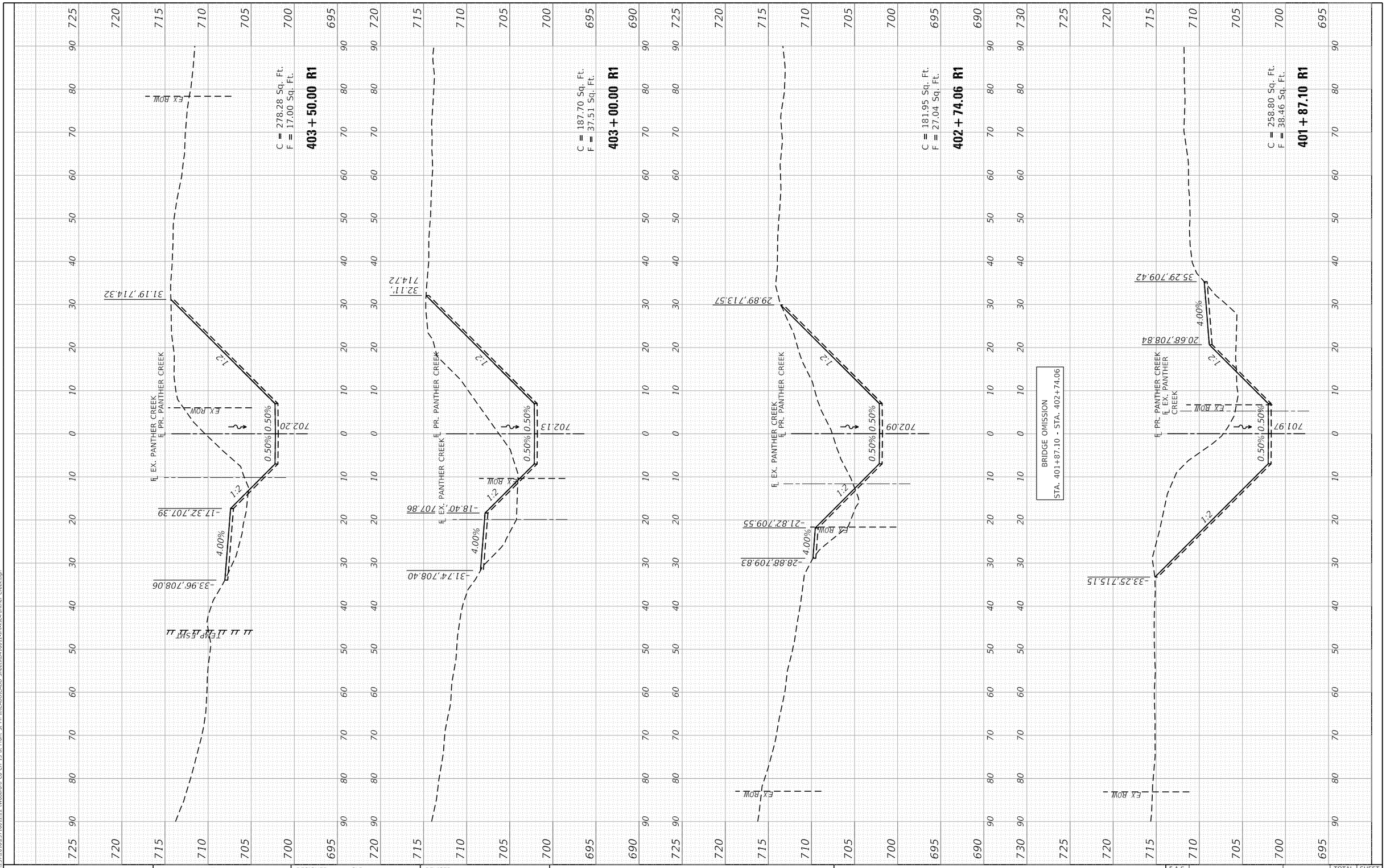

FINAL SURVEY		BY	DATE
NOTE BOOK	SURVEYED		
	PLOTTED		
	TEMPLATE		
	AREAS		
NO.	AREAS CHECKED		

ORIGINAL SURVEY		BY	DATE
NOTE BOOK	SURVEYED		
	PLOTTED		
	TEMPLATE		
	AREAS		
NO.	AREAS CHECKED		

MODEL: WFIPWBPCA
FILE NAME: S:\2372\2016\2371601\2.2 (Woodford Co CH 13 at Front St Ph III\CADD\CADD Sheets\D416012-sht-xsc-Panther Creek.dgn

MAURER-STUTZ
ENGINEERS SURVEYORS

USER NAME = jdspiller	DESIGNED - CLD	REVISED -
	DRAWN - CAD	REVISED -
PLOT SCALE = 20.0000 ' / in.	CHECKED - JDS	REVISED -
PLOT DATE = 11/12/2024	DATE - 10/18/2024	REVISED -

WOODFORD COUNTY
HIGHWAY DEPARTMENT

COUNTY HIGHWAY 13 RECONSTRUCTION AT FRONT ST.
CROSS SECTIONS – WEST BRANCH OF PANTHER CREEK

SCALE: | SHEET 2 OF 3 SHEETS | STA.401+87.10 R1 TO STA. 403+50.00 R1

F.A.S. RTE.	SECTION	COUNTY	TOTAL SHEETS	SHEET NO.
364	20-00091-03-BR	WOODFORD	114	113
		CONTRACT NO. 89854		

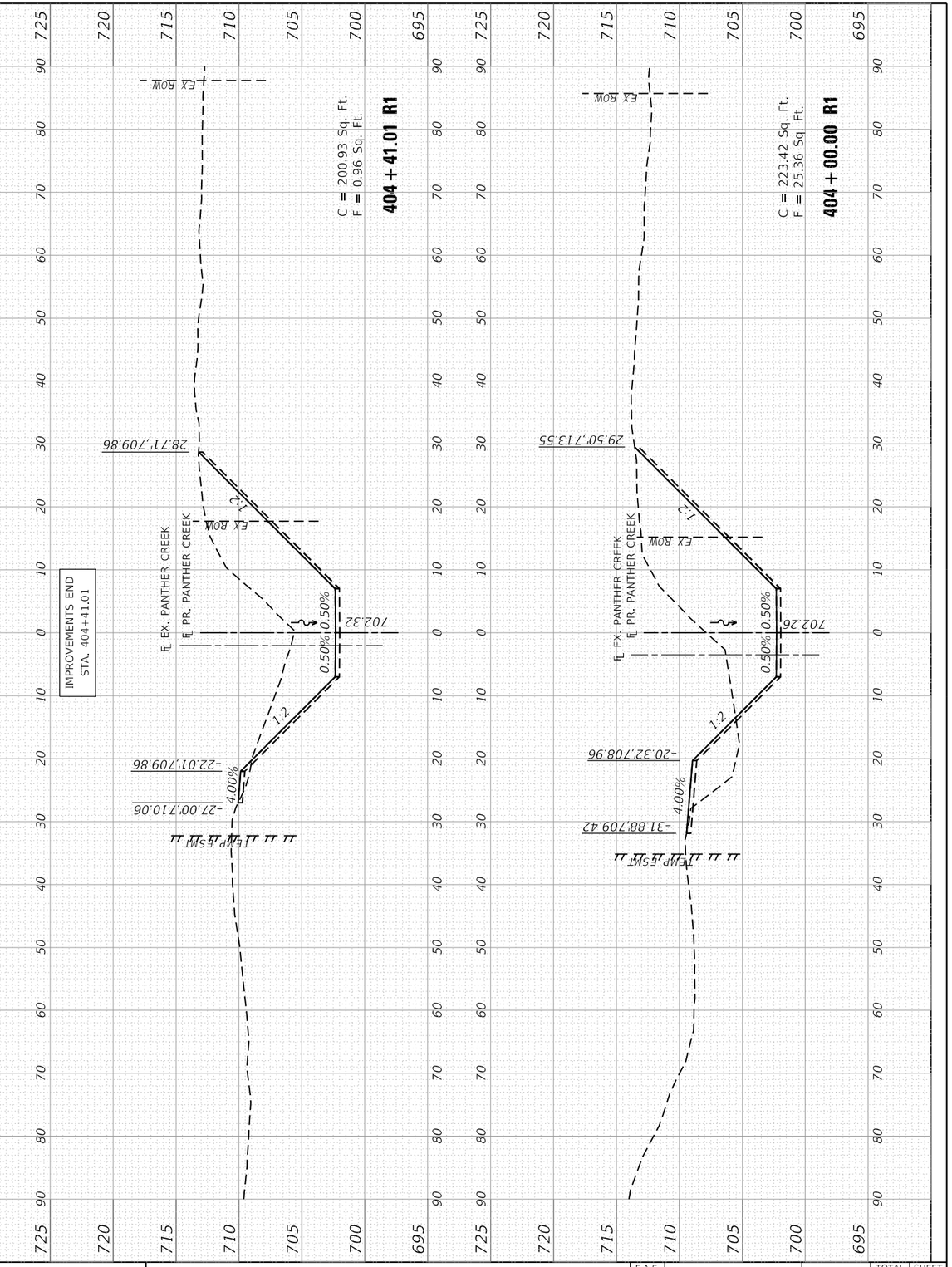

FINAL SURVEY		BY	DATE
NOTE BOOK	SURVEYED		
	PLOTTED		
	TEMPLATE		
	AREAS		
NO.	AREAS CHECKED		

ORIGINAL SURVEY		BY	DATE
NOTE BOOK	SURVEYED		
	PLOTTED		
	TEMPLATE		
	AREAS		
NO.	AREAS CHECKED		

MODEL: WFIPWBPCA
FILE NAME: S:\2372\2016\2371601\2.22 (Woodford Co CH 13 at Front St Ph III\CADD\CADD Sheets\D416012-sht-xsc-Panther Creek.dgn

MAURER-STUTZ
ENGINEERS SURVEYORS

USER NAME = jdspiller	DESIGNED - CLD	REVISED -
	DRAWN - CAD	REVISED -
PLOT SCALE = 20.0000 ' / in.	CHECKED - JDS	REVISED -
PLOT DATE = 11/12/2024	DATE - 10/18/2024	REVISED -

WOODFORD COUNTY
HIGHWAY DEPARTMENT

COUNTY HIGHWAY 13 RECONSTRUCTION AT FRONT ST.
CROSS SECTIONS – WEST BRANCH OF PANTHER CREEK

SCALE: | SHEET 3 OF 3 SHEETS | STA.404+00.00 R1 TO STA. 404+41.01 R1

F.A.S. RTE.	SECTION	COUNTY	TOTAL SHEETS	SHEET NO.
364	20-00091-03-BR	WOODFORD	114	114
		CONTRACT NO. 89854		