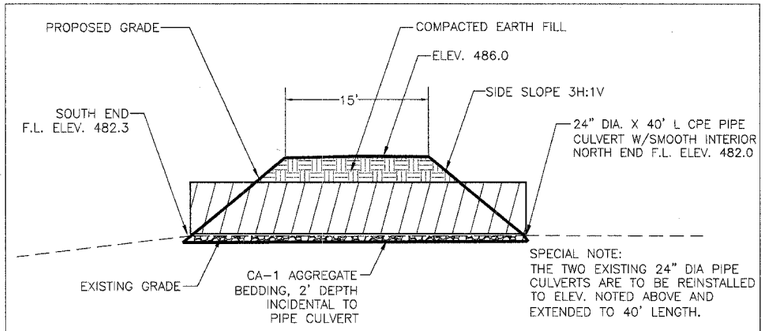

ACCESS ROAD CULVERT INSTALLATION

DETAIL A, TYPICAL SECTION, IDOT METHOD I

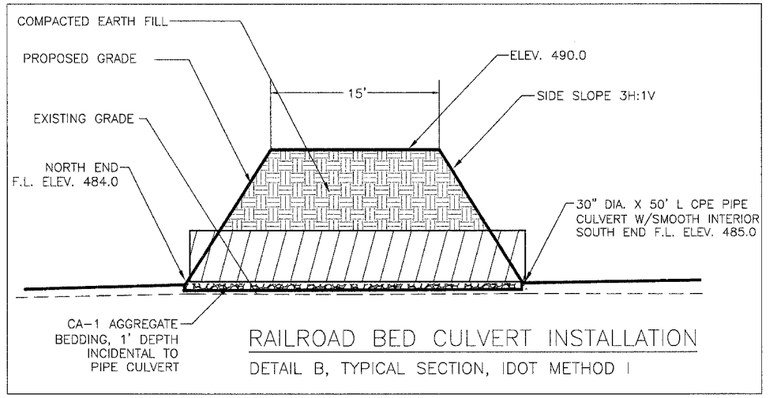

RAILROAD BED CULVERT INSTALLATION

DETAIL B, TYPICAL SECTION, IDOT METHOD I

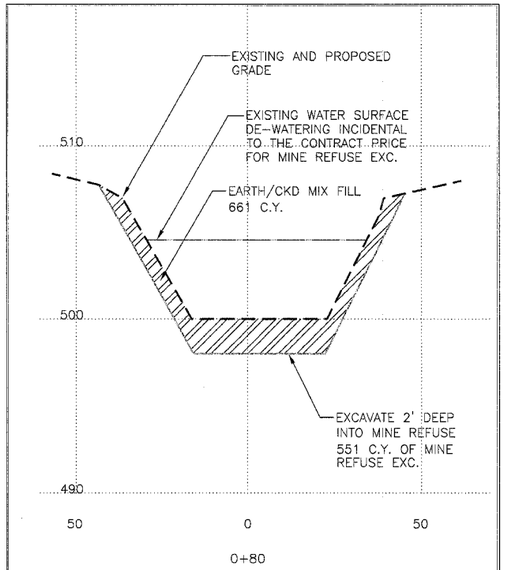

POND REPAIR

DETAIL F, TYPICAL SECTION

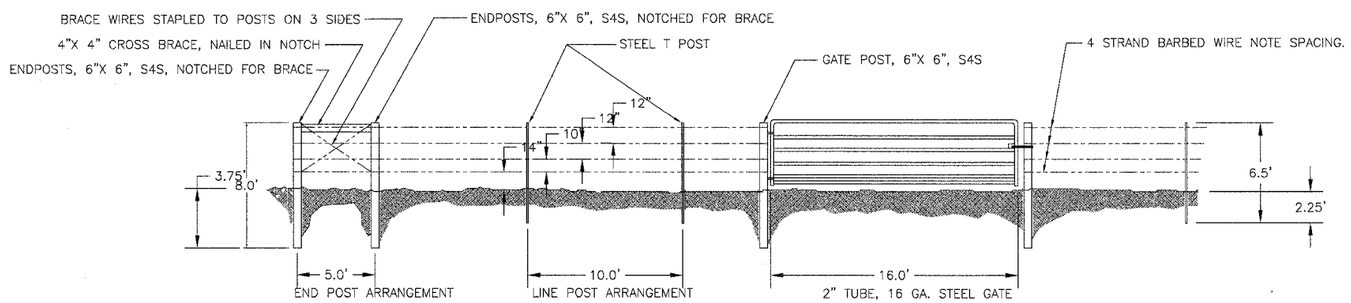

GATE AND FENCE DETAIL

DETAIL C, TYPICAL SECTION

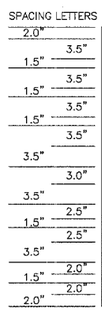

RECLAMATION PROJECT
of the
DEPARTMENT OF NATURAL RESOURCES
STATE OF ILLINOIS

Rod R. Blagojevich, Governor

10" dia.

Sam Flood, Acting Director
Department of Natural Resources

In cooperation with the Office of Surface Mining
United States Department of the Interior

1. Furnishing, erecting and removing the sign shall be incidental to the contract.
2. The sign shall be painted on 1/2" or thicker exterior plywood (4' x 8'), color shall be black on white, and a 10" diameter Illinois state seal shall be provided by the D.N.R.
3. The posts shall be made of 4" x 4" wood or 2.5" metal pipe, and shall be 10' long. The sign shall be securely fastened to the posts with six 2.5" long, round head wood screws (for wood posts) or four 5" long, 3/8" diameter carriage bolts (for wood or metal posts).
4. The top of the sign shall be level with the top of the posts, and the posts shall be 1' from the edges of the sign. The posts shall be set in the ground 3', so that the bottom of the sign is 3' from the ground.

CONSTRUCTION SIGN

DETAIL E, NOT TO SCALE

EXACT LOCATION TO BE SET BY ENGINEER

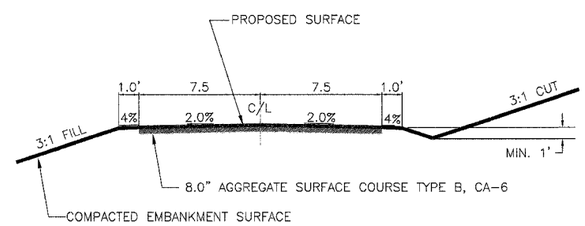

TYPICAL ROAD

DETAIL D, TYPICAL SECTION

State of Illinois
Department of Natural Resources

Delta Collieries North
Reclamation Project
AML-GWmE-0512
Williamson County

Drawn By: MT Date: 12/5/2007
Checked By:

Details Sheet

Sheet 29 of 29