STATE OF ILLINOIS
DEPARTMENT OF TRANSPORTATION

| ROUTE NO. | SECTION | COUNTY | TOTAL SHEETS | SHEET NO. |
|---|---|---|---|---|
| F.A.S. 1087 | 106T-1 | STEPHENSON | 78 | 39 |
| FED. ROAD DIST. NO. 2 | | ILLINOIS | FED. AID PROJECT- | |

SHEET NO. 08
13 SHEETS

Contract # 64C84

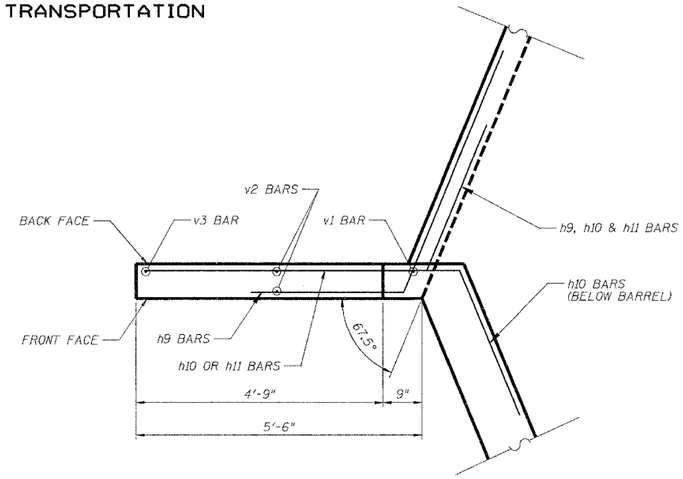


## WINGS A & D PLAN

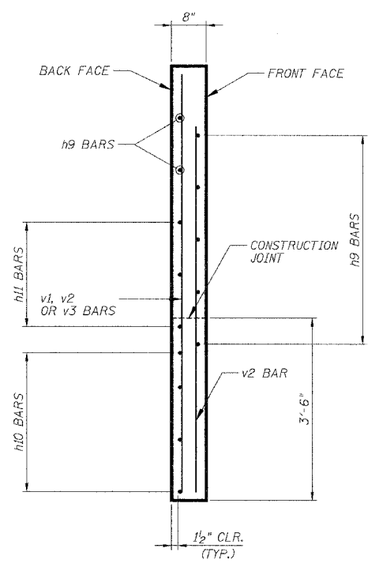


## WINGS A & D TYPICAL SECTION

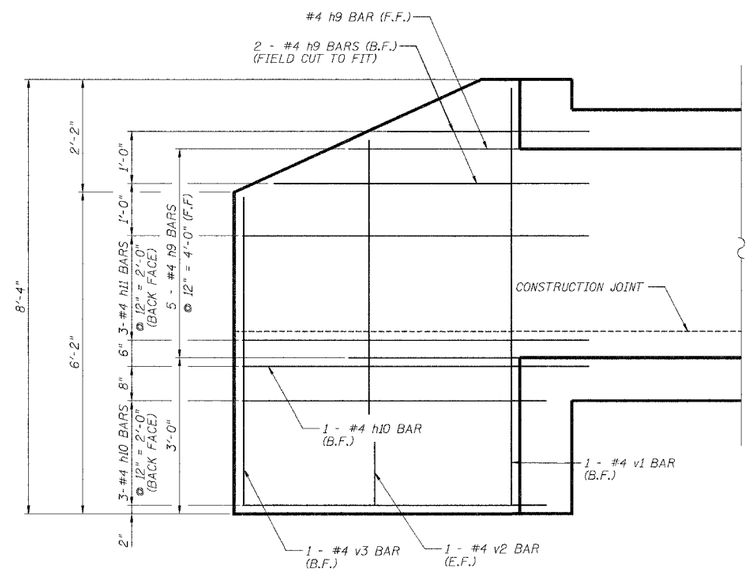


## WINGS A & D ELEVATION

**LEGEND**

B.F. = BACK FACE
F.F. = FRONT FACE
E.F. = EACH FACE

| | |
|---|---|
| DESIGNED - | WSP |
| CHECKED - | ASP |
| DRAWN - | BGC |
| CHECKED - | WSP |

WINGS A & D
F.A.S. 1087 IL. RTE. 73 OVER
UNAMED TRIBUTARY TO PECATONICA RIVER
SECTION 106T-1
STEPHENSON COUNTY
STATION 966+60.00
STRUCTURE NO. 089-1109