CONTRACT NO. 66600

F.A.I RTE.	SECTION	COUNTY	TOTAL SHEETS	SHEET NO.
80	(50-5) HBK-2	LASALLE	331	98
STA. 313+00.00 TO STA. 321+20.18				
FED. ROAD DIST. NO.	ILLINOIS	FED. AID PROJECT		

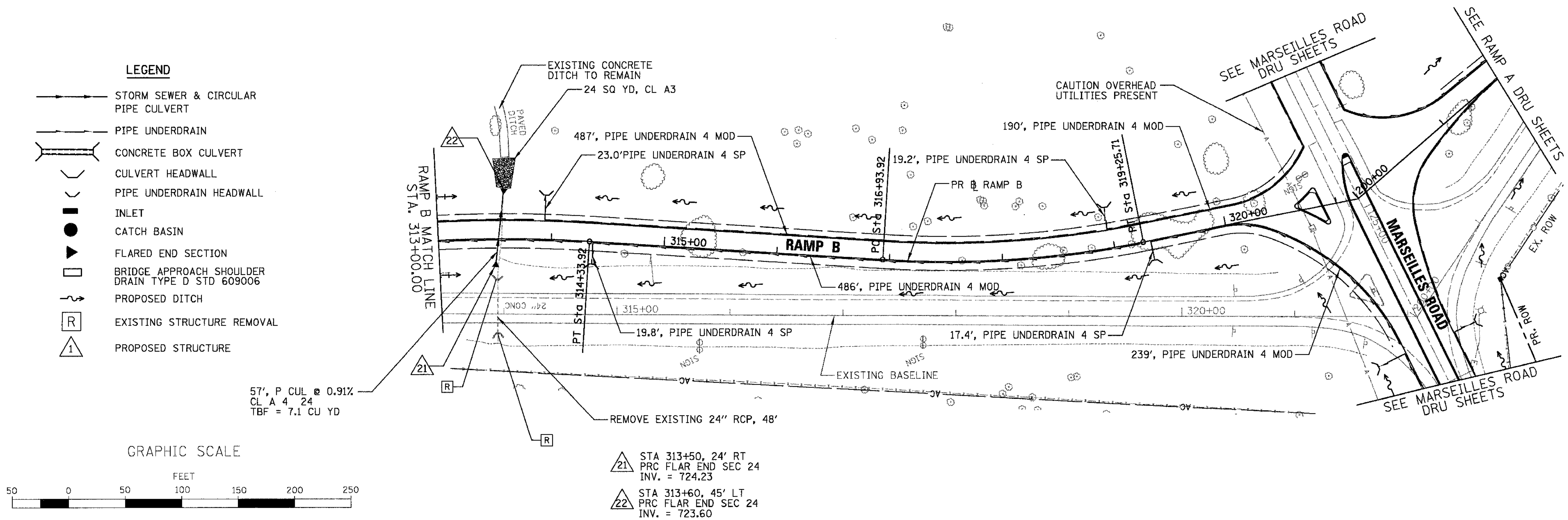

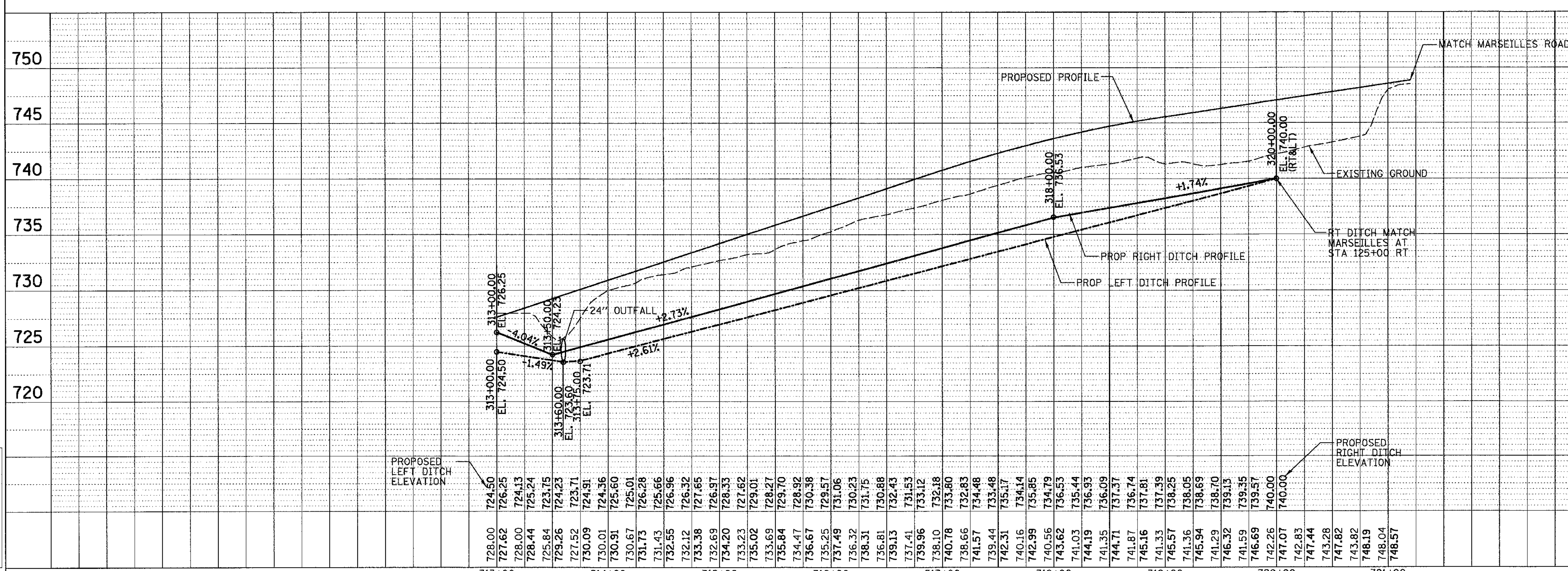

PLAN	SURVEYED	BY	DATE
NOTE BOOK	PLOTTED		
NO.	ALIGNMENT CHECKED		
	RT. OF WAY CHECKED		
	CADD FILE NAME		

PROFILE	SURVEYED	BY	DATE
NOTE BOOK	PLOTTED		
NO.	GRADES CHECKED		
	B.M. NOTED		
	STRUCTURE NOTAT'NS CH'KD		

Baker

Baker Engineering, Inc.

ILLINOIS DEPARTMENT OF TRANSPORTATION

DRAINAGE & UTILITY PLAN & PROFILE RAMP B

STA. 313+00.00 TO STA. 321+20.18

SCALE: HORIZ 1"=50' VERT 1"=5'

DATE: 11/02/07

DRAWN BY: RL

CHECKED BY: RM

Baker Baker Engineering, Inc.

h:\107496\3.0 deliverables\3.1 drainage\Design\Sheets\i80_DRU07.dru
11/5/2007