GENERAL PLAN AND ELEVATION

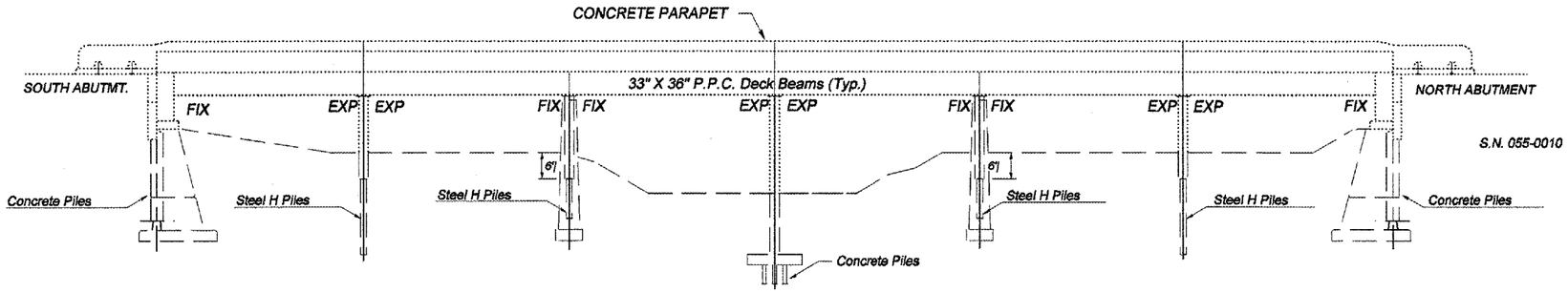

ELEVATION

NOTE 1:
* STATIONS SHOWN ON THESE PLANS (286+11.8.) IS ACCORDING TO 1970 SURVEY FOR THE PURPOSE OF RECONSTRUCTION. THE NAME PLATE SHALL READ "STATION 758+83.5" WHICH IS THE STATIONING OF THE ORIGINAL SURVEY AND THE REVERSE OF THOSE SHOWN.

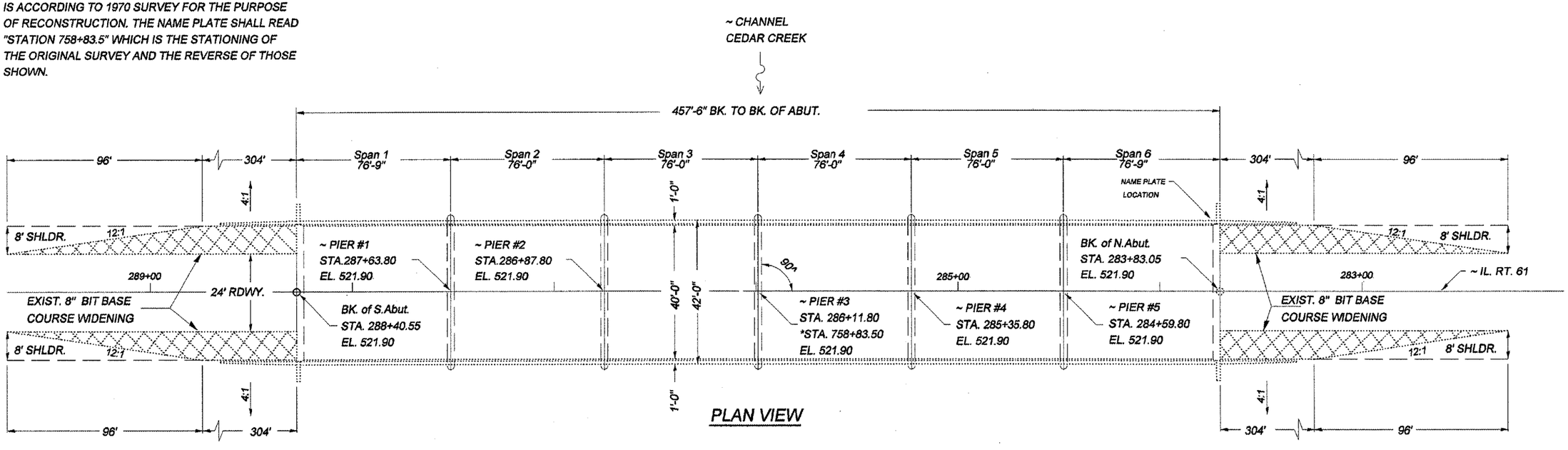

PLAN VIEW

FILE NAME = c:\projects\116bridge\plan01.dgn	USER NAME = mcfaddenjk	DESIGNED -	REVISED -	STATE OF ILLINOIS DEPARTMENT OF TRANSPORTATION	GENERAL PLAN AND ELEVATION	F.A.P RTE.	SECTION	COUNTY	TOTAL SHEETS / SHEET NO.
		DRAWN -	REVISED -			542	(105B)I-1	MCDONOUGH	13 / 8
	PLOT SCALE = 100.0000 ' / IN.	CHECKED -	REVISED -					CONTRACT NO. 68760	