CONTRACT NO. 72659

F.A.I. RTE.	SECTION	COUNTY	TOTAL SHEETS	SHEET NO.
*	**	SANGAMON	248	183
STA.		TO STA.		
FED. ROAD DIST. NO. _	ILLINOIS	FED. AID PROJECT		

* FAI55(I-55), FAI72(I-72), FAP666(I-55 BUS)
** D6 INTERSTATE RS,BR,M CAB 2008

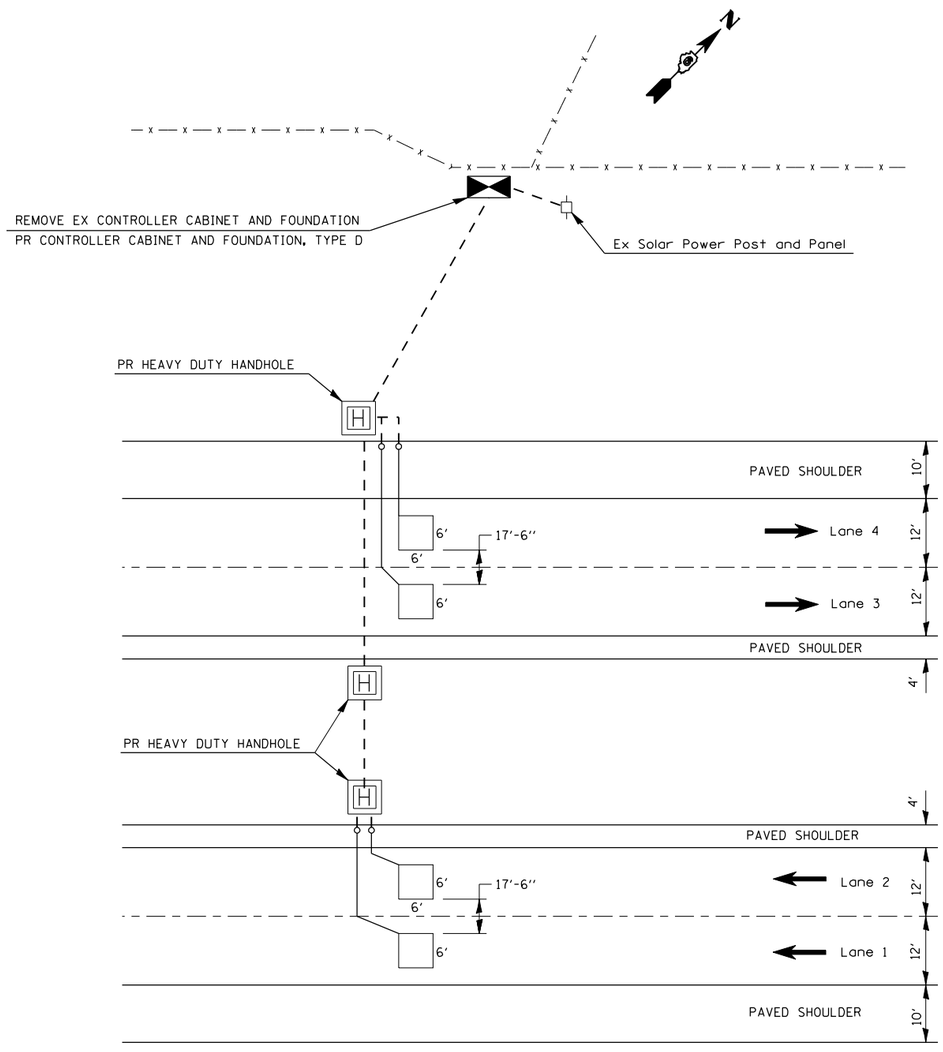

Layout for Traffic Counter
I-55 N. of West Lake Shore Dr.
STA 143+87

	SCHEDULE OF QUANTITIES		
CODE NO.	ITEM	UNIT	QUANTITY
73700200	REMOVE CONCRETE FOUNDATION - GROUND MOUNT	EACH	1
81012400	CONDUIT IN TRENCH, 1 1/4" DIA., PVC	FOOT	85
81012800	CONDUIT IN TRENCH, 3" DIA., PVC	FOOT	102
81021350	CONDUIT PUSHED, 3" DIA., PVC	FOOT	92
81400200	HEAVY-DUTY HANDHOLE	EACH	3
81500130	GULFBOX JUNCTION REMOVAL	EACH	2
86300305	CONTROLLER CABINET TYPE III, SPECIAL	EACH	1
87800200	CONCRETE FOUNDATION, TYPE D	FOOT	3
88600400	DETECTOR LOOP, SPECIAL	FOOT	203
X0323014	ELECTRIC CABLE IN CONDUIT, CONOGA-30003	FOOT	488
X0323016	ELECTRIC CABLE IN CONDUIT # 14-7STRAND XHHW XLP-600V	FOOT	44

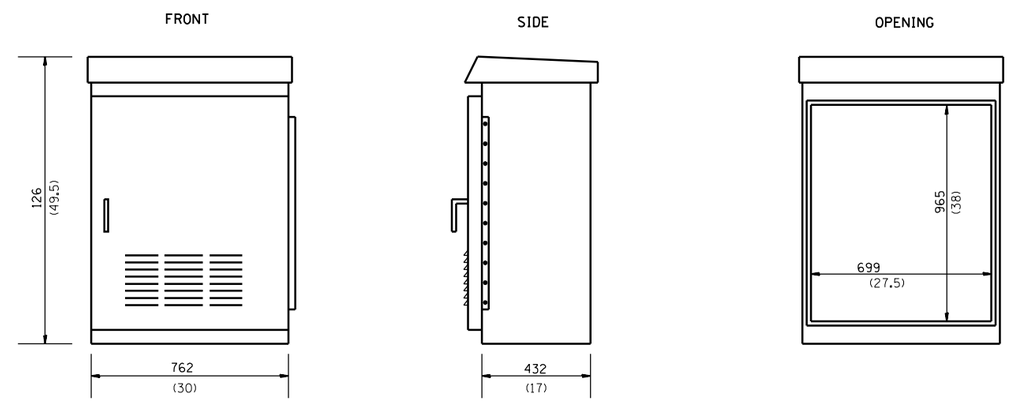

SINGLE DOOR CABINET

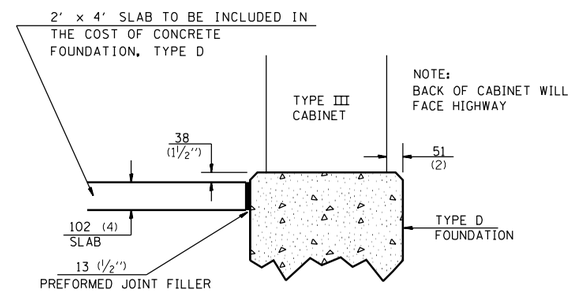

TYPE D FOUNDATION

TRAFFIC DATA COLLECTION CONTROL CABINET
SOURCE: HENNESSY PRODUCTS INC. OR APPROVED EQUAL
MODEL: HP 503017
MATERIAL: ALUMINUM ALLOY - TYPE NO. 5052-H32
NEMA TYPE: 3R-12-4-4X
CABINET FINISH: NATURAL ALUMINUM

REVISIONS	
NAME	DATE

ILLINOIS DEPARTMENT OF TRANSPORTATION

TRAFFIC COUNTER DETAILS

FAI55(I-55), FAI72(I-72), FAP666(I-55 BUS)
SECTION D6 INTERSTATE RS,BR,M CAB 2008
SANGAMON COUNTY

SCALE: 1" = 100' DRAWN BY TEC
DATE CHECKED BY

PLOT DATE = Nov-19-2007 08:28:59AM
FILE NAME = c:\projects\d652802\sht_trafcount.dgn
PLOT SCALE = 105.8824 ' / IN.
USER NAME = loughlinrl