ROUTE NO.	SECTION	COUNTY	TOTAL SHEETS	SHEET NO.
		Sangamon	5	4
FED. ROAD DIST. NO. 7		ILLINOIS	FED. AID PROJECT-	

SHEET NO. 1
2 SHEETS

Contract Number: 72B51

STATE OF ILLINOIS
DEPARTMENT OF TRANSPORTATION

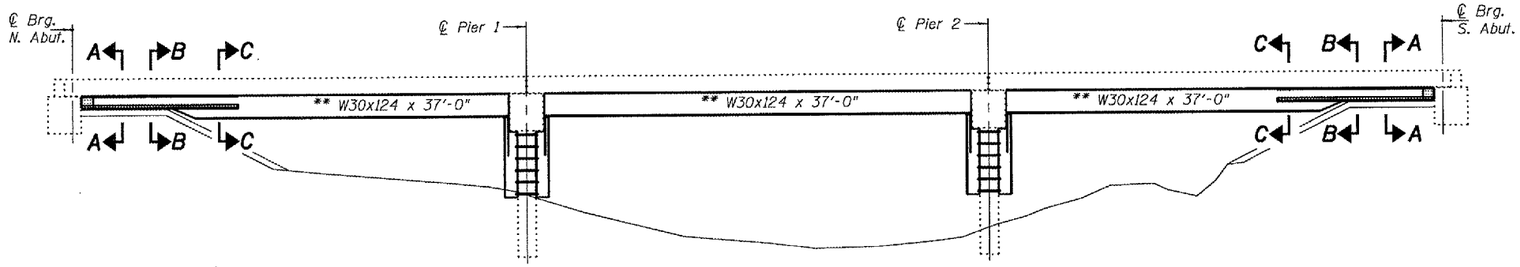

ELEVATION

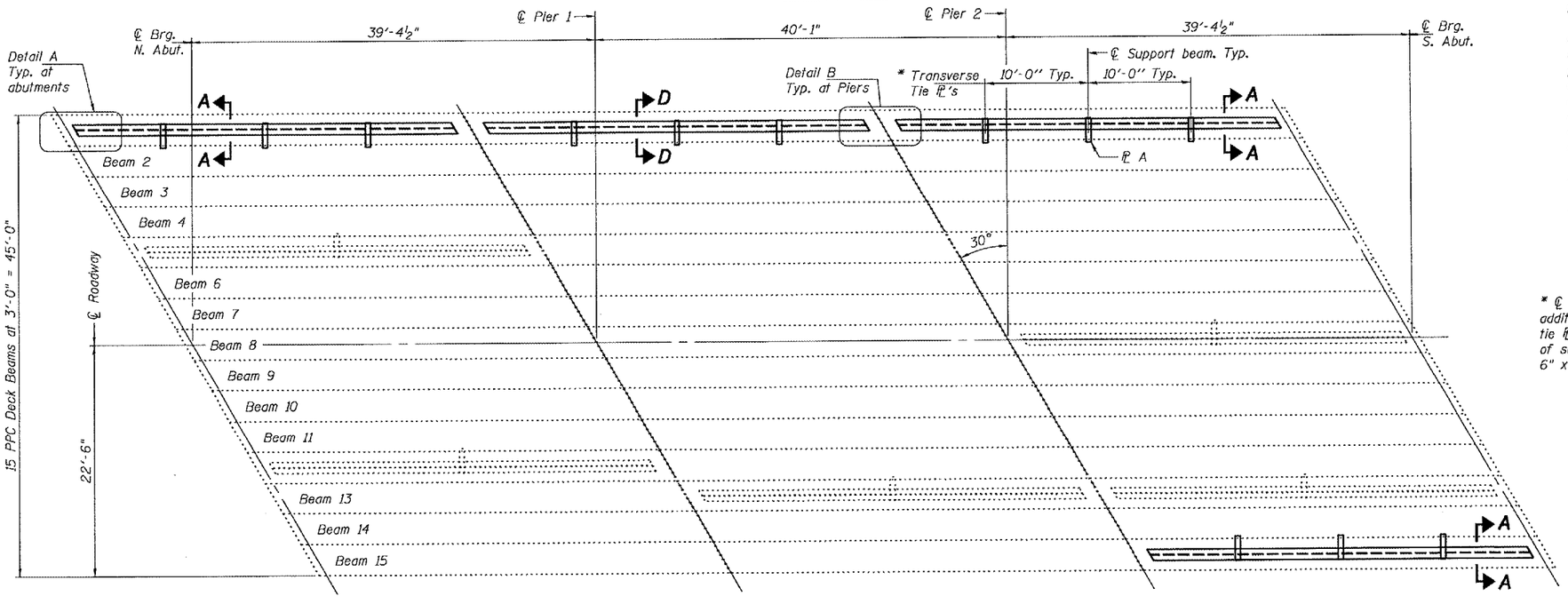

PLAN

* ℄ Tansverse tie ℙ's (3 per span). Place additional shims at midpoints between tie ℙ's. Securely weld shims to top flange of support beam. Min. shim size is 6" x flange width.

GENERAL NOTES

All structural steel shall conform to AASHTO Classification M-270 Gr. 36, unless otherwise noted.

Plan dimensions and details relative to existing plans are subject to routine variations. The Contractor shall field verify existing dimensions and details affecting new construction and make necessary approved adjustments prior to construction or ordering of materials. Such variations shall not be cause for additional compensation for a change in scope of the work, however, the Contractor will be paid for the quantity actually furnished based upon the unit price bid for the work.

The contractor is advised that the existing PPC Deck Beams are in a deteriorated condition with reduced load carrying capacity. It is the contractors responsibility to account for the condition of the beams when developing construction procedures.

See Section 584 of the Standard Specifications for Epoxy Grouting of Threaded Rods; Minimum embedment 9".

If the contractor's procedure for placement of beams involves placement of cranes or other heavy equipment on the bridge, a detailed procedure shall be submitted to the Engineer for approval. The procedure shall include calculations, prepared and sealed by an Illinois Licensed Structural Engineer, verifying that the equipment and procedure used will not overstress the existing beams. To distribute load to multiple beams and protect the existing surface, in all cases a double layer mat of heavy timbers shall be used at all times under crane tracks or wheels and any outriggers in the down position. If necessary, shims shall be used under the crane mat to ensure uniform contact with the underlying beams.

The cost of epoxy grouting threaded rods on the pier cap and beams shall be included with Furnishing and Erecting Structural Steel.

The cost of any excavation required shall be included with Furnishing and Erecting Structural Steel.

The Contractor has the option of using used steel. See Special Provisions.

For Section D-D see Sheet 2 of 2.

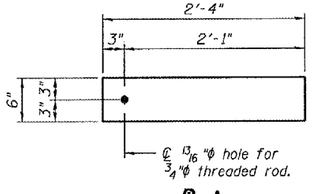

ℙ A

ℙ ½" x 6" x 2'-4"
(12 req'd)

**Contractor is to verify beam length prior to ordering material. Other sections meeting the section modulus requirements shown may be allowed subject to approval by the Bureau of Bridges and Structures. Maximum Girder depth = 33". No additional payment will be allowed if the contractor chooses a heavier steel section than the one specified in the plans

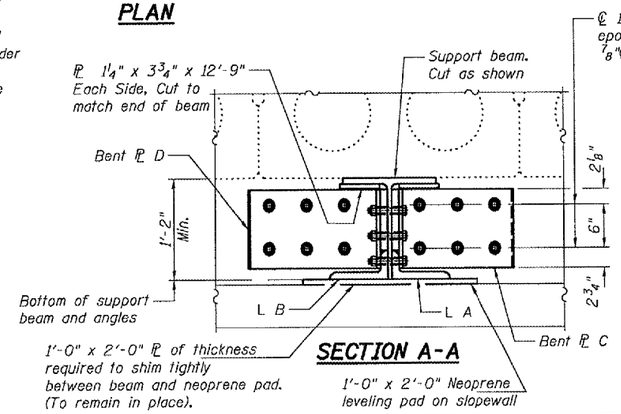

SECTION A-A

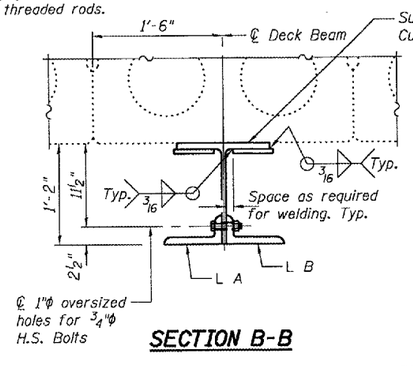

SECTION B-B

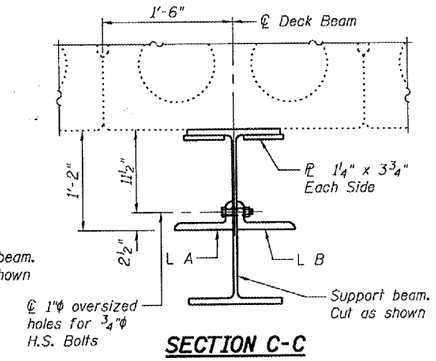

SECTION C-C

TOTAL BILL OF MATERIAL

ITEM	UNIT	QUANTITY
Furnishing and Erecting Structural Steel	Pound	26,890

PLAN AND ELEVATION
RT 4 OVER POLECAT CREEK
SANGAMON COUNTY
SN 084-0172

DESIGNED	Brian A Bali
CHECKED	Allison T. Halloway
DRAWN	
CHECKED	ATH

November 1, 2007

EXAMINED — ENGINEER OF STRUCTURAL SERVICES

PASSED — ENGINEER OF BRIDGES AND STRUCTURES

STATE OF ILLINOIS
RALPH E. ANDERSON
081-004625
SPRINGFIELD
LICENSED STRUCTURAL ENGINEER

Expires: November 30, 2008

\deck beams fy08\0840172.dgn 11/1/2007 11:19:32 AM