ROUTE NO.	SECTION	COUNTY	TOTAL SHEETS	SHEET NO.
F.A.P. 310	60-15HB	MADISON	195	88
FED. ROAD DIST. NO.	ILLINOIS	FED. AID PROJECT-		

SHEET NO. 13
20 SHEETS

CONTRACT NO. 76626

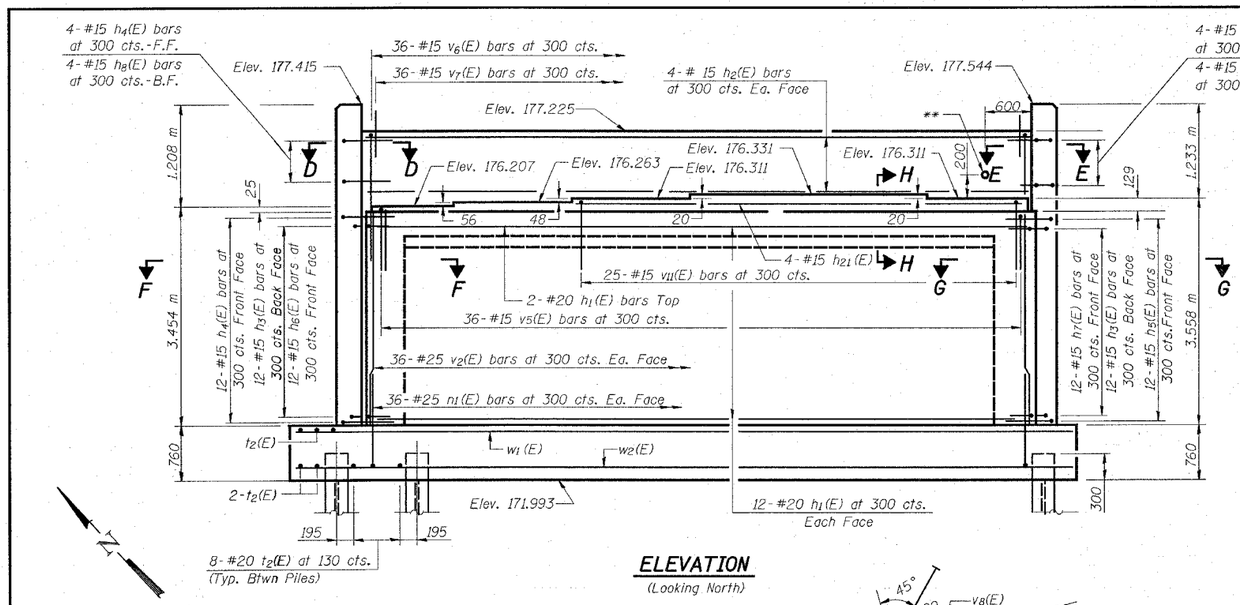

ELEVATION

(Looking North)

NOTE: Interior of vault to be sand filled to bottom of slab.

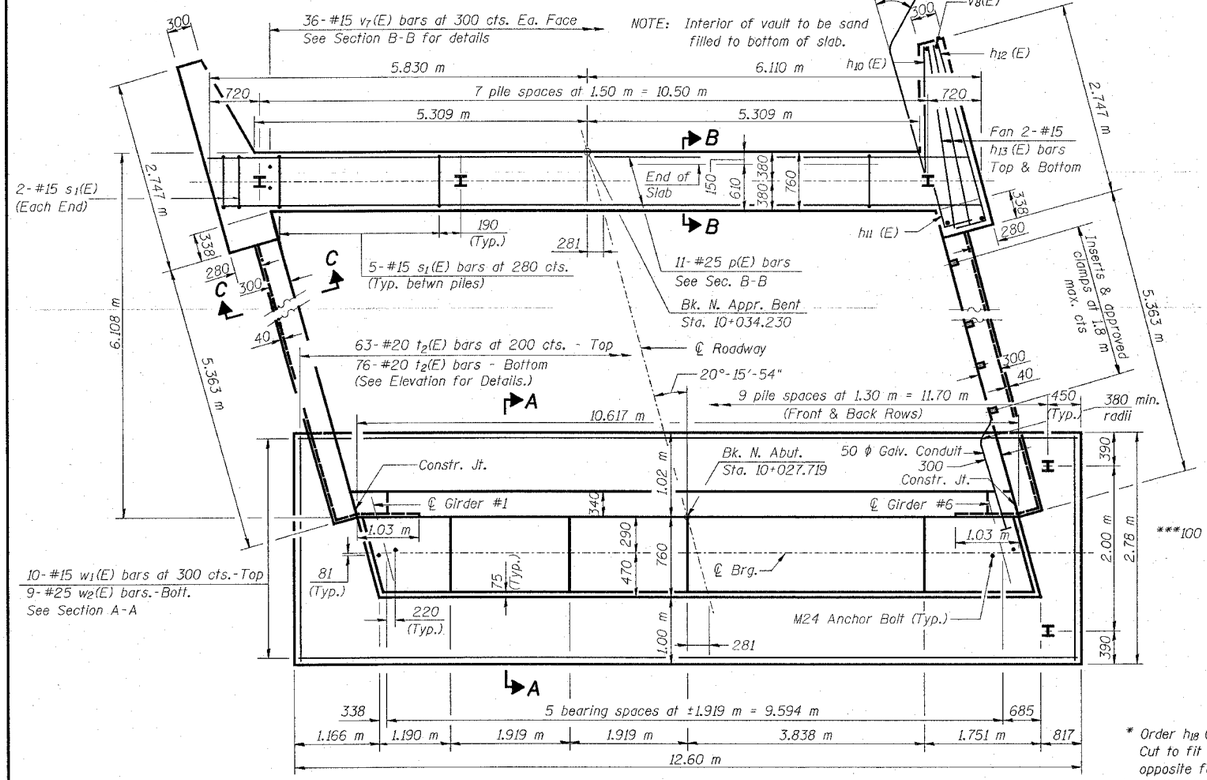

PLAN

** 50 mm ϕ Galvanized Conduit (Sch. 40 pipe) shall conform to the requirements of ANSI C 80.1 or UL 1242. Thread and cap each end. Extend to clear end of wingwall and terminate at a point outside of the shoulder. Cost Included with Concrete Structures. See sheet #2 of 20.

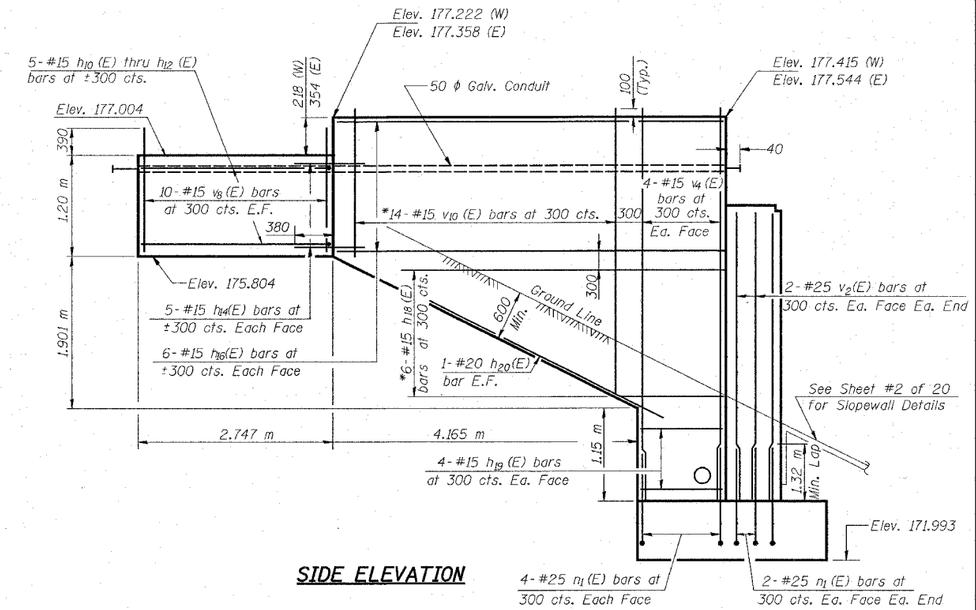

SIDE ELEVATION

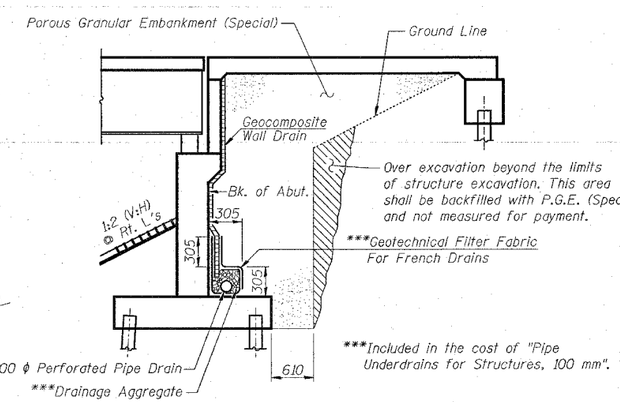

***Included in the cost of "Pipe Underdrains for Structures, 100 mm".

SECTION THRU ABUTMENT

Note:
All drainage system components shall extend parallel to the abutment back wall through a formed hole in each curtain wall. The pipe shall extend until intersecting the side slopes. The pipes shall drain into concrete headwalls. (See Article 601.05 of the Standard Specifications and Highway Standard 601101).

APPR. BENT-PILE DATA

Type: HP 200x54 Piles
Nominal Required Bearing: 1273 kN
Allowable Resistance Available: 424 kN
Est. Length: 15.9 m
No. Req'd.: 7 + 1 test pile

ABUT.-PILE DATA

Type: HP 310x79 Piles
Nominal Required Bearing: 1862 kN
Allowable Resistance Available: 620 kN
Est. Length: 12.2 m
No. Req'd.: 20

Notes: For Section Thru Abutment & Reinforcement Bars See Sheet #14 of 20.
Space reinforcement in cap to miss anchor bolts.
Pour steps monolithically with cap.
Reinforcement bars designated (E) shall be epoxy coated

* Order h18(E) and v10(E) bars full length. Cut to fit and use remainder of bars in opposite face. See Field Cutting Diagram on Sheet #14 of 20.

LIN ENGINEERING, LTD.
200 N. Chestnut Chatham, Illinois 62629
(217) 483-4168 FAX (217) 483-4706
Designed By: MTH Checked By: PDL Drawn By: JMD
Date: 05/03 File: 060030SE.DGN

REVISIONS	
NAME	

ILLINOIS DEPARTMENT OF TRANSPORTATION

NORTH ABUTMENT
WENZEL ROAD OVER F.A.P. RTE. 310
SECTION 60-15HB
MADISON COUNTY
STA. 036+335.990 (FAP 310)
STA. 10+000.000 (WENZEL ROAD)
STRUCTURE NO. 060-0306