CONTRACT NO. 83985

F.A.U RTE.	SECTION	COUNTY	TOTAL SHEETS	SHEET NO.
1512	05-00093-00-WR	DUPAGE	72	26
STA.		TO STA.		
FED. ROAD DIST. NO. 1	ILLINOIS	FED. AID PROJECT		

PROJECT NO.: M-8003 (699)

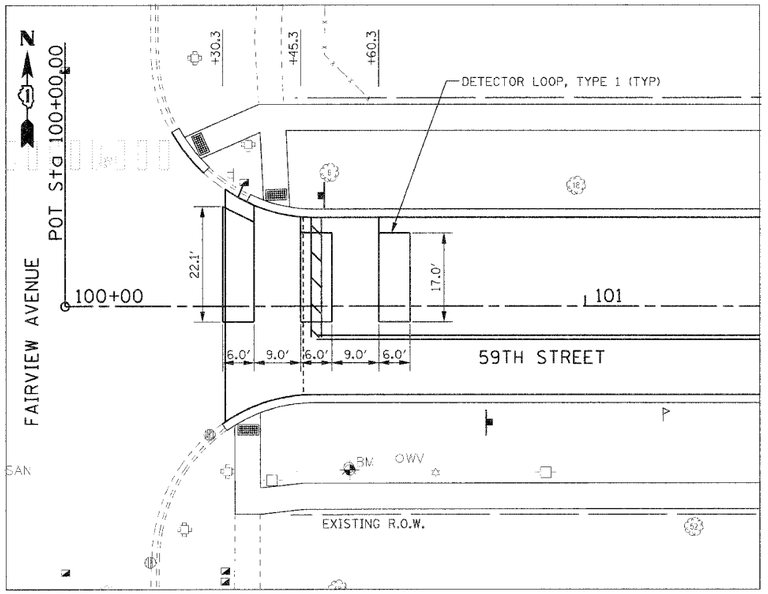

LAYOUT FOR DETECTOR LOOP, TYPE 1

NOT TO SCALE

REFER TO PROPOSED PAVEMENT MARKING PLANS FOR STRIPING DETAILS.

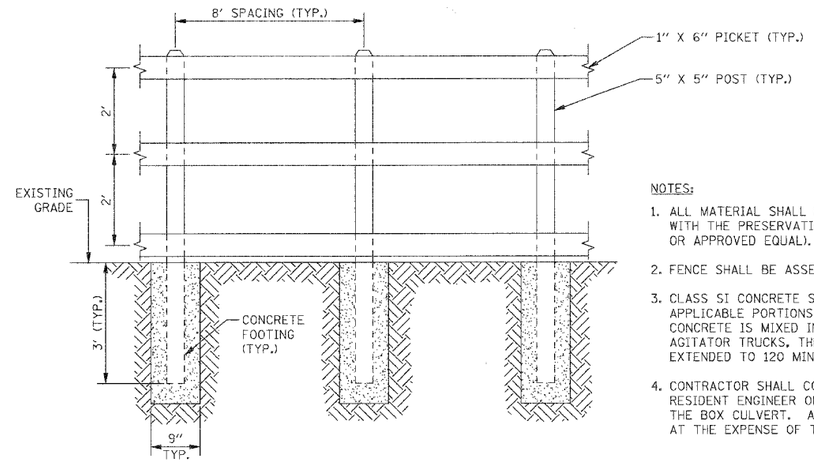

NOTES:

1. ALL MATERIAL SHALL BE SOUTHERN YELLOW PINE IMPREGNATED WITH THE PRESERVATIVE, COPPER NAPHTHENATE (COPPERWOOD OR APPROVED EQUAL).
2. FENCE SHALL BE ASSEMBLED BY FACE NAILING.
3. CLASS SI CONCRETE SHALL BE USED CONFORMING TO THE APPLICABLE PORTIONS OF SECTION 1020, EXCEPT THAT IF THE CONCRETE IS MIXED IN TRANSIT MIXERS OR TRANSPORTED IN AGITATOR TRUCKS, THE TIME LIMIT FOR UNLOADING IT MAY BE EXTENDED TO 120 MINUTES BY THE ENGINEER.
4. CONTRACTOR SHALL COORDINATE WITH THE VILLAGE AND THE RESIDENT ENGINEER ON THE NON-STANDARD POST SPACING OVER THE BOX CULVERT. ANY DAMAGE TO THE BOX CULVERT SHALL BE AT THE EXPENSE OF THE CONTRACTOR.

WOOD FENCE

OR AS SPECIFIED BY THE VILLAGE OF WESTMONT
NOT TO SCALE

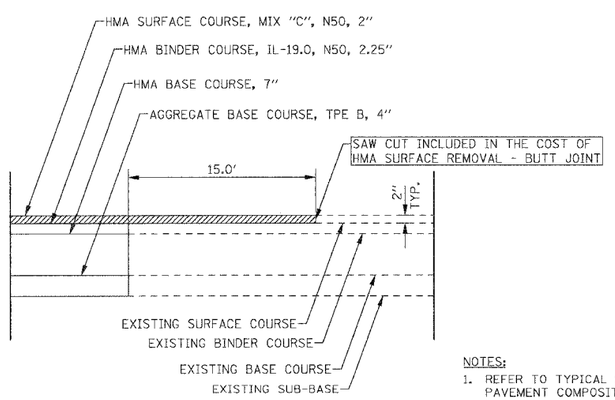

PAVEMENT BUTT JOINT

NOT TO SCALE

NOTES:

1. REFER TO TYPICAL SECTIONS FOR ADDITIONAL PAVEMENT COMPOSITION INFORMATION.
2. REFER TO REMOVAL AND PROPOSED PLANS FOR LOCATIONS OF BUTT JOINTS.
3. SAW CUTS AND MILLING FOR BUTT JOINT IS CONSIDERED INCLUDED IN THE COST FOR HMA SURFACE REMOVAL - BUTT JOINT.

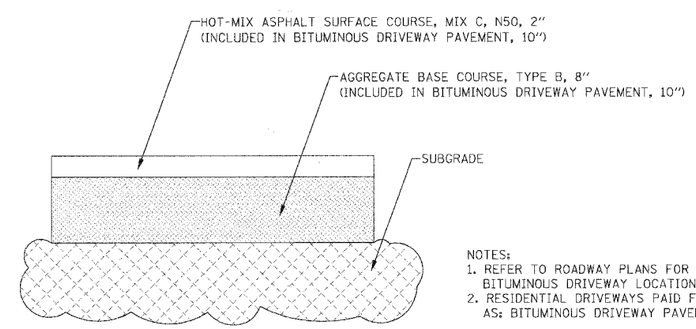

NOTES:

1. REFER TO ROADWAY PLANS FOR BITUMINOUS DRIVEWAY LOCATIONS.
2. RESIDENTIAL DRIVEWAYS PAID FOR AS: BITUMINOUS DRIVEWAY PAVEMENT, 10"

BITUMINOUS DRIVEWAY PAVEMENT SECTION

NOT TO SCALE

REVISIONS NAME	DATE

ILLINOIS DEPARTMENT OF TRANSPORTATION

VILLAGE OF WESTMONT
59TH STREET RECONSTRUCTION

MISCELLANEOUS ROADWAY DETAILS

SCALE: N.T.S. DRAWN BY: JMT
DATE: 09/21/07 CHECKED BY: AJB

PLAN | SURVEYED | PLOTTED | ALIGNMENT CHECKED | RIGHT-OF-WAY CHECKED | PAID FILE NAME: | NOTE BOOK NO. | BY | DATE

PROFILE | SURVEYED | PLOTTED | GRADES CHECKED | RAILWAY CHECKED | STRUCTURE NO(S)/NBI CHKD | NOTE BOOK NO. | BY | DATE

PLOT DATE = $DATE$
FILE NAME = $FILEL$
PLOT SCALE = $SCALE$
USER NAME = $USER$