| F.A.U. RTE. | SECTION | COUNTY | TOTAL SHEETS | SHEET NO. |
|---|---|---|---|---|
| 2508 | 02-00039-00-PV | KENDALL | 146 | 110 |
| STA. | | TO STA. | | |
| FED. ROAD DIST. NO. | ILLINOIS | FED. AID PROJECT | | |

S-10

87333

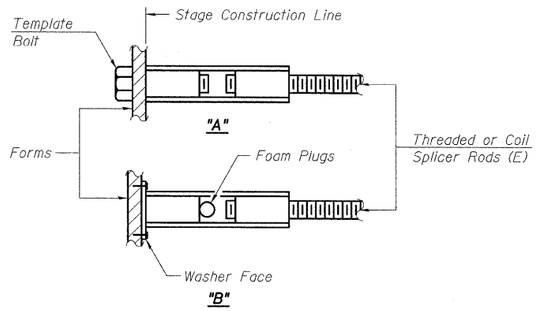


## INSTALLATION AND SETTING METHODS

"A" : Set bar splicer assembly by means of a template bolt.
"B" : Set bar splicer assembly by nailing to wood forms or cementing to steel forms.
(E) : Indicates epoxy coating.

## NOTES

Bar splicer assemblies shall be of an approved type and shall develop in tension at least 125 percent of the yield strength of the lapped reinforcement bars.

Splicer rods shall be of minimum 60 ksi yield strength, threaded or coiled full length.

All reinforcement bars shall be lapped and tied to the splicer rods or dowel bars.

Bar splicer assemblies shall be epoxy coated according to the requirements for reinforcement bars.

Other systems of similar design may be submitted to the Engineer for approval. Approval shall be based on certified test results from an approved testing laboratory that the proposed bar splicer assembly satisfies the following requirements:

1. Minimum Capacity (Tension in kips) $= 1.25 \times fy \times A_t$
2. Minimum *Pull-out Strength (Tension in kips) $= 1.25 \times fs_{allow} \times A_t$

Where $fy$ = Yield strength of lapped reinforcement bars in ksi.
$fs_{allow}$ = Allowable tensile stress in lapped reinforcement bars in ksi (Service Load)
$A_t$ = Tensile stress area of lapped reinforcement bars.
* = 28 day concrete

BAR SPLICER ASSEMBLIES

| Bar Size to be Spliced | Splicer Rod or Dowel Bar Length | Strength Requirements | |
|---|---|---|---|
| | | Min. Capacity kips - tension | Min. Pull-Out Strength kips - tension |
| #4 | 1'-8" | 14.7 | 5.9 |
| #5 | 2'-0" | 23.0 | 9.2 |
| #6 | 2'-7" | 33.1 | 13.3 |
| #7 | 3'-5" | 45.1 | 18.0 |
| #8 | 4'-6" | 58.9 | 23.6 |
| #9 | 5'-9" | 75.0 | 30.0 |
| #10 | 7'-3" | 95.0 | 38.0 |
| #11 | 9'-0" | 117.4 | 46.8 |

Bar splicer assemblies shall be according to Section 508 of the Standard Specifications, except as noted. The furnishing and installation of bar splicer assemblies will be measured and paid for at the contract unit price each for "BAR SPLICERS."

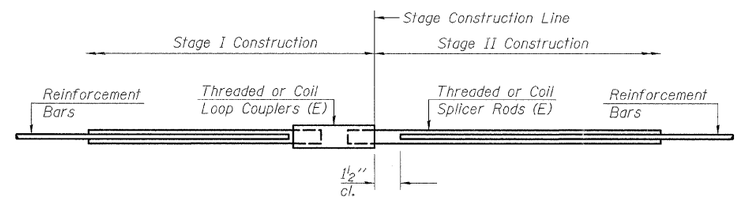


## STANDARD

| Bar Size | No. Assemblies Required | Location |
|---|---|---|
| #5 | 80 | See Parapet Wall & Ftg. |
| | | |
| | | |
| | | |
| | | |


Illinois Professional Design Firm # 184-000108
SEC GROUP, INC.
Smith Engineering Consultants • SEC Automation • SEC Planning
4500 Prime Pkwy, McHenry, IL 60050-2136
t. 815.385.1776 f. 815.385.1781
www.secgroupinc.com engineering@secgroupinc.com


ILLINOIS DEPARTMENT OF TRANSPORTATION
F.A.U. 2508 – DOUGLAS ROAD
(U.S. RTE 34 TO U.S. RTE 30)
BAR SPLICER DETAILS
DOUGLAS ROAD OVER WAUBONSEE CREEK
SECTION 02-00039-00-PV, STA. 49+42
SN 047-6306, KENDALL COUNTY

SCALE: VERT. HORIZ.
DRAWN BY
DATE
CHECKED BY

PLAN | SURVEYED | PLOTTED | ALIGNMENT CHECKED | GRADES CHECKED | CADD FILE NAME | NOTE BOOK NO. | BY | DATE

PROFILE | SURVEYED | PLOTTED | GRADES CHECKED | ALIGNMENT CHECKED | STRUCTURE NOTATNS CHKD | NOTE BOOK NO. | BY | DATE

$TIME$
$DATE$
$FILE$