CONTRACT NO. 88518

F.A. RTE.	SECTION	COUNTY	TOTAL SHEETS	SHEET NO.
315	*	FULTON	324	91
STA.		TO STA.		
FED. ROAD DIST. NO.	ILLINOIS	FED. AID PROJECT		

*109W-1,RS-2:110W,RS-1

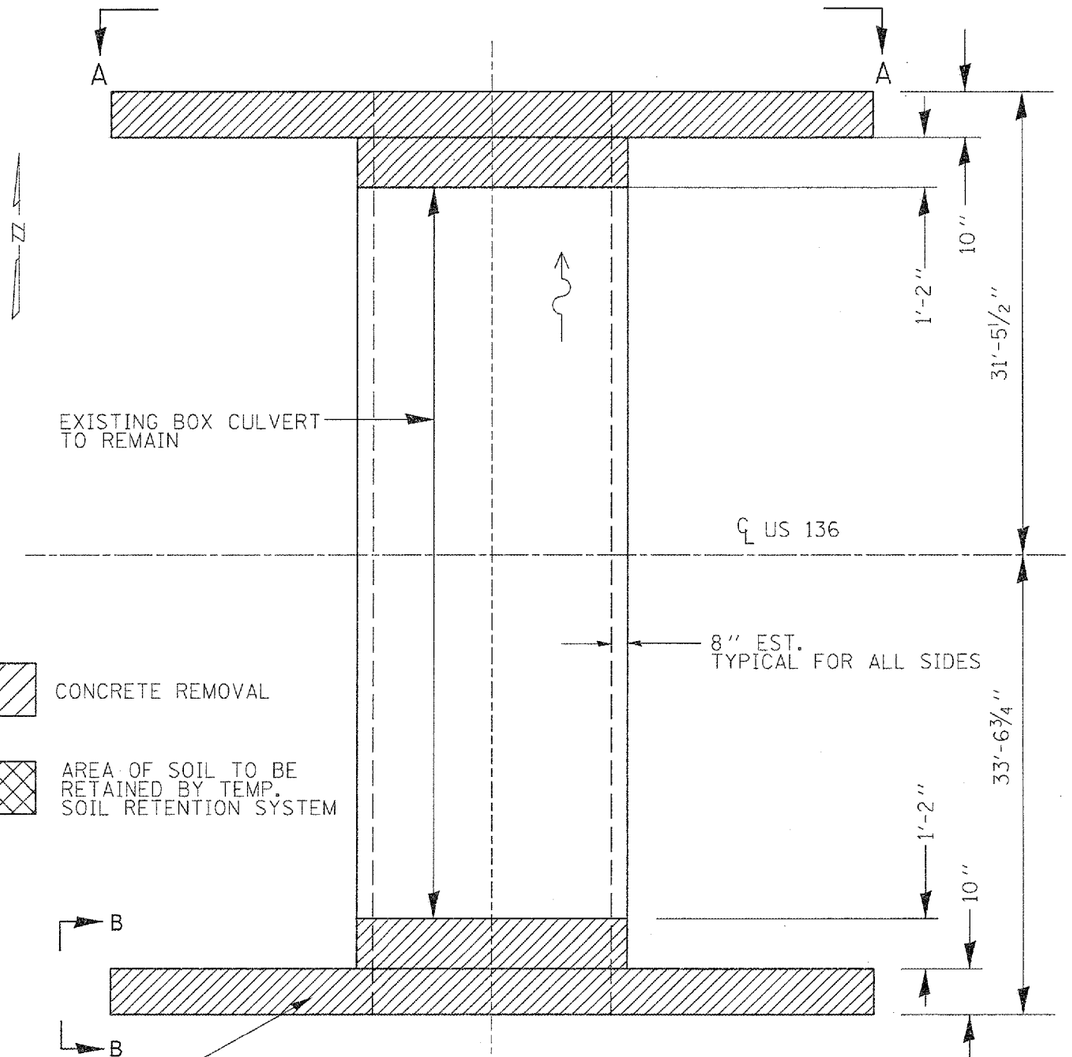

CONCRETE REMOVAL PLAN

CONCRETE REMOVAL

AREA OF SOIL TO BE RETAINED BY TEMP. SOIL RETENTION SYSTEM

EXISTING REINFORCED CONCRETE HEADWALL AND PARTIAL CONCRETE BOX CULVERT TO BE REMOVED

NOTE

EXISTING LONGITUDINAL REINFORCMENT BARS IN BOX SHALL BE CLEANED, STRAIGHTENED AND INCORPORATED INTO THE NEW CONSTRUCTION.

TEMPORARY SOIL RETENTION SYSTEM WILL BE USED TO RETAIN SOIL BEHIND HEADWALL IN ORDER TO REMOVE HEADWALL AND SECTION OF EXISTING CULVERT ON EACH END

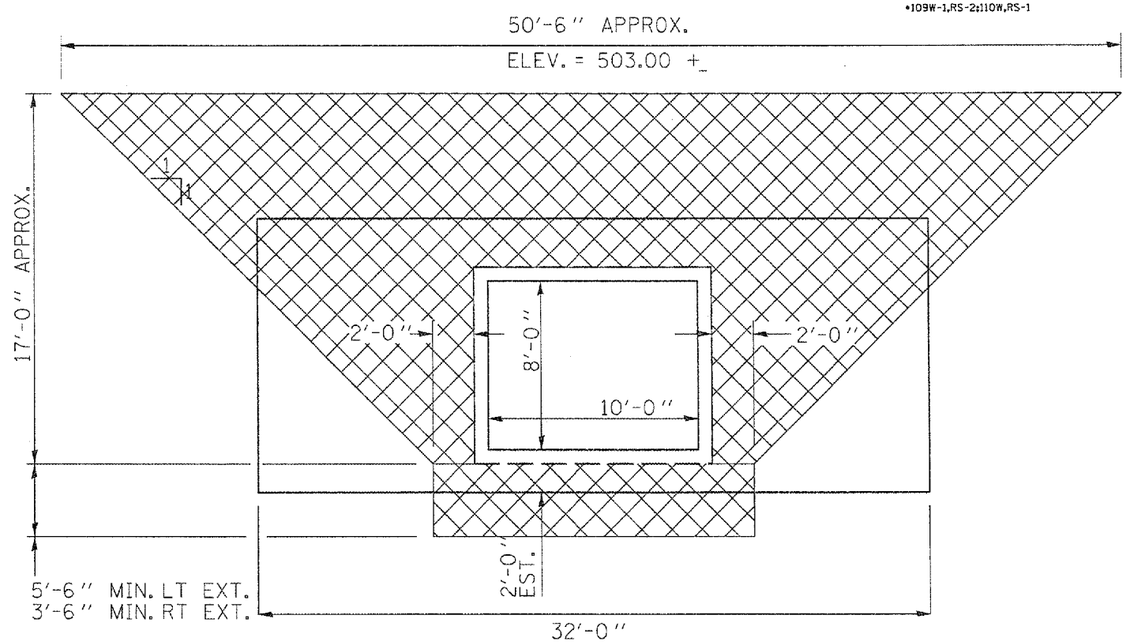

SECTION A-A

TYPICAL UPSTREAM AND DOWNSTREAM

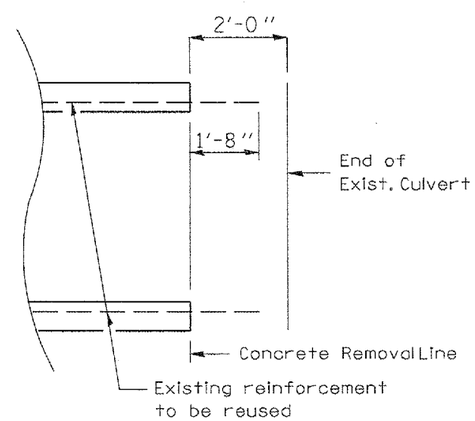

EXISTING REINFORCEMENT DETAIL

Typical both ends of Culvert
Top and Bottom Slabs and Sidewalls

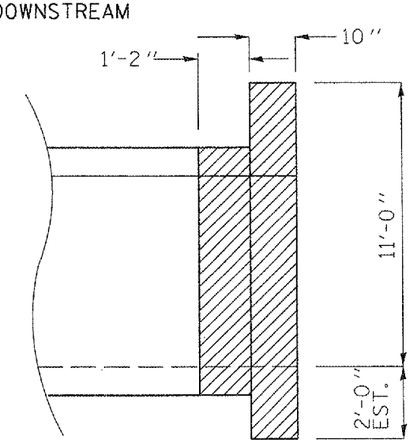

SECTION B-B

TYPICAL UPSTREAM AND DOWNSTREAM

REVISIONS	
NAME	DATE

ILLINOIS DEPARTMENT OF TRANSPORTATION

10 X 8 BOX CULVERT
HEADWALL REMOVAL DETAIL
STATION 601+79.18

SCALE: VERT. HORIZ.

DATE 02/28/2006

DRAWN BY CEM

CHECKED BY

PLOT DATE = $DATE$
FILE NAME = $FILEL$
PLOT SCALE = $SCALE$
USER NAME = $USER$

D:\us136UW\Rem120207.dgn 12/4/2007 2:48:25 PM