CONTRACT: 98990
ROUTE: INTERSTATE 24
SECTION: (64-3B) I-6
COUNTY: MASSAC, IL; McCRACKEN, KY
SHEET 56 OF 99
FOR INFORMATION ONLY

F.A.I. RTE.	SE			
24	64-3B-1-3	*	32	7
F.A.A.I. REG.	ILLINOIS	PROJECT		

*MASSAC, IL. & McCRACKEN, KY.

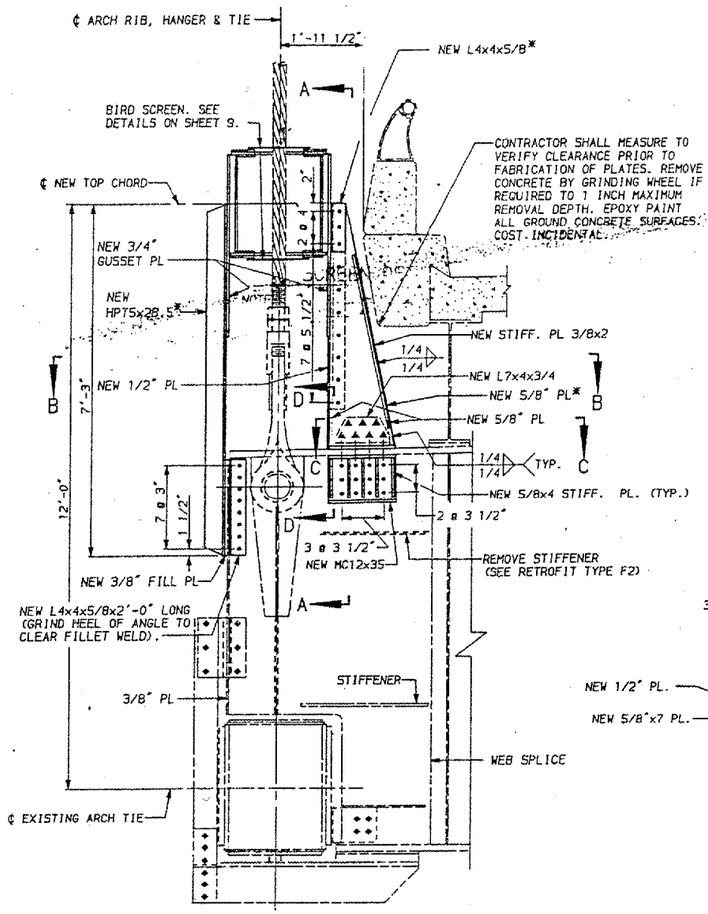

⚠ TYPICAL SECTION AT FLOORBEAM (T2 SHOWN)

◆ DENOTES EXISTING 7/8"ø H.S. BOLT IN EXISTING HOLE.

⚠ NOTE: FOR BOLT SPACING NOT SHOWN, SEE TYPICAL DETAIL SHEET 6.

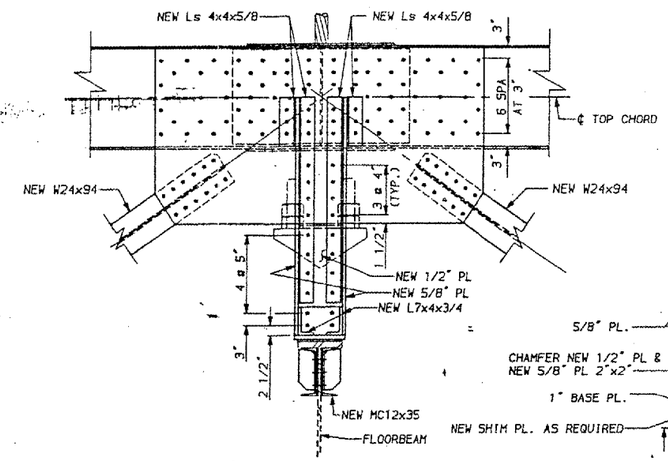

⚠ SECTION A-A

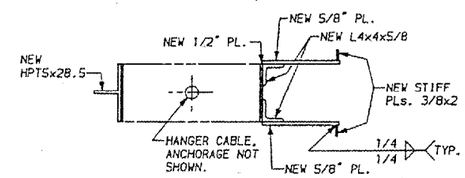

SECTION B-B

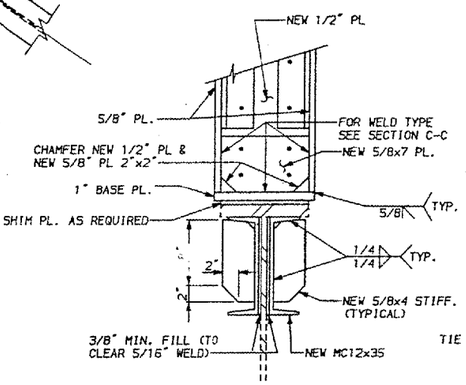

⚠ SECTION D-D

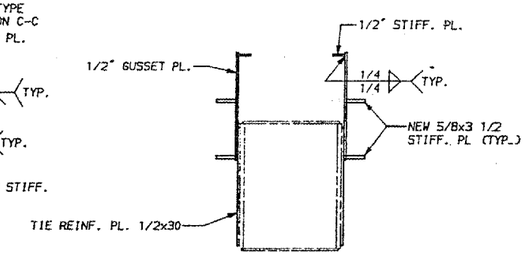

⚠ SECTION F-F

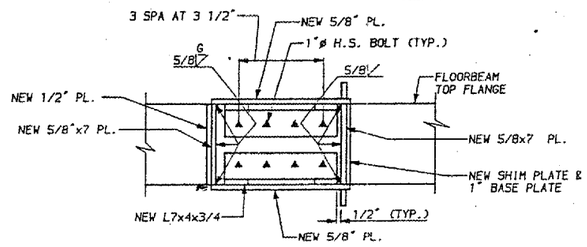

⚠ SECTION C-C

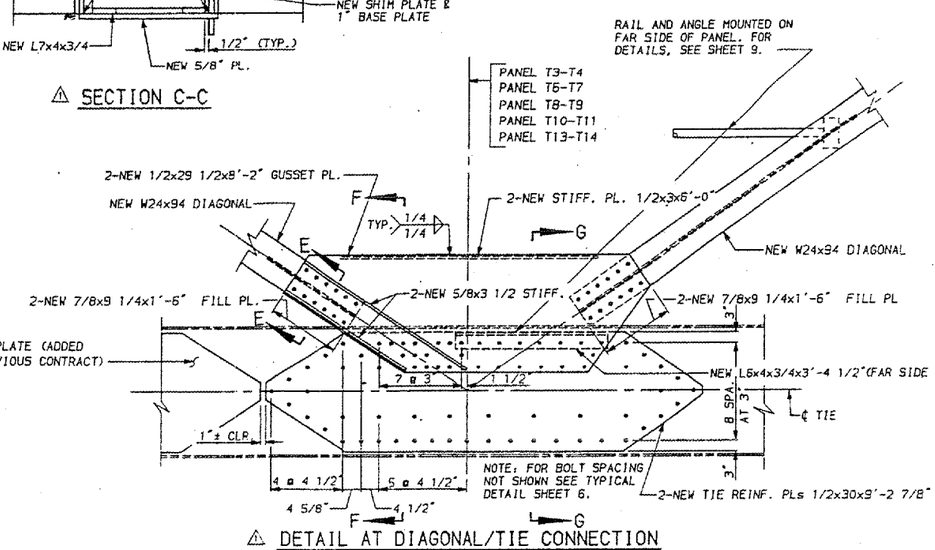

⚠ DETAIL AT DIAGONAL/TIE CONNECTION

PANEL T6-T7 (WEST ARCH SHOWN) FOR TYPICAL DETAILS SEE SHEETS 6 AND 9

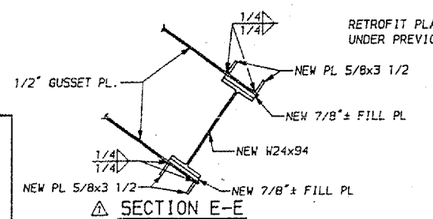

⚠ SECTION E-E

NOTES:

FOR GENERAL NOTES, SEE SHEET 3.
• DENOTES NEW 7/8"ø H.S. BOLT IN NEW HOLE.
✳ VERTICAL MEMBERS SHALL BE TRULY VERTICAL. FOR RETROFIT TYPE F2, SEE SHEET 19.
▲ DENOTES NEW 1"ø H.S. BOLT (AASHTO M 164) IN NEW HOLE.
⚠ ALL NEW STRUCTURAL STEEL SHOWN SHALL MEET NOTCH TOUGHNESS REQUIREMENTS (N.T.R.) EXCEPT RAIL, STIFFENERS AND ANGLE SHOWN ON DETAIL AT DIAGONAL/TIE CONNECTION.
⚠ FOR SECTION G-G, SEE SHEET 9.

REV. NO	DRAWN	CHKD.	APPD.	DESCRIPTION	DATE
1	SLH	REM	JEP	MISCELLANEOUS	10/26/88

PREPARED BY
MODJESKI AND MASTERS
CONSULTING ENGINEERS

DRAWN: CWM
CHKD: REM
APPD: JEP
DATE: 10/11/88

F A I ROUTE 24 (INTERSTATE 24)
OVER OHIO RIVER
MASSAC COUNTY ILLINOIS

UNIT II
TRUSS DETAILS - 2