STATE OF ILLINOIS
DEPARTMENT OF TRANSPORTATION

ROUTE	SECTION	COUNTY	TOTAL SHEETS	SHEET NO.
F.A.I. 24	*	MASSAC	99	98
FED. ROAD DIST. NO. 7	ILLINOIS			

*(64-3B) I-6
CONTRACT NO. 98990

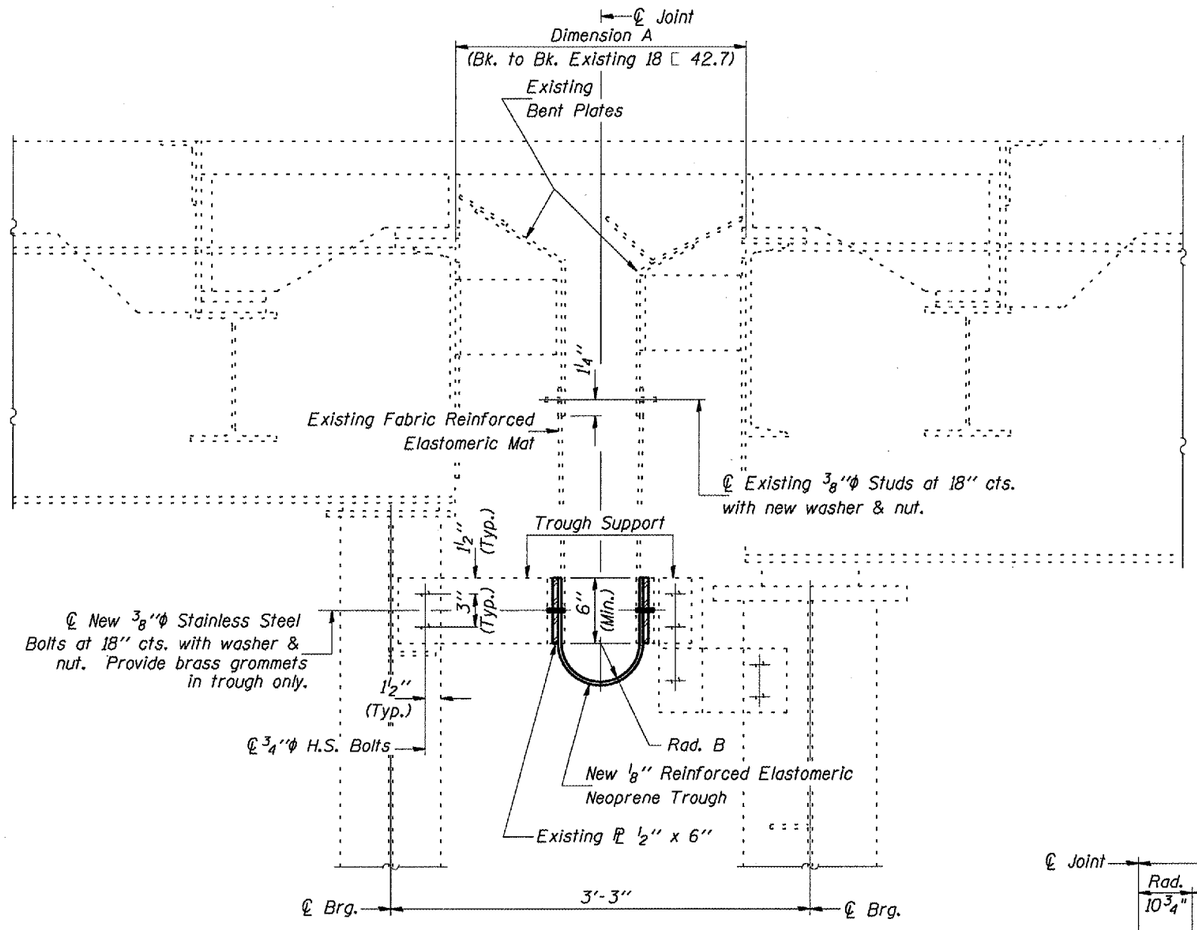

SECTION THRU JOINT

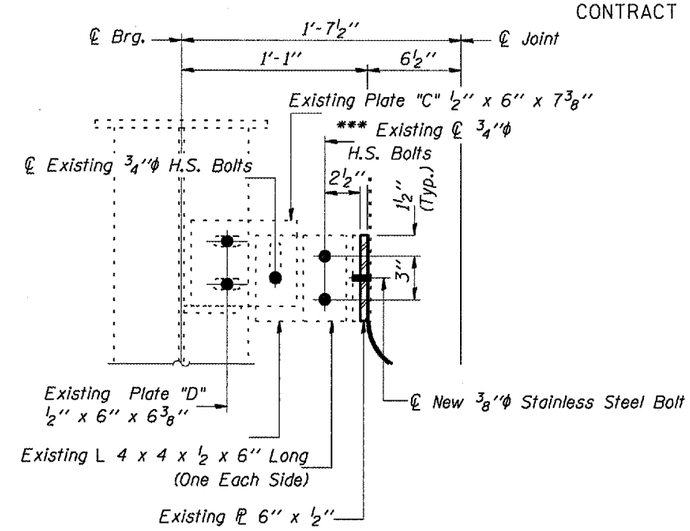

TYPE 3 CONNECTION
SPAN 8, LOCATION C *

* SEE LOCATION C (STRINGER C) ON SHEET 97 OF 99.

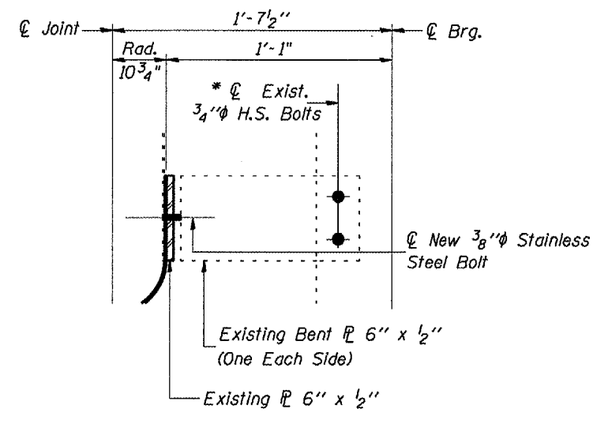

TYPE 1 CONNECTION
SPAN 9, LOCATION C *

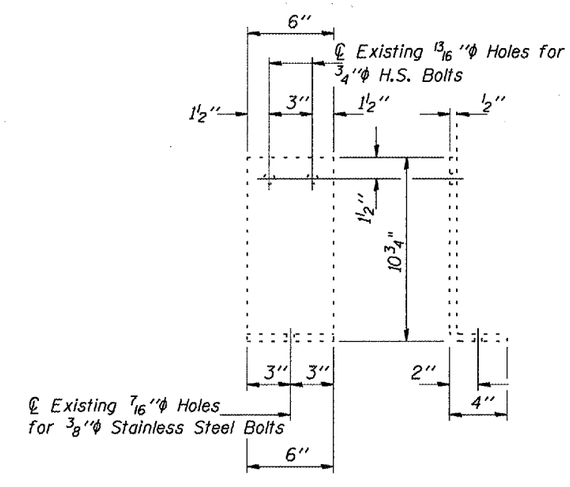

EXISTING BENT PLATE DETAIL
FOR INFORMATION ONLY

Notes:

A total of 54 new bolts are required: (22 x 2) in new trough, with washers, nuts, and brass grommets
4 in trough supports, with washers and nuts
6 in trough splice with washers, nuts, and grommets

The Contractor shall use care to avoid damage of the existing fabric reinforced elastomeric mat which overlaps the trough. If the mat is damaged, the Contractor shall replace the mat to the same specifications as the existing, at the direction of the Engineer.

TABLE OF DIMENSIONS

LOCATION	DIMENSION AT TEMPERATURE (F.)									
	20°		40°		60°		80°		100°	
	Dim. A	Rad. B	Dim. A	Rad. B	Dim. A	Rad. B	Dim. A	Rad. B	Dim. A	Rad. B
Pier #8	3'-2¾"	8⅞"	3'-0⅜"	7 11/16"	2'-10"	6½"	2'-7⅝"	5 5/16"	2'-5 5/16"	4⅛"