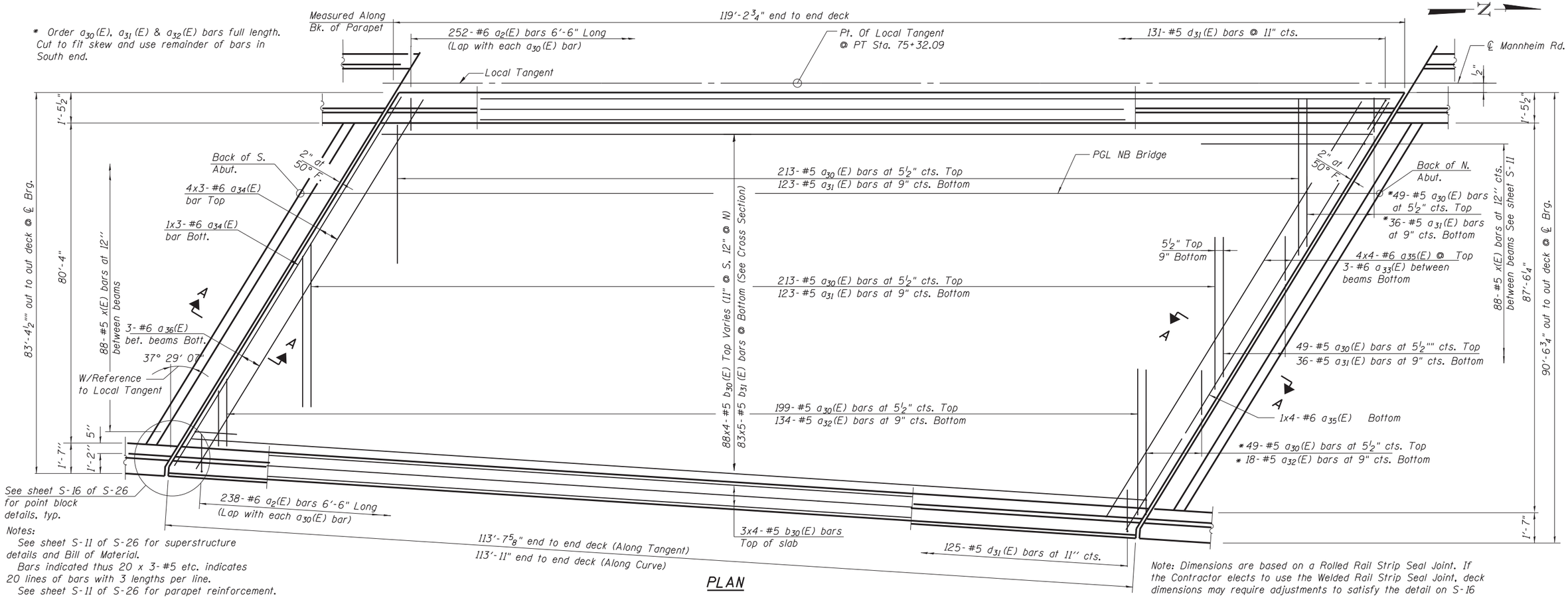

Notes:
See sheet S-11 of S-26 for superstructure details and Bill of Material.
Bars indicated thus 20 x 3-#5 etc. indicates 20 lines of bars with 3 lengths per line.
See sheet S-11 of S-26 for parapet reinforcement.

Note: Dimensions are based on a Rolled Rail Strip Seal Joint. If the Contractor elects to use the Welded Rail Strip Seal Joint, deck dimensions may require adjustments to satisfy the detail on S-16

PLAN

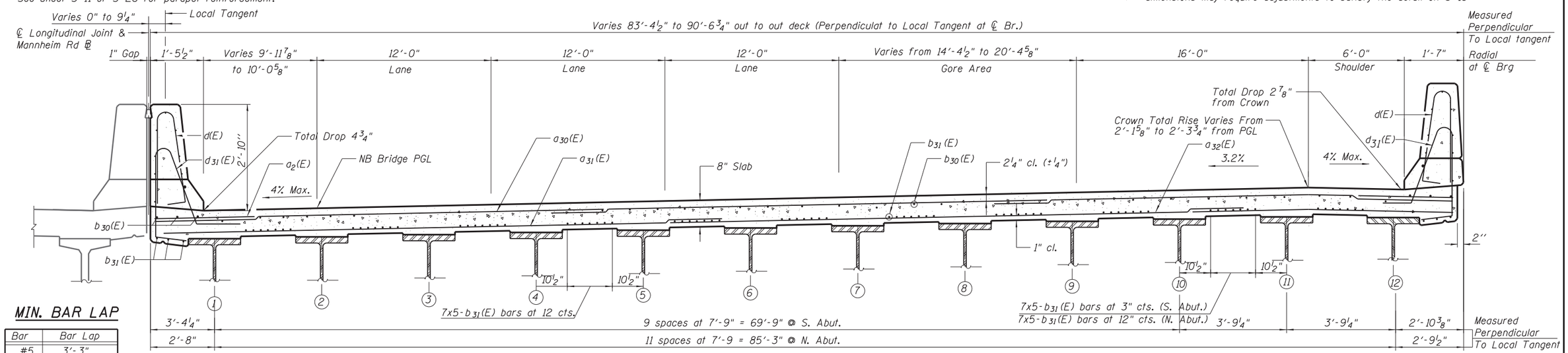

CROSS SECTION
(Looking North)

MIN. BAR LAP

Bar	Bar Lap
#5	3'-3"
#6	3'-10"

N:\ROSEMONT\11009\CADD_Sheets\0167943-01G0G37-B10-DECK.dgn

CHRISTOPHER B. BURKE ENGINEERING, LTD.
9575 W. Higgins Road, Suite 600
Rosemont, Illinois 60018
(847) 823-0500

USER NAME =	DESIGNED - MM	REVISED	
	CHECKED - JMB	REVISED	
PLOT SCALE =	DRAWN - PDR	REVISED	
PLOT DATE =	CHECKED - MM	REVISED	

STATE OF ILLINOIS
DEPARTMENT OF TRANSPORTATION

SUPERSTRUCTURE PLAN AND CROSS SECTION
NB MANNHEIM ROAD BRIDGE – STRUCTURE NO. 016–7943

SHEET NO. S-10 OF S-26 SHEETS

F.A. RTE.	SECTION	COUNTY	TOTAL SHEETS	SHEET NO.
330	0105 WRS&HB	COOK	605	346
		CONTRACT NO. 60G37		
		ILLINOIS FED. AID PROJECT		