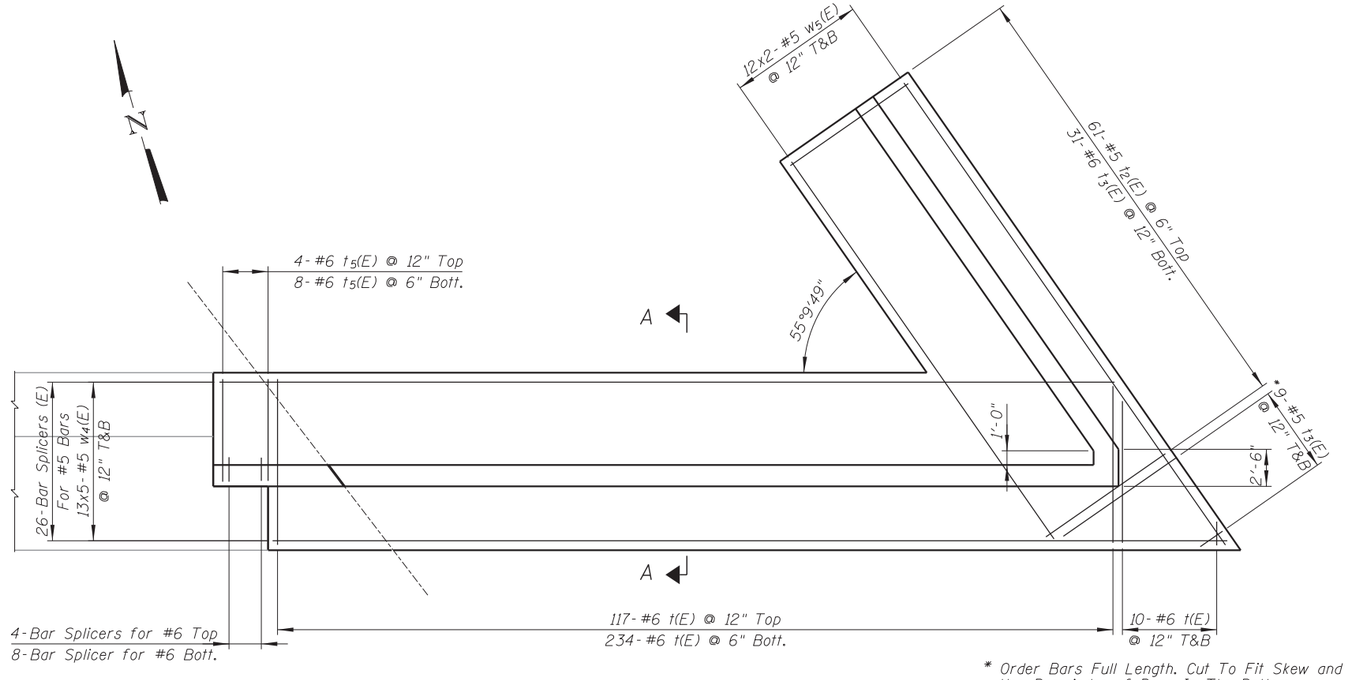

* Order Bars Full Length. Cut To Fit Skew and Use Remainder of Bars In The Bottom.

FOOTING PLAN

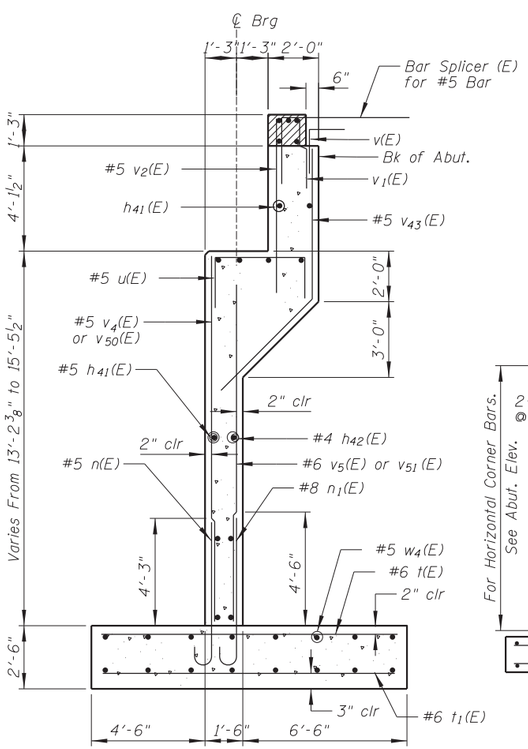

SECTION A-A

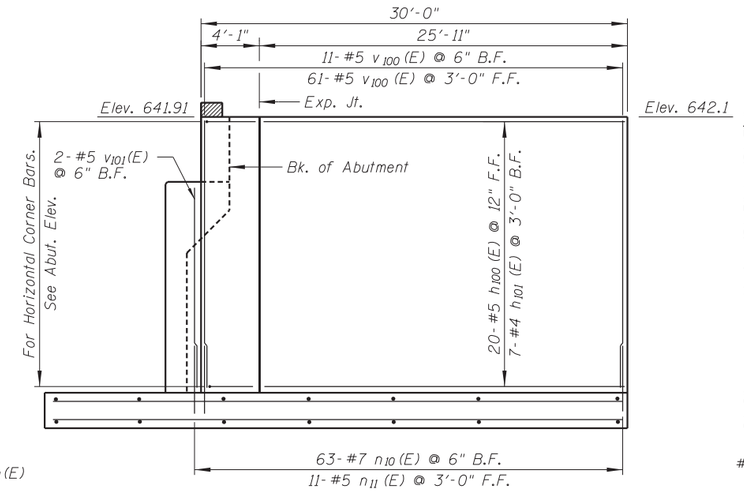

ELEVATION-WINGWALL

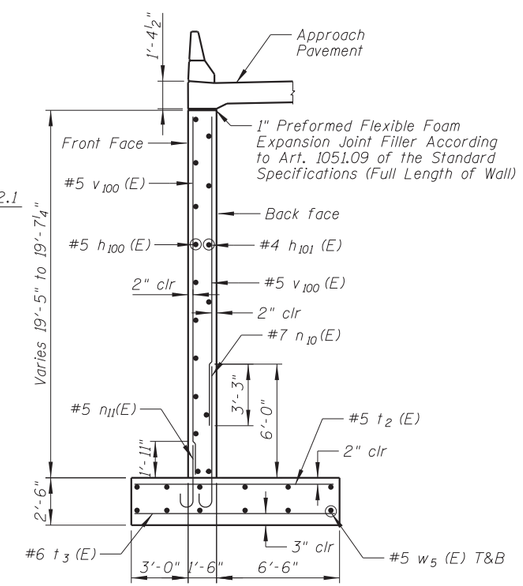

WINGWALL TYPICAL SECTION

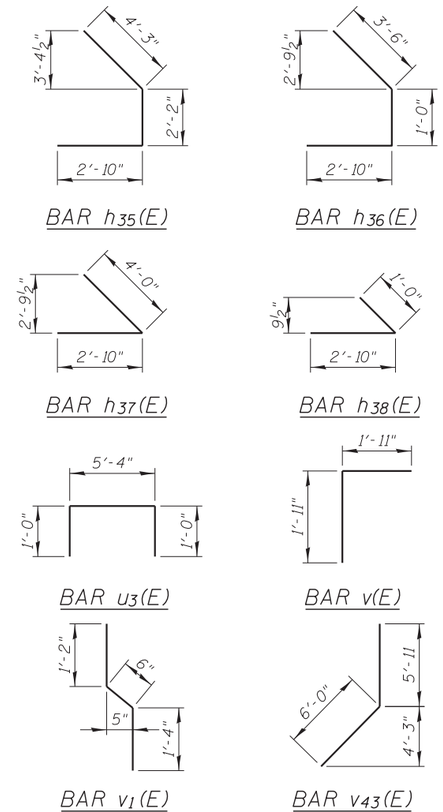

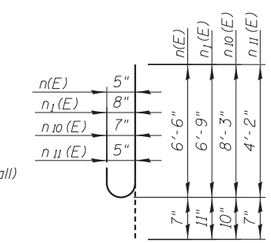

BARS n(E), n1(E), n10(E) & n11(E)

NORTH ABUTMENT BILL OF MATERIAL

Bar	No.	Size	Length	Shape
h_{35}(E)	16	#5	9'-3"	
h_{36}(E)	16	#5	7'-4"	
h_{37}(E)	5	#5	6'-10"	
h_{38}(E)	5	#5	3'-10"	
h_{40}(E)	20	#6	31'-6"	
h_{41}(E)	110	#5	29'-6"	
h_{42}(E)	20	#4	29'-6"	
h_{43}(E)	4	#5	19'-9"	
h_{44}(E)	2	#5	9'-5"	
h_{52}(E)	4	#5	21'-0"	
h_{53}(E)	2	#5	19'-3"	
h_{60}(E)	5	#6	7'-0"	
h_{61}(E)	10	#5	7'-0"	
h_{62}(E)	17	#5	8'-10"	
h_{63}(E)	5	#4	7'-8"	
h_{100}(E)	20	#5	25'-7"	
h_{101}(E)	7	#4	25'-7"	
n (E)	43	#5	7'-1"	
n_1 (E)	244	#8	7'-8"	
n_{10}(E)	63	#7	9'-1"	
n_{11}(E)	11	#5	4'-9"	
t (E)	361	#6	12'-2"	
t_2 (E)	61	#5	10'-8"	
t_3 (E)	40	#6	10'-8"	
t_5 (E)	12	#6	7'-10"	
u (E)	80	#5	6'-2"	
u_1 (E)	73	#5	3'-8"	
u_3 (E)	4	#5	7'-4"	
v (E)	122	#5	3'-10"	
v_1 (E)	122	#4	3'-0"	
v_2 (E)	123	#5	6'-2"	
v_{43}(E)	122	#5	11'-11"	
v_4 (E)	19	#5	14'-2"	
v_5 (E)	113	#6	14'-2"	
v_{50}(E)	23	#5	13'-0"	
v_{51}(E)	131	#6	13'-0"	
v_{100}(E)	72	#5	19'-0"	
v_{101}(E)	2	#5	15'-0"	
w_4 (E)	130	#5	27'-6"	
w_5 (E)	48	#5	20'-10"	
Concrete Superstructure			Cu. Yd.	9.5
Concrete Structures			Cu. Yd.	387.3
Reinforcement Bars, Epoxy Coated			Pound	36,490
Structure Excavation			Cu. Yd.	1,911
Concrete Sealer			Sq. Ft.	813
Removal and Disposal of Unsuitable Material for Structures			Cu. Yd.	404

NOTES:

1. Bars indicated thus 1x2 - #5 etc. indicates 1 line of bars with 2 lengths per line.
2. Space reinforcement in cap to miss anchor bolts.
3. Pour steps monolithically with cap.
4. Hatched area to be poured after supestructure false work has been removed. Quatity of concrete included in "Concrete Superstructure".
5. For Limits of Removal and Disposal of Unsuitable Material for Structures, See S-3 of S-26.

CHRISTOPHER B. BURKE ENGINEERING, LTD.
9575 W. Higgins Road, Suite 600
Rosemont, Illinois 60018
(847) 823-0500

USER NAME =	DESIGNED - MM	REVISED	
	CHECKED - JMB	REVISED	
PLOT SCALE =	DRAWN - PDR	REVISED	
PLOT DATE =	CHECKED - MM	REVISED	

STATE OF ILLINOIS
DEPARTMENT OF TRANSPORTATION

NORTH ABUTMENT – PLAN AND ELEVATION
NB MANNHEIM ROAD BRIDGE – STRUCTURE NO. 016–7943

SHEET NO.S-23 OF S-26 SHEETS

F.A. RTE.	SECTION	COUNTY	TOTAL SHEETS	SHEET NO.
330	0105 WRS&HB	COOK	605	359
		CONTRACT NO. 60G37		
		ILLINOIS FED. AID PROJECT		

N:\ROSEMONT\110095\CADD.Sheets\0167943-D160037-023.NAbutment.dgn