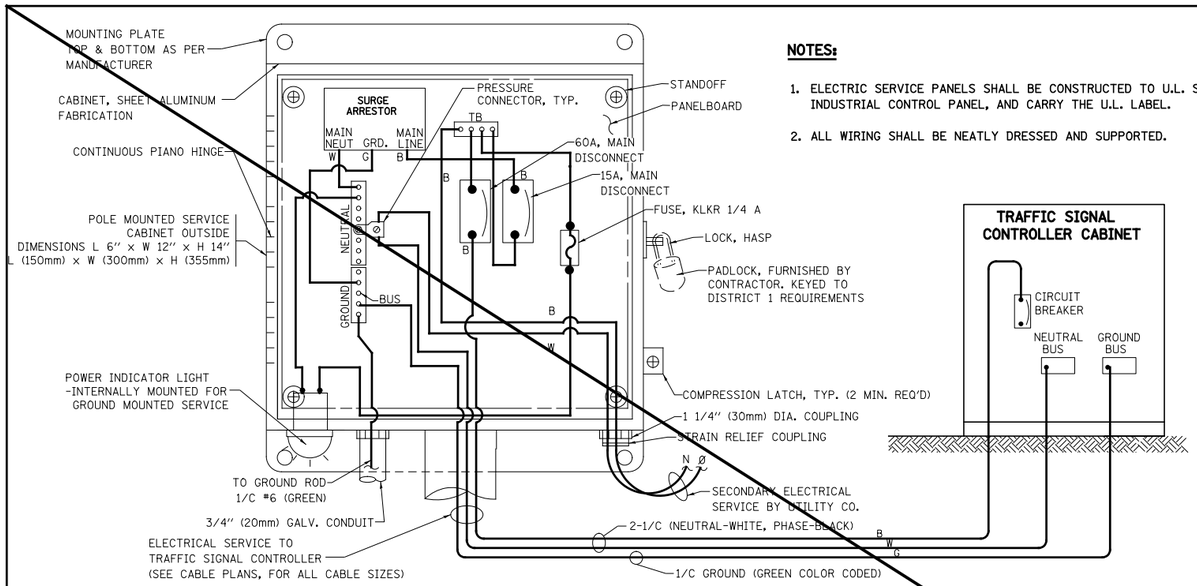

NOTES:

1. ELECTRIC SERVICE PANELS SHALL BE CONSTRUCTED TO U.L. STD 508, INDUSTRIAL CONTROL PANEL, AND CARRY THE U.L. LABEL.
2. ALL WIRING SHALL BE NEATLY DRESSED AND SUPPORTED.

ELECTRICAL SERVICE – PANEL DIAGRAM (TYPICAL FOR POLE AND GROUND MOUNTED SERVICE)

SERVICE INSTALLATION POLE MOUNT (SHOWN)

(NOT TO SCALE)

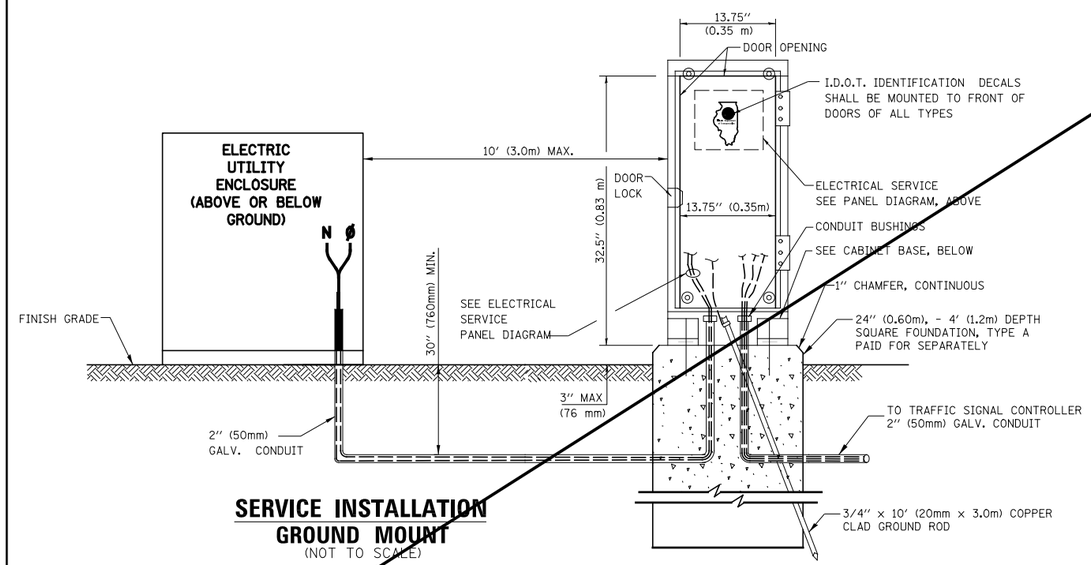

SERVICE INSTALLATION GROUND MOUNT

(NOT TO SCALE)

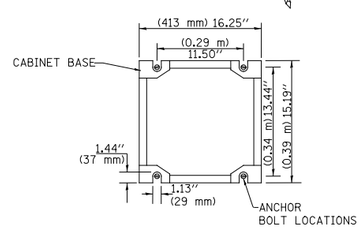

CABINET – BASE BOLT PATTERN

(NOT TO SCALE)

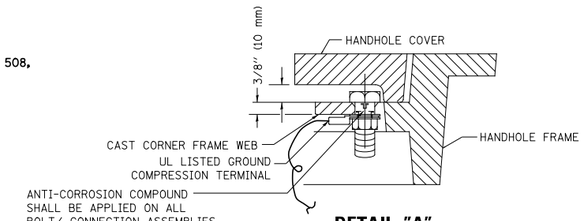

DETAIL "A"

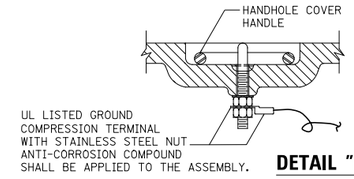

DETAIL "B"

NOTES:

GROUNDING SYSTEM

1. THE GROUNDING SYSTEM SHALL CONSIST OF AN INSULATED CONDUCTOR TYPE XLP, NO. 6 A.W.G., STRANDED COPPER TO BE INSTALLED IN RACEWAYS. THE GROUNDING CABLE SHALL BE INSTALLED IN A CONTINUOUS MANNER AS SHOWN ON THE CABLE PLAN PROVIDED. ALL GROUNDING CONDUCTORS SHALL BE BONDED TO METAL ENCLOSURE (HANDHOLE, POST, MAST ARM, CONTROLLER, ETC,). GROUND ROD SHALL BE 3/4" DIA. x 10'-0" (20mm x 3.0m) LONG, COPPER CLAD. ONE GROUND ROD SHALL BE INSTALLED AT ALL POST FOUNDATIONS, POLE FOUNDATIONS, CONTROLLER CABINET FOUNDATION AND ELECTRICAL SERVICE INSTALLATION AS INDICATED ON THE CABLE PLAN. IF THERE ARE ANY SPECIAL CONDITIONS SUCH AS SUB-SURFACE CONDITIONS OR INSTALLATION PROBLEMS, THE RESIDENT ENGINEER SHALL BE NOTIFIED OR CONTACT THE BUREAU OF TRAFFIC, ILLINOIS DEPARTMENT OF TRANSPORTATION DISTRICT ONE AT (847) 705-4139.
2. THE NEUTRAL CONDUCTOR AND THE GROUND CONDUCTOR SHALL BE CONNECTED IN THE SERVICE INSTALLATION. AT NO OTHER POINT IN THE TRAFFIC SIGNAL SYSTEM SHALL THE NEUTRAL AND GROUND CONDUCTORS BE CONNECTED.
3. ALL EQUIPMENT GROUNDING CONDUCTORS SHALL TERMINATE AT THE GROUND BUS IN THE CONTROLLER CABINET.
4. THE CONTRACTOR SHALL PROVIDE A GROUND CABLE WITH CONNECTORS BETWEEN THE HANDHOLE COVER AND HANDHOLE FRAME.

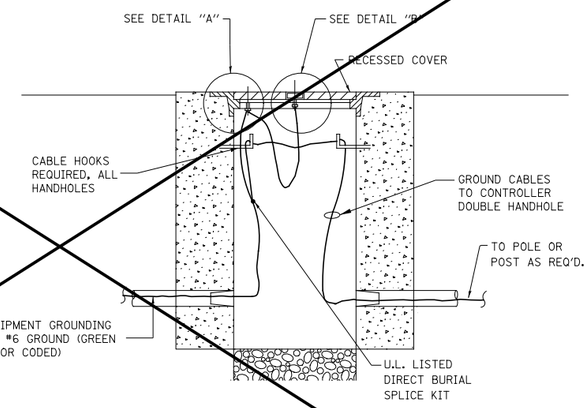

HANDHOLE COVER & FRAME – GROUNDING DETAIL

(NOT TO SCALE)

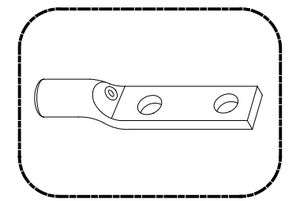

HEAVY-DUTY COMPRESSION TERMINAL (BURNDY TYPE YGHA OR APPROVED EQUAL)

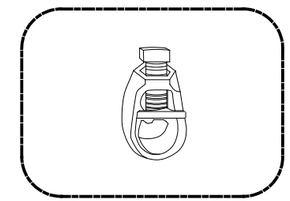

¾" (20mm) HEAVY-DUTY GROUND ROD CLAMP (BURNDY TYPE GRC OR APPROVED EQUAL)

NOTES:

- ALL CLAMPS SHALL BE BRONZE OR COPPER, UL APPROVED.
- GROUND CABLE SHALL BE LOOPED OVER HOOKS IN THE HANDHOLES 6.5' (2.0m) SLACK SHALL BE PROVIDED IN SINGLE HANDHOLES 13' (4.0m) OF SLACK SHALL BE PROVIDED IN DOUBLE HANDHOLES. 5' (1.4m) OF SLACK SHALL BE PROVIDED BETWEEN FRAME AND COVER.

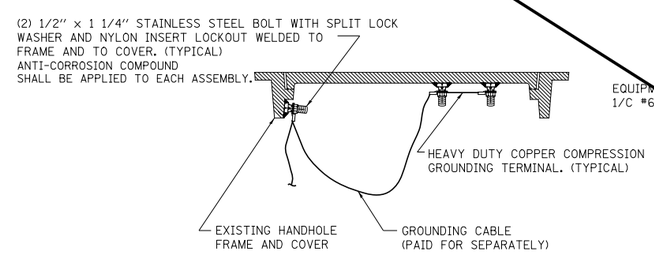

EXISTING HANDHOLE COVER & FRAME – GROUNDING DETAIL

(NOT TO SCALE)

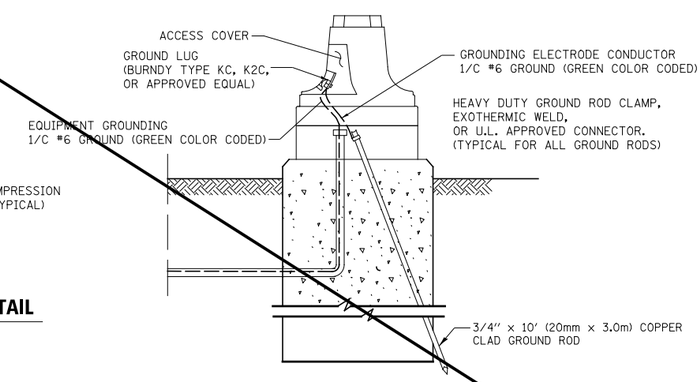

MAST ARM POLE / POST-GROUNDING DETAIL

(NOT TO SCALE)

SEE TRAFFIC SIGNAL PLANS SHEET TS-51

FILE NAME = $FILEL$	USER NAME = $USER$	DESIGNED - DAD	REVISED -	STATE OF ILLINOIS DEPARTMENT OF TRANSPORTATION	DISTRICT ONE STANDARD TRAFFIC SIGNAL DESIGN DETAILS	F.A. RTE.	SECTION	COUNTY	TOTAL SHEETS	SHEET NO.
		DRAWN - BCK	REVISED -			338	(112 & 113) WRS-5	DUPAGE	963	732
	PLOT SCALE = $SCALE$	CHECKED - DAD	REVISED -				TS-05	CONTRACT NO. 60I31		
	PLOT DATE = $DATE$	DATE - 10-28-09	REVISED -		SCALE: NONE SHEET NO. 3 OF 6 SHEETS STA. TO STA.	FED. ROAD DIST. NO. 1	ILLINOIS	FED. AID PROJECT		