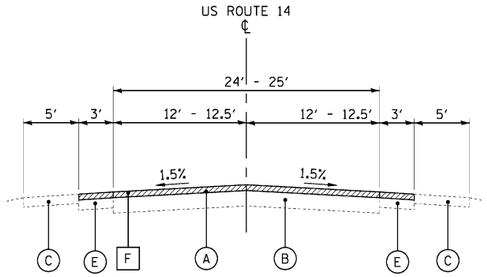

EXISTING TYPICAL SECTION
US ROUTE 14
STA 19+16 TO STA 219+86

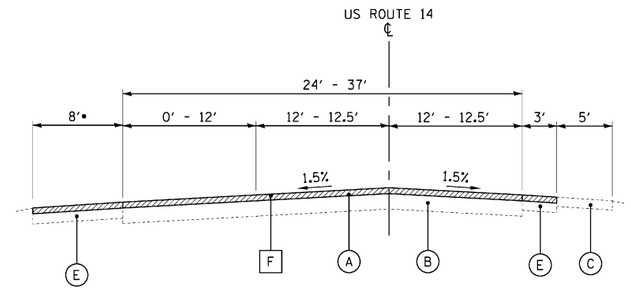

• 5′ PAVED SHOULDER AND 5′ AGGREGATE SHOULDER STA 220+90 TO STA 223+54

EXISTING TYPICAL SECTION
US ROUTE 14
STA 219+86 TO STA 227+69

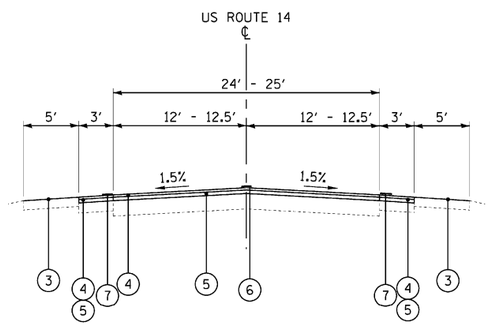

PROPOSED TYPICAL SECTION
US ROUTE 14
STA 19+16 TO STA 219+86

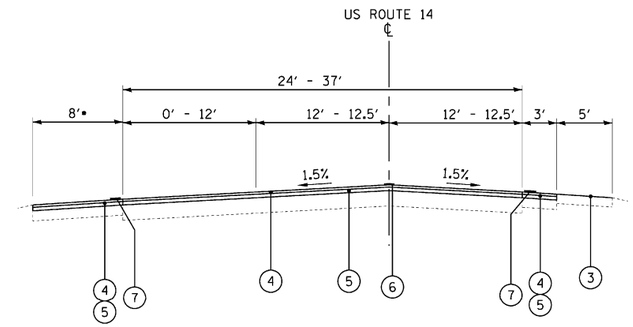

• 5′ PAVED SHOULDER AND 5′ AGGREGATE SHOULDER STA 220+90 TO STA 223+54

PROPOSED TYPICAL SECTION
US ROUTE 14
STA 219+86 TO STA 227+69

LEGEND

- (A) EXISTING HMA SURFACE, 3″±
- (AA) EXISTING HMA SURFACE, 6″±
- (B) EXISTING PCC BASE, 10″±
- (C) EXISTING AGGREGATE SHOULDER, 6″±
- [D] HOT-MIX ASPHALT SURFACE REMOVAL, 2 1/4″
- (E) EXISTING PAVED SHOULDERS
- [F] HOT-MIX ASPHALT SURFACE REMOVAL, 3″
- ITEM TO BE REMOVED
- (1) HOT-MIX ASPHALT SURFACE COURSE, MIX "D", N70 (IL-9.5mm) - 1 1/2″
- ** (2) POLYMERIZED LEVELING BINDER (MACHINE METHOD), IL-4.75, N50 - 3/4″
- (3) GRADING AND SHAPING SHOULDERS AND AGGREGATE WEDGE SHOULDER, TYPE B
- (4) HOT-MIX ASPHALT SURFACE COURSE, MIX "D", N70 (IL-9.5mm) - 2″
- ** (5) POLYMERIZED LEVELING BINDER (MACHINE METHOD), IL-4.75, N50 - 1″
- (6) CENTER LINE - RUMBLE STRIP - 16″
- (7) SHOULDER RUMBLE STRIPS, 8 INCH

NOTE:
** POLYMERIZED LEVELING BINDER WILL BE STOPPED 1 FOOT SHORT OF THE OUTSIDE EDGE OF SHOULDER (SEE DETAIL).

COPYRIGHT © 2012 BY BAXTER & WOODMAN, INC.
STATE OF ILLINOIS - PROFESSIONAL DESIGN FIRM
LICENSE NO. - 184-00121 - EXPIRES 4/30/2013
10/27/2012 10:09:59 AM ...\plotcfg\pdf-BW.Default.pltcfg
...\PLOTS\100153-W018-PEN.tbl
...\Comprojects\Projects\Crystal Lake\IL 31\100153-140-Design\W018 US 14 @23 to Bunker HIL\CADD-SURVEY\DRAWINGS\100153-W018-TYPSEC-1.sht

BAXTER & WOODMAN Consulting Engineers

DESIGNED - DSH	REVISED - 6-6-11 IDOT REVIEW		
DRAWN - KAR	REVISED - 8-17-12 IDOT REVIEW		
CHECKED - LDH	REVISED -		
DATE - 12-13-10	FILE - 100153-W018-TYPSEC-1.sht		

STATE OF ILLINOIS
DEPARTMENT OF TRANSPORTATION

US ROUTE 14
IL ROUTE 23 TO BUNKER HILL ROAD
TYPICAL SECTIONS

SCALE: NONE STA. TO STA.

F.A.P RTE.	SECTION	COUNTY	TOTAL SHEETS	SHEET NO.
305	29R-RS-4	McHENRY	25	5
C-91-298-11		CONTRACT NO. 60N28		
FED. ROAD DIST. NO. 1	ILLINOIS	FED AID PROJECT		