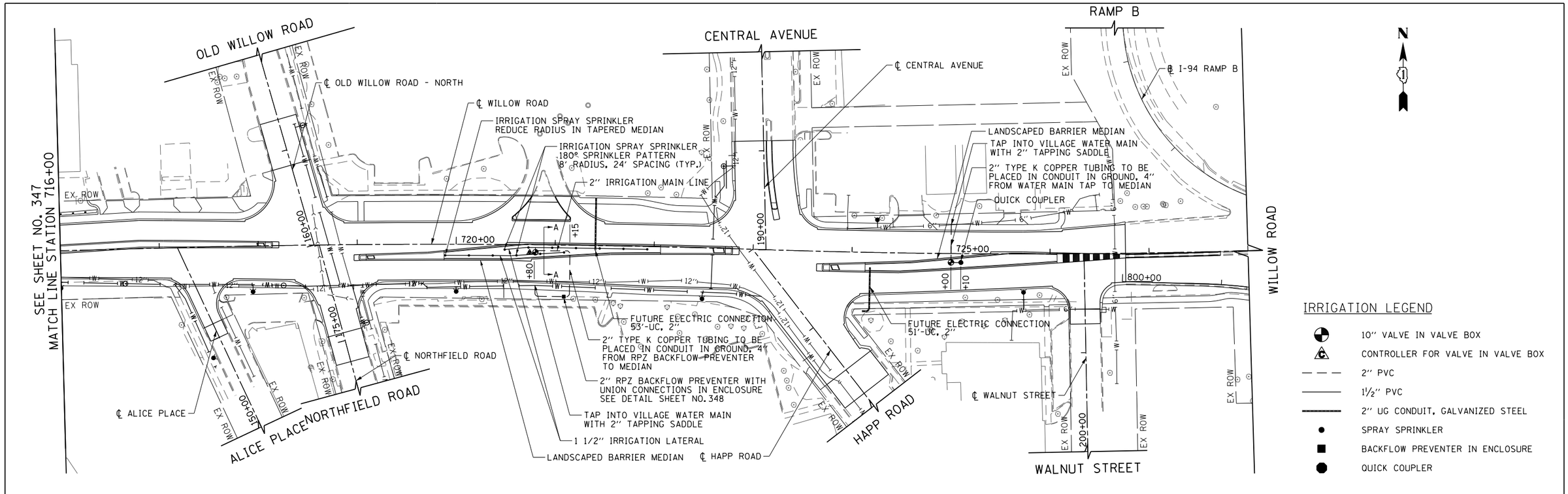

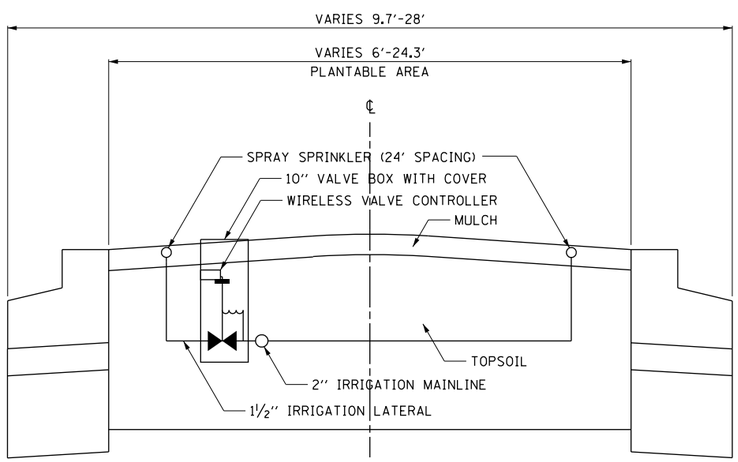

SECTION A-A
NOT TO SCALE

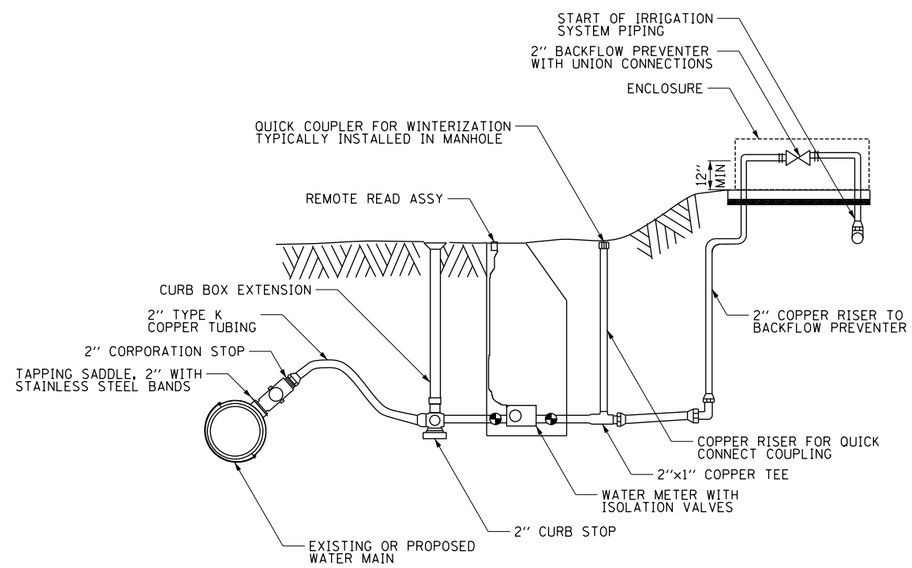

IRRIGATION WATER TAP
NOT TO SCALE

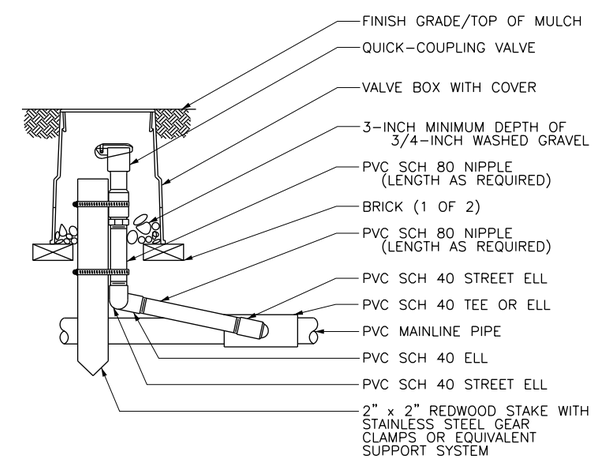

NOTE:

FURNISH FITTINGS AND PIPING NOMINALLY SIZED IDENTICAL TO NOMINAL QUICK COUPLING VALVE INLET SIZE.

QUICK COUPLER VALVE
NOT TO SCALE

FILE NAME = G:\CHI1\0158\Road\Sheets\D160T35-SHT-IRRIG-05.dgn	USER NAME = BAWistort	DESIGNED - JLV	REVISED -
	PLOT SCALE = 100.000 ' / in.	DRAWN - KAL	REVISED -
	PLOT DATE = 11/28/2012	CHECKED - RCB	REVISED -
		DATE - 10/31/2012	REVISED -

STATE OF ILLINOIS
DEPARTMENT OF TRANSPORTATION

WILLOW ROAD IRRIGATION PLAN

SCALE: 1" = 50' | SHEET NO. 348 OF 919 SHEETS | STA. 716+00 TO STA. 728+00

F.A.P. RTE.	SECTION	COUNTY	TOTAL SHEETS	SHEET NO.
305	(1920.01,1518,2022&1922.4B)R	COOK	919	348
		CONTRACT NO. 60T35		

FED. ROAD DIST. NO. 1 | ILLINOIS | FED. AID PROJECT