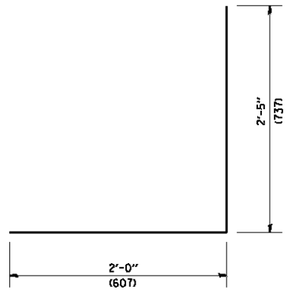

BAR d (E)

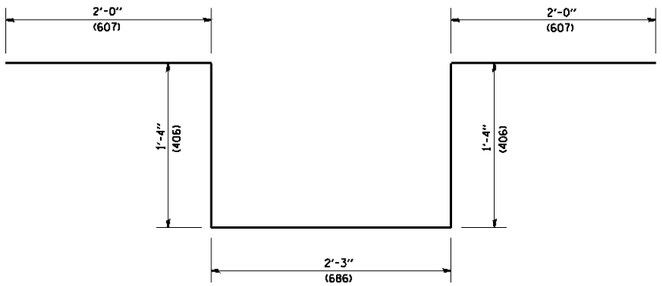

BAR d_1 (E)

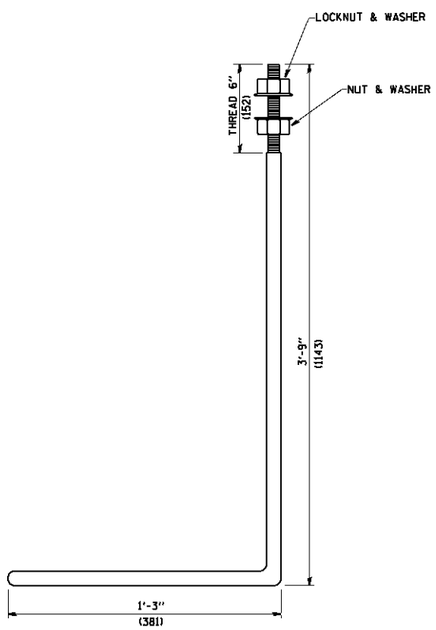

1" (25.4) dia. ANCHOR BOLT

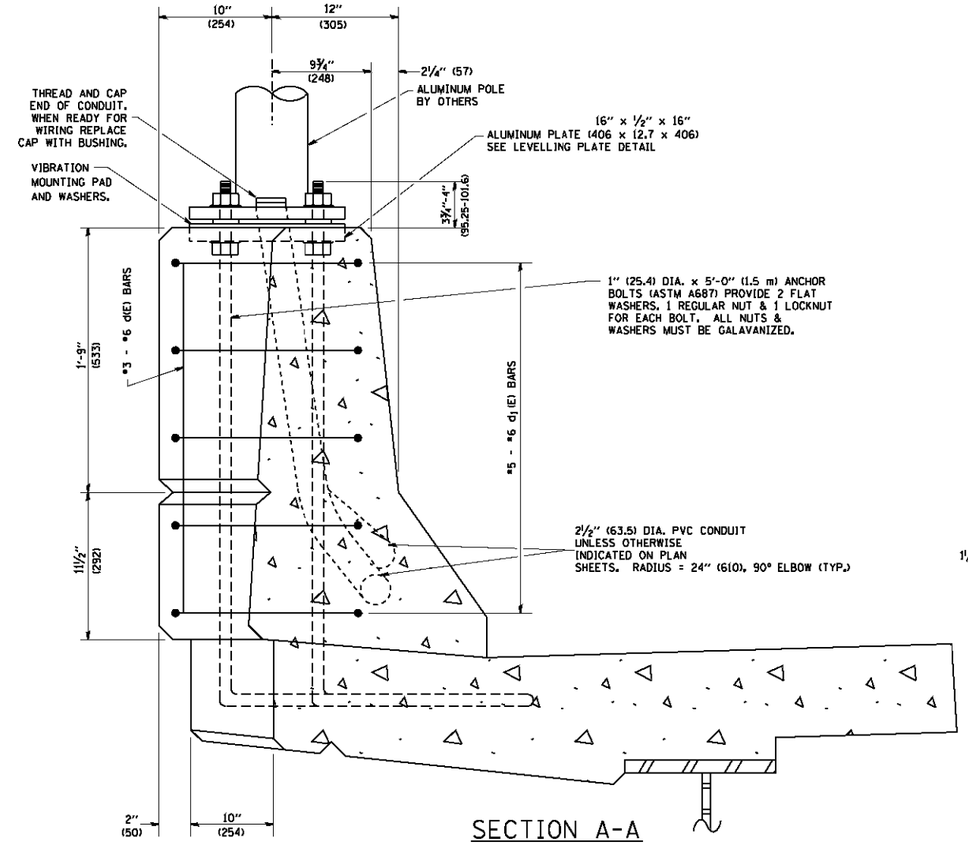

SECTION A-A

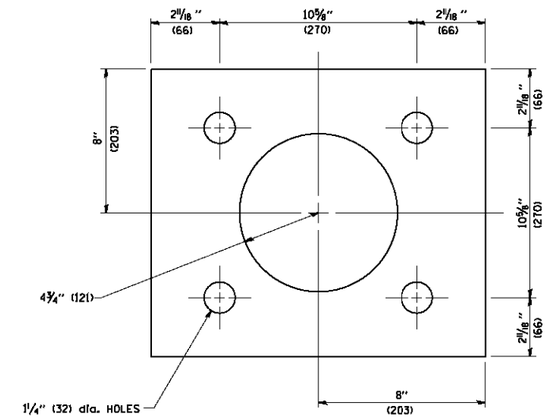

LEVELING PLATE DETAIL

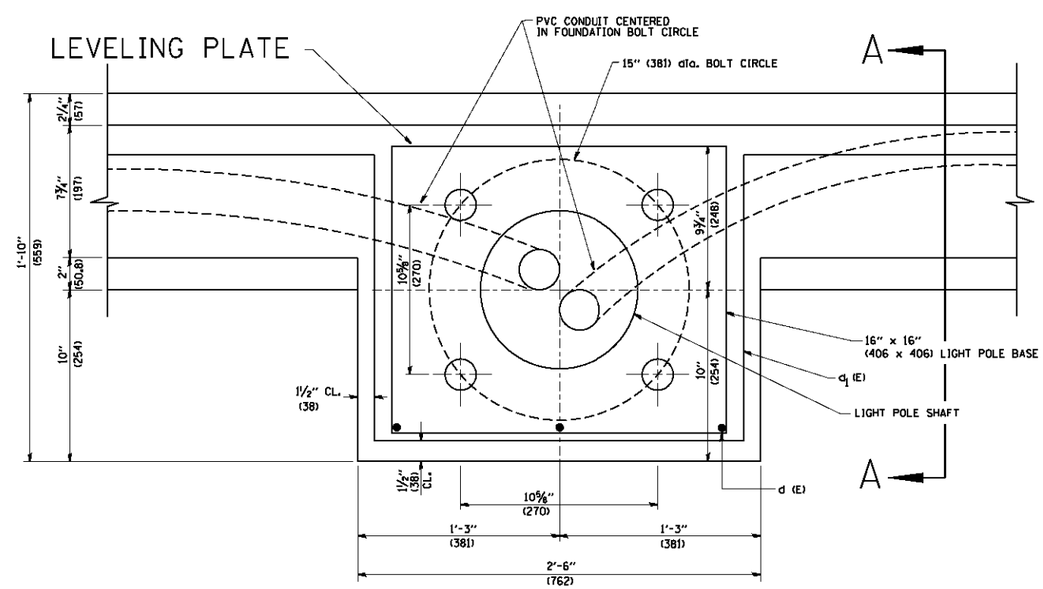

PLAN

NOTES

1. ALL DIMENSIONS ARE IN INCHES (MILLIMETERS) UNLESS OTHERWISE SHOWN.
2. LEVEL LIGHT POLE PLATES, USING THE FLANGE NUTS, PRIOR TO POURING THE PARAPET WALL. THE TOP OF THE PLATE SHALL BE AT THE SAME ELEVATION AS THE FINISHED CONCRETE PARAPET.
3. THE COST OF ANCHOR BOLTS, CONDUIT, LEVELLING PLATE AND FOUNDATION IS INCLUDED IN THE COST OF THE BRIDGE STRUCTURE.

FILE NAME = W:\distetd\22x34\be330.dgn	USER NAME = gagliarobt	DESIGNED -	REVISED - 04-22-02	STATE OF ILLINOIS DEPARTMENT OF TRANSPORTATION	LIGHT POLE MOUNTED ON CONCRETE PARAPET WALL 15" (381 mm) BOLT CIRCLE			F.A.P. RTE.	SECTION	COUNTY	TOTAL SHEETS / SHEET NO.
		DRAWN -	REVISED -					305	(1920,.01,1518,2022&1922.4B)R	COOK	919 / 532
	PLOT SCALE = 50.0000 ' / IN.	CHECKED -	REVISED -						BE-330	CONTRACT NO. 60T35	
	PLOT DATE = 1/4/2008	DATE -	REVISED -		SCALE: NONE	SHEET NO. 1 OF 1 SHEETS	STA. TO STA.		FED. ROAD DIST. NO. 1	ILLINOIS	FED. AID PROJECT