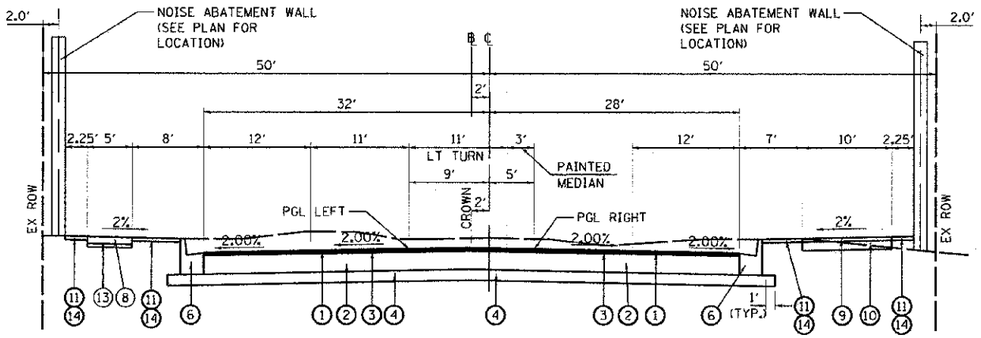

PROPOSED TYPICAL SECTION
95TH STREET
STA. 334+02.54 TO 336+66.37

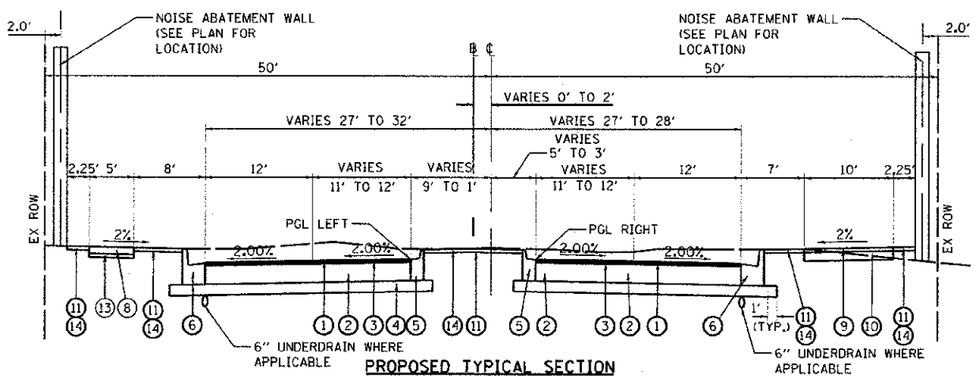

PROPOSED TYPICAL SECTION
95TH STREET
STA. 336+66.37 TO 346+25.00

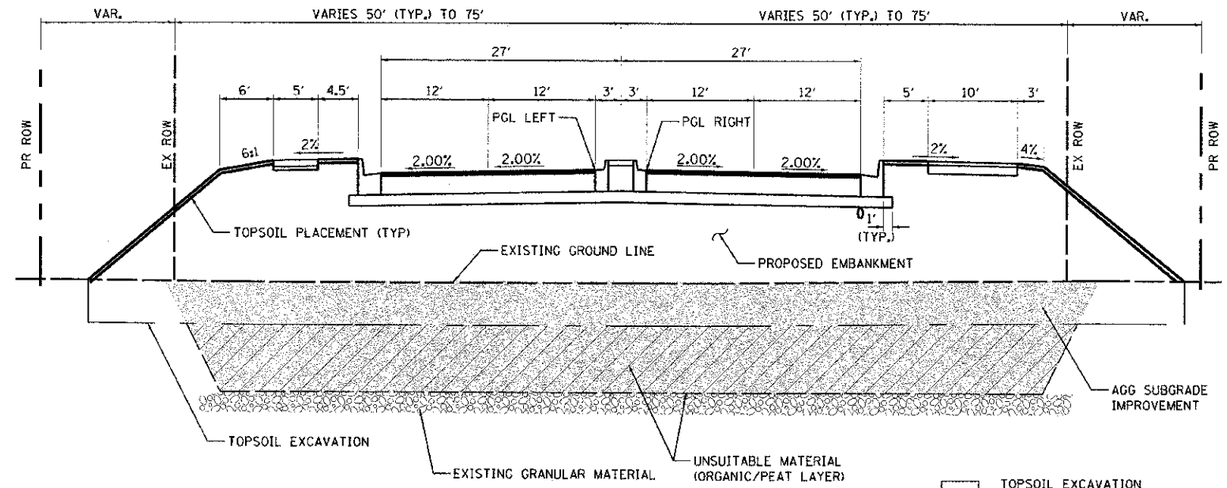

TOPSOIL EXCAVATION THICKNESS AS SHOWN ON TOPSOIL TABLE IN THE PLANS

AGGREGATE SUBGRADE IMPROVEMENT

REMOVAL AND DISPOSAL OF UNSUITABLE MATERIAL

TYPICAL UNDERCUT & EMBANKMENT DETAIL
95TH STREET
STA. 344+00.00 TO 360+50.00
SEE SOIL PROFILE FOR TYPICAL MATERIAL LAYERS

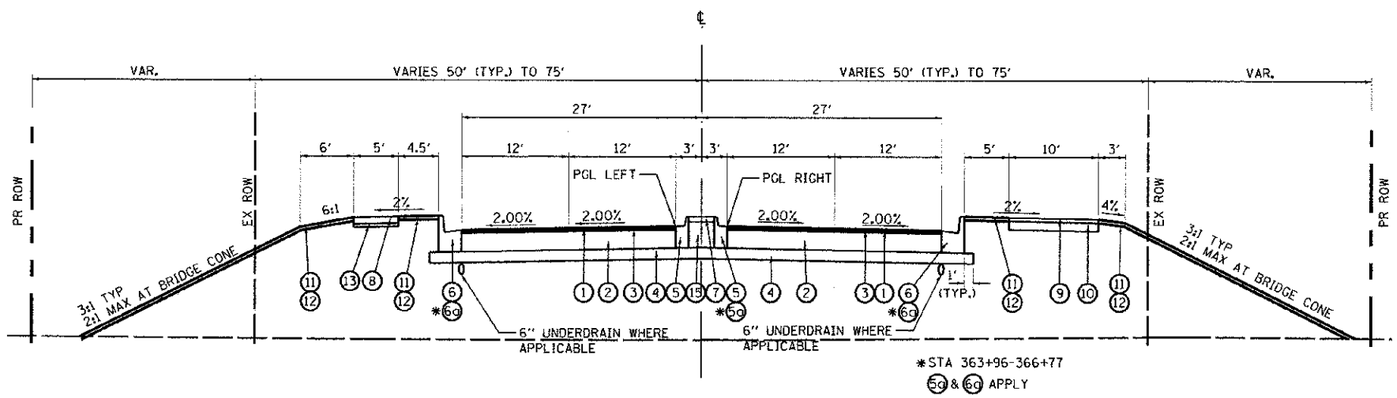

PROPOSED TYPICAL SECTION
95TH STREET
STA. 346+25.00 TO 360+23.66
(360+23.66 TO 363+96.34 BRIDGE)
STA. 363+96.34 TO 366+76.82

LEGEND

1. HOT-MIX ASPHALT SURFACE COURSE, MIX "D", N70 (2")
2. HOT-MIX ASPHALT BINDER COURSE, IL-19.0, N70 (10.5")
3. BITUMINOUS MATERIALS (PRIME COAT)
4. AGGREGATE SUBGRADE IMPROVEMENT 12"
5. COMBINATION CONCRETE CURB AND GUTTER, TYPE B-6.12 (MEDIAN C&G TO BE REVERSE PITCHED UNLESS OTHERWISE NOTED)
5G. COMBINATION CONCRETE CURB AND GUTTER, TYPE B-9.12 (MEDIAN C&G TO BE REVERSE PITCHED UNLESS OTHERWISE NOTED)
6. COMBINATION CONCRETE CURB AND GUTTER, TYPE B-6.24
6G. COMBINATION CONCRETE CURB AND GUTTER, TYPE B-9.24
7. CONCRETE MEDIAN SURFACE, 4 INCH
8. PORTLAND CEMENT CONCRETE SIDEWALK 5 INCH
9. HOT-MIX ASPHALT SURFACE COURSE, MIX "D", N50 (3")
10. AGGREGATE BASE COURSE, TYPE B 6"
11. TOPSOIL EXCAVATION AND PLACEMENT (4" OR AS NOTED)
12. SEEDING, CLASS 2A
13. AGGREGATE BASE COURSE, TYPE B 4"
14. SODDING, SALT TOLERANT
15. AGGREGATE BASE COURSE, TYPE B
16. STRIP REFLECTIVE CRACK CONTROL TREATMENT
17. HMA SURFACE REMOVAL, 1¾"

URS
100 S.WACKER DR.
SUITE 500
CHICAGO IL 60606
TEL (312)-939-1000
FAX (312)-939-4198

USER NAME = jamesjpan	DESIGNED - JRP	REVISED
	DRAWN - MRF	REVISED -
PLOT SCALE = 20.0000 ' / IN.	CHECKED - JRP	REVISED -
PLOT DATE = 10/15/2012	DATE - 10/19/2012	REVISED -

STATE OF ILLINOIS
DEPARTMENT OF TRANSPORTATION

95TH STREET
PROPOSED TYPICAL SECTIONS

SCALE: NTS | DRAWING NO. 5 OF 7 | STA. | TO STA.

F.A.U. RTE.	SECTION	COUNTY	TOTAL SHEETS	SHEET NO.
1644	01-00181-00-FP	WILL	328	15

CONTRACT NO. 63647
ILLINOIS FED. AID PROJECT

FILE NAME = q:\wcad\-2536738\-096\hd\dwings\bpart\ec05-mod01\mainline\typicalsecs\Sht-Typ06ec-003.dgn