NOTES:

1. FOUNDATION MUST BE INSTALLED PRIOR TO TRENCHING AND WITHOUT PILOT HOLE.
2. FOUNDATION MUST BE INSTALLED WITH BASEPLATE LEVEL.
3. ANY DEVIATION FROM ABOVE INSTALLATION PROCEDURES MUST BE APPROVED BY ENGINEER.

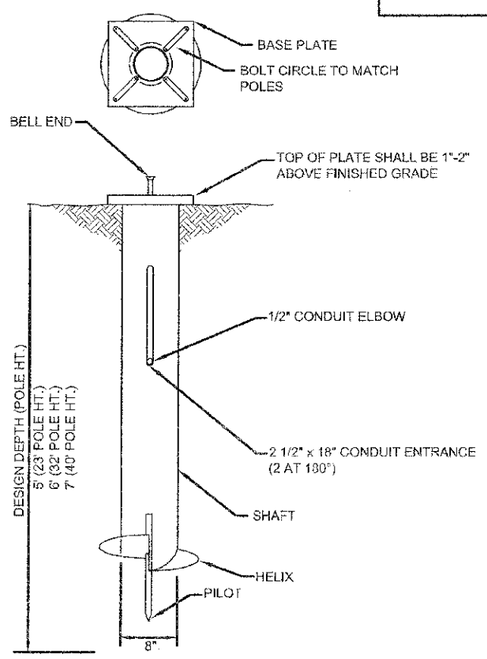

FOUNDATION

SHAFT:	ASTM A53 SCHEDULE 4 Ø, GRADE B, ASTM A500 OR ASTM A252, GRADE 2.
BASE PLATE:	ASTM A36
HELIX:	ASTM A28
PILOT:	ASTM 575

GALVANIZED FOUNDATION PER ASTM A153 AFTER FABRICATION.

HARDWARE

CARRIAGE BOLTS:	SAE J429 GRADE 5 GALVANIZED A153 CLASS C
HEAVY HEX NUTS:	ASTM A563 GRADE D OR DH GALVANIZED A153
WASHERS:	ASTM F436 GALVANIZED A 153

City of Naperville
STANDARD DETAIL

HELIX TYPE POLE FOUNDATION DETAIL

EFFECTIVE: 2/29/2008 | SHEET 1 OF 1

LIGHTING 7

690.07

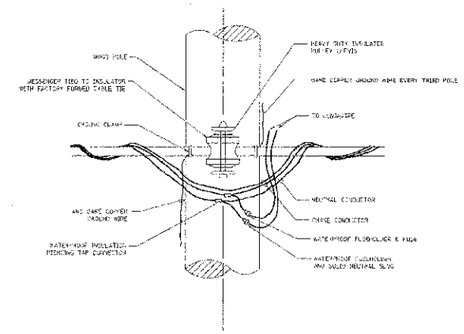

TEMPORARY LIGHT POLE ATTACHMENT DETAIL

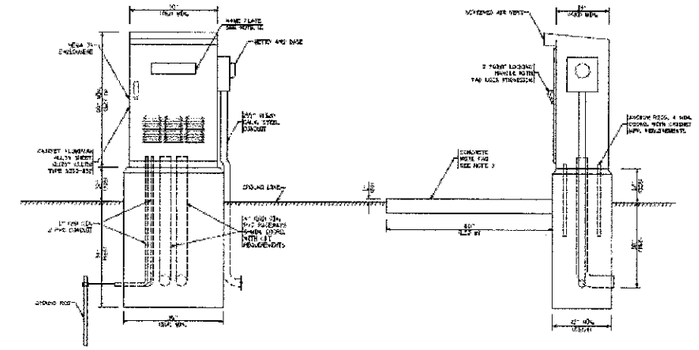

VILLAGE OF BOLINGBROOK LIGHTING CONTROLLER FOUNDATION DETAILS

N.T.S.

N.T.S.

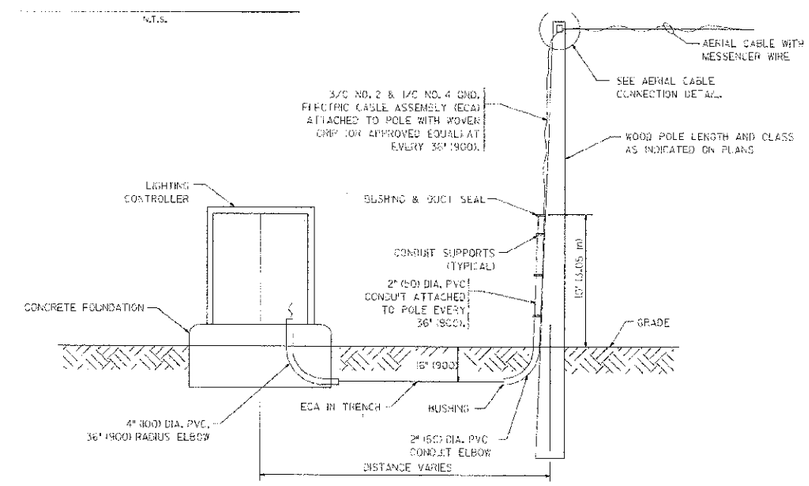

WOOD POLE TO LIGHTING CONTROLLER WIRING CONNECTION DETAIL

N.T.S.

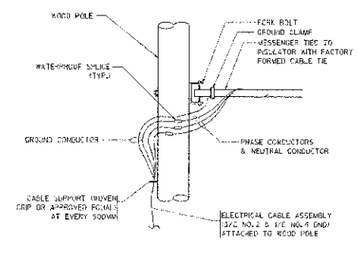

AERIAL CABLE CONNECTION DETAIL

N.T.S.

NOTES:

1. CITY OF NAPERVILLE STANDARD DETAILS APPLY ONLY TO ELECTRICAL AND LIGHTING WORK MAINTAINED BY THE CITY OF NAPERVILLE. ALL OTHER DETAILS APPLY TO LIGHTING WORK MAINTAINED BY THE VILLAGE OF BOLINGBROOK.
2. LIGHTING CONTROLLER FOUNDATION SHALL CONFORM TO SECTION 825 OF THE IDOT STANDARD SPECIFICATIONS. THE CONTRACTOR SHALL CONFIRM IN THE FIELD THE SIZE AND CONDUIT LAYOUT OF THE EXISTING LIGHTING CABINET FOUNDATION BEFORE PROCEEDING WITH THE CONSTRUCTION OF THE NEW FOUNDATION.
3. THE CONTRACTOR SHALL FURNISH AND INSTALL GROUND RODS IN THE CONTROLLER FOUNDATIONS AS SHOWN. THE COST OF ALL GROUNDING EQUIPMENT, MATERIALS, AND LABOR SHALL BE INCLUDED AS PART OF THE COST OF THE EQUIPMENT BEING GROUNDED.

URS
100 S.WACKER DR., SUITE 500
CHICAGO IL 60606
TEL (312)-939-1000
FAX (312)-939-4198

USER NAME = jamesp.pc	DESIGNED - MAE	REVISED -
	DRAWN - MAE	REVISED -
PLOT SCALE = 50.0000 ' / IN.	CHECKED - DAD	REVISED -
PLOT DATE = 8/16/2012	DATE - 2/1/2012	REVISED -

STATE OF ILLINOIS
DEPARTMENT OF TRANSPORTATION

95TH STREET
LIGHTING STANDARDS & DETAILS

SCALE: NONE | DRAWING NO. 27 OF 30 | STA. | TO STA.

F.A.U. RTE.	SECTION	COUNTY	TOTAL SHEETS	SHEET NO.
1644	01-00181-00-FP	WILL	328	155

CONTRACT NO. 63647

ILLINOIS FED. AID PROJECT

FILE NAME = g:\sedah\25367701 95th\drawings\contract snath\working\signing\sheet_signs627 Naperville Traffic design