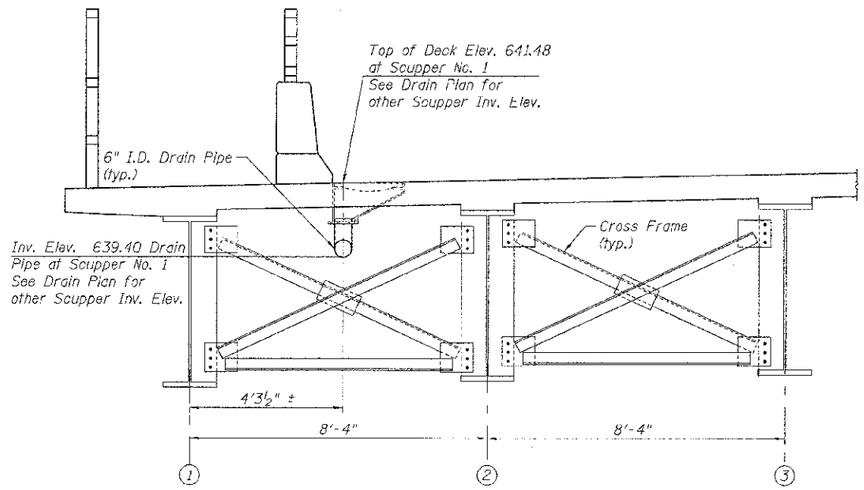

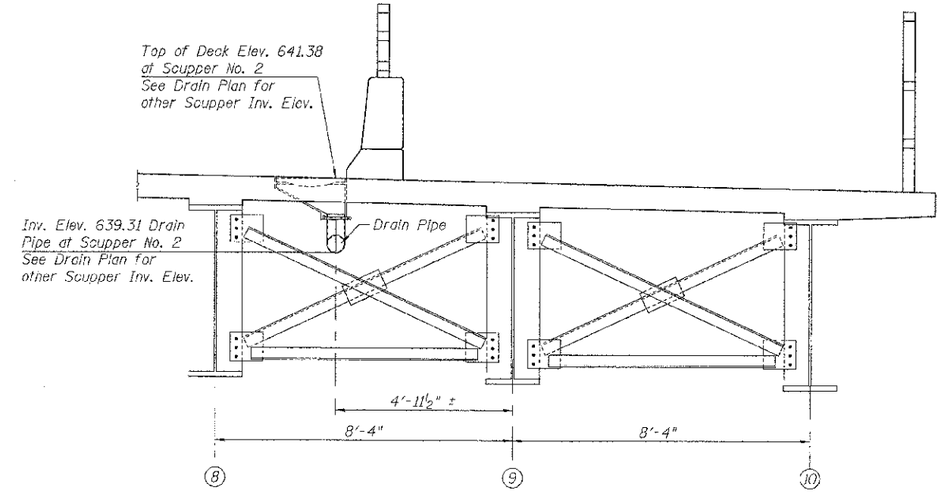

TYPICAL CROSS SECTION AT CROSS FRAMES
(Looking Southeast)

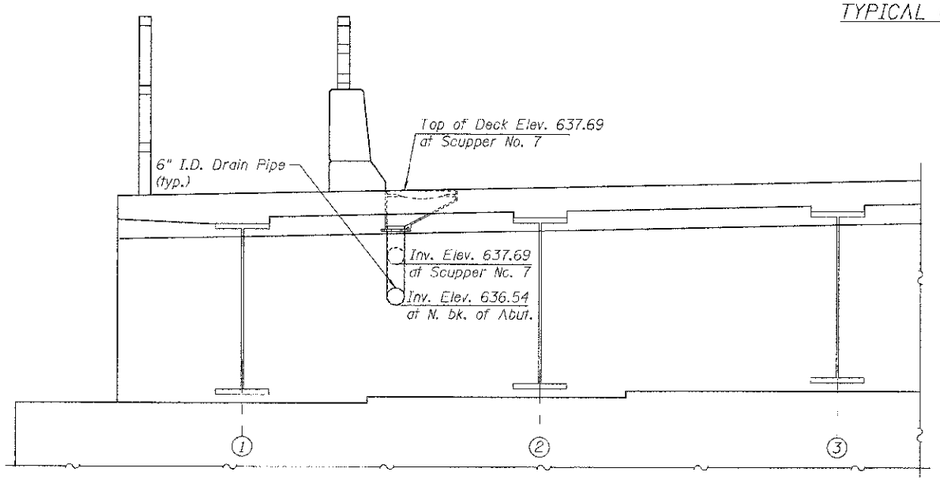

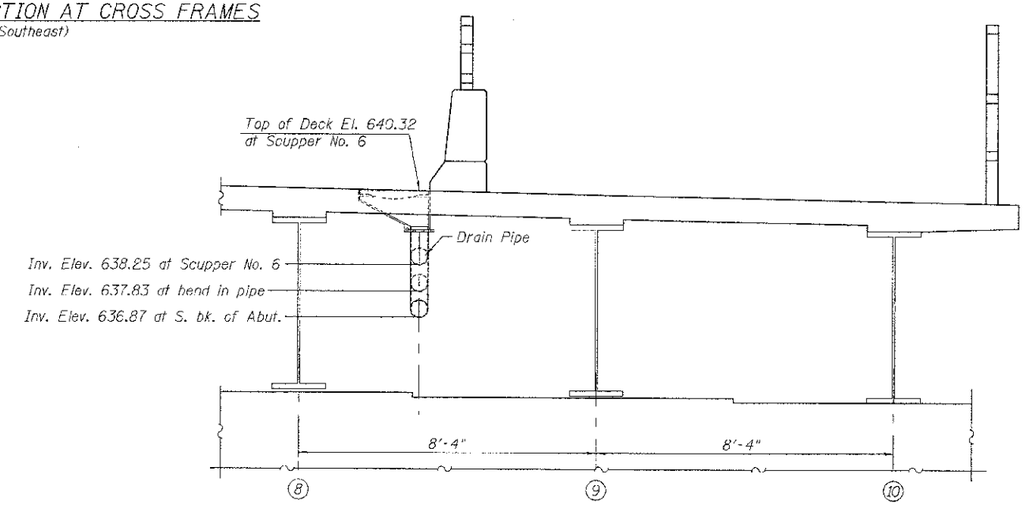

TYPICAL CROSS SECTION AT E. ABUTMENT
(Looking Southeast)

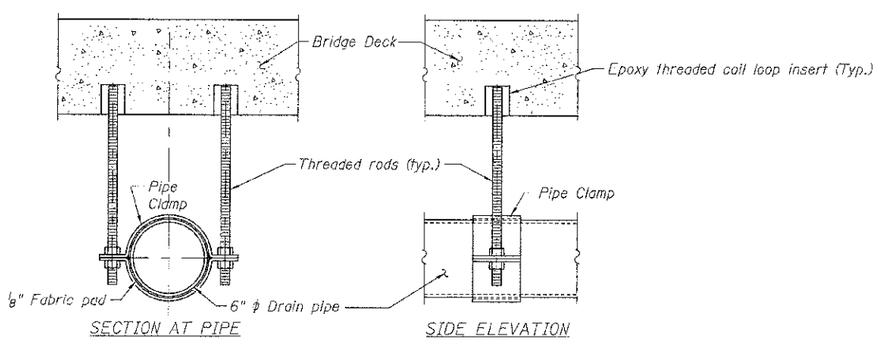

SECTION AT PIPE

SIDE ELEVATION

PIPE HANGER SUPPORT DETAIL

Notes:
The maximum spacing of hangers and supports for the Bridge Drainage system shall be 5'-0".

For Sections and more Details see Bridge Deck Drainage Plan & Details

The cost of fiberglass reinforced pipe with all supports, coil loop inserts, fittings, connections and clean-outs shall be included with "Bridge Drainage System".

Provide steel pipe sleeve for 6" dia. pipe at abutment and seal the space between pipe and sleeve with grout.

See roadway plans for drainage structures 204A and 204B.

Provide expansion collar on fiberglass reinforced pipe for thermal movement between bridge pipe and pipe extending beyond abutment.

FILE NAME = q:\wcdoh_26367381_95th\drawings\contract south\Structures\Bridge (OxPage)\Control Copy\S-30 Bridge Drainage Sections & Details.dgn

URS 100 S.WACKER DR., SUITE 500 CHICAGO IL 60606 TEL (312)-939-1000 FAX (312)-939-4198	USER NAME = $STB#	DESIGNED - STB	REVISED -	STATE OF ILLINOIS DEPARTMENT OF TRANSPORTATION	BRIDGE DECK DRAINAGE SECTIONS AND DETAILS STRUCTURE NO. 099-3035
		CHECKED - NPP	REVISED		
	PLOT SCALE = 2:0 ' / IN.	DRAWN - SOI	REVISED -		
	PLOT DATE = 10/16/2012	CHECKED - NPP	REVISED -		SHEET NO. 30 OF 38 SHEETS

F.A.U. RTE.	SECTION	COUNTY	TOTAL SHEETS	SHEET NO.
1644	01-00181-00-FP	WILL	328	188
		CONTRACT NO. 63647		
		ILLINOIS FED. AID PROJECT		