CONTRACT NO. 66420

F.A.P. RTE.	SECTION	COUNTY	TOTAL SHEETS	SHEET NO.
311	(1-1)R	KENDALL	514	249
STA. 801+00		TO STA. 816+00		
FED. ROAD DIST. NO.	ILLINOIS	FED. AID PROJECT		

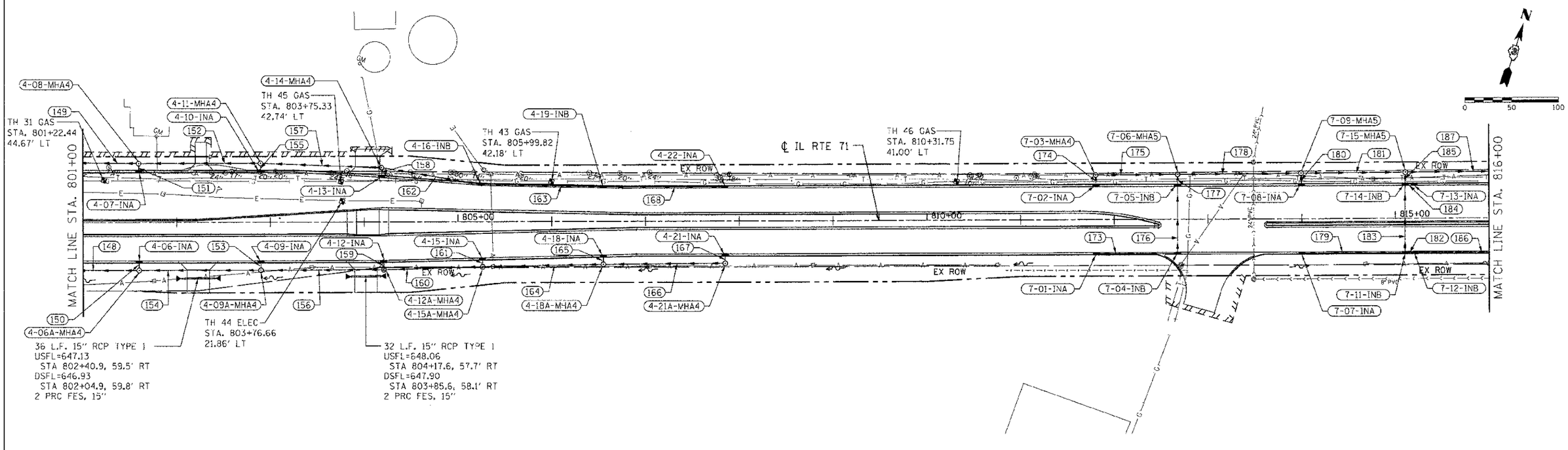

DRAINAGE STRUCTURE SCHEDULE

STRUCTURE NUMBER	STATION	OFFSET	ROUTE	STRUCTURE TYPE	CASTING	RIM ELEVATION	NORTH INVERT	SOUTH INVERT	EAST INVERT	WEST INVERT	COMMENTS
4-06-IN A	801+59.58	41.00' RT.		INLET, TYPE A	TYPE 24 FRAME AND GRATE	649.73		646.23			
4-06A MH A	801+59.84	51.00' RT		MANHOLE, TYPE A, 4' DIAMETER	TYPE 1 FRAME, CLOSED LID	649.50	646.13		645.44	645.34	
4-07-IN A	801+59.59	53.00' LT.		INLET, TYPE A	TYPE 24 FRAME AND GRATE	649.43	645.93				
4-08-MH A	801+59.60	62.56' LT.		MANHOLE, TYPE A, 4' DIAMETER	TYPE 1 FRAME, CLOSED LID	650.24		645.83	644.99	644.79	
4-09-IN A	802+89.54	41.00' RT.		INLET, TYPE A	TYPE 24 FRAME AND GRATE	650.25		646.75			
4-09A MH A	802+89.73	51.00' RT		MANHOLE, TYPE A, 4' DIAMETER	TYPE 1 FRAME, CLOSED LID	649.55	646.65		646.05	645.95	
4-10-IN A	802+89.54	53.00' LT.		INLET, TYPE A	TYPE 24 FRAME AND GRATE	649.95	646.45				
4-11-MH A	802+89.54	62.69' LT.		MANHOLE, TYPE A, 4' DIAMETER	TYPE 1 FRAME, CLOSED LID	650.21		646.35	645.62	645.52	
4-12-IN A	804+20.53	41.00' RT.		INLET, TYPE A	TYPE 24 FRAME AND GRATE	650.79		647.29			
4-12A- MH A	804+20.92	50.99' RT		MANHOLE, TYPE A, 4' DIAMETER	TYPE 1 FRAME, CLOSED LID	650.30	647.19		646.66	646.56	
4-13-IN A	804+18.90	47.09' LT.		INLET, TYPE A	TYPE 24 FRAME AND GRATE	650.50	647.00				
4-14-MH A	804+18.86	57.67' LT.		MANHOLE, TYPE A, 4' DIAMETER	TYPE 1 FRAME, CLOSED LID	650.26		646.90	646.35	646.25	
4-15-IN A	805+26.18	38.65' RT.		INLET, TYPE A	TYPE 24 FRAME AND GRATE	651.21		647.71			
4-15A-MH A	805+26.16	48.08' RT		MANHOLE, TYPE A, 4' DIAMETER	TYPE 1 FRAME, CLOSED LID	650.51	647.61		647.17	647.07	
4-16-IN B	805+24.75	38.39' LT.		INLET, TYPE B	TYPE 24 FRAME AND GRATE	651.21			646.97	646.87	
4-18-IN A	806+54.65	35.79' RT.		INLET, TYPE A	TYPE 24 FRAME AND GRATE	651.74		648.24			
4-18A-MH A	806+54.91	45.79' RT		MANHOLE, TYPE A, 4' DIAMETER	TYPE 1 FRAME, CLOSED LID	651.04	648.14		647.77	647.67	
4-19-IN B	806+54.76	35.46' LT.		INLET, TYPE B	TYPE 24 FRAME AND GRATE	651.75			647.71	647.61	
4-21-IN A	807+84.77	35.00' RT.		INLET, TYPE A	TYPE 24 FRAME AND GRATE	652.27		648.77			
4-21A-MH A	807+84.88	45.00' RT		MANHOLE, TYPE A, 4' DIAMETER	TYPE 1 FRAME, CLOSED LID	651.57	648.67			648.41	
4-22-IN A	807+84.77	35.00' LT.		INLET, TYPE A	TYPE 24 FRAME AND GRATE	652.27				648.35	
7-01-IN A	811+80.54	35.00' RT.		INLET, TYPE A	TYPE 24 FRAME AND GRATE	652.34			648.94		
7-02-IN A	811+80.51	35.00' LT.		INLET, TYPE A	TYPE 24 FRAME AND GRATE	652.34	648.54				
7-03-MH A	811+80.51	47.30' LT.		MANHOLE, TYPE A, 4' DIAMETER	TYPE 1 FRAME, CLOSED LID	653.40		648.44	648.03		
7-04-IN B	812+67.44	35.00' RT		INLET, TYPE B	TYPE 24 FRAME AND GRATE	651.99	648.32			648.52	
7-05-IN B	812+67.69	35.00' LT.		INLET, TYPE B	TYPE 24 FRAME AND GRATE	651.99	647.69	647.98			
7-06-MH A	812+67.74	47.72' LT.		MANHOLE, TYPE A, 5' DIAMETER	TYPE 1 FRAME, CLOSED LID	652.40		647.59	645.49	647.23	
7-07-IN A	813+99.65	35.00'RT.		INLET, TYPE A	TYPE 24 FRAME AND GRATE	651.46			648.00		
7-08-IN A	813+99.65	35.00'LT.		INLET, TYPE A	TYPE 24 FRAME AND GRATE	651.46	647.16				
7-09-MH A	813+99.43	48.67' LT.		MANHOLE, TYPE A, 5' DIAMETER	TYPE 8 GRATE	650.54		647.06	644.47	644.47	
7-11-IN B	815+10.00	35.00' RT.		INLET, TYPE B	TYPE 24 FRAME AND GRATE	651.16	647.10		647.40	647.40	
7-12-IN B	815+20.12	35.00' RT.		INLET, TYPE B	TYPE 24 FRAME AND GRATE	651.17			647.57	647.47	
7-13-IN A	815+20.01	35.00'LT.		INLET, TYPE A	TYPE 24 FRAME AND GRATE	651.17				648.25	
7-14-IN B	815+10.29	35.00' LT.		INLET, TYPE B	TYPE 24 FRAME AND GRATE	651.16	646.70	646.80	648.15		
7-15-MH A	815+10.72	49.09' LT.		MANHOLE, TYPE A, 5' DIAMETER	TYPE 1 FRAME, CLOSED LID	649.70		646.60	643.62	643.62	

STORM SEWER SCHEDULE

SEGMENT	SIZE		LENGTH		GRADE
148	18 " SS	X	126.2 '	@	0.40 %
149	18 " SS	X	126.1 '	@	0.50 %
150	12 " SS	X	6.0 '	@	1.67 %
151	12 " SS	X	5.6 '	@	1.79 %
152	15 " SS	X	126.0 '	@	0.50 %
153	12 " SS	X	6.0 '	@	1.67 %
154	15 " SS	X	125.9 '	@	0.41 %
155	12 " SS	X	5.7 '	@	1.75 %
156	15 " SS	X	127.2 '	@	0.40 %
157	15 " SS	X	125.2 '	@	0.50 %
158	12 " SS	X	6.6 '	@	1.52 %
159	12 " SS	X	6.0 '	@	1.67 %
160	15 " SS	X	101.3 '	@	0.40 %
161	12 " SS	X	5.4 '	@	1.85 %
162	15 " SS	X	104.2 '	@	0.50 %
163	12 " SS	X	127.0 '	@	0.50 %
164	12 " SS	X	124.8 '	@	0.40 %
165	12 " SS	X	6.0 '	@	1.67 %
166	12 " SS	X	126.0 '	@	0.51 %
167	12 " SS	X	6.0 '	@	1.67 %
168	12 " SS	X	127.5 '	@	0.50 %

STORM SEWER SCHEDULE

SEGMENT	SIZE		LENGTH		GRADE
173	12 " SS	X	84.2 '	@	0.50 %
174	12 " SS	X	8.3 '	@	1.20 %
175	12 " SS	X	82.9 '	@	0.97 %
176	12 " SS	X	70.0 '	@	0.49 %
177	12 " SS	X	7.2 '	@	1.39 %
178	36 " SS	X	126.6 '	@	0.81 %
179	12 " SS	X	107.7 '	@	0.56 %
180	12 " SS	X	9.2 '	@	1.09 %
181	36 " SS	X	106.3 '	@	0.80 %
182	12 " SS	X	7.0 '	@	1.00 %
183	15 " SS	X	70.0 '	@	0.43 %
184	12 " SS	X	7.5 '	@	1.33 %
185	15 " SS	X	8.5 '	@	1.18 %
186	12 " SS	X	81.1 '	@	0.70 %
187	36 " SS	X	87.3 '	@	0.80 %

REVISIONS	
NAME	DATE

ILLINOIS DEPARTMENT OF TRANSPORTATION

DRAINAGE PLAN
STA. 801+00 TO 816+00

SCALE: VERT. 1"=50'
HORIZ. 1"=50'
DATE 7/5/2012

DRAWN BY RLH
CHECKED BY MED

TLG PROJ. 12-0581.4
PLOT DATE = 7/5/2012
FILE NAME = p:\civil_idot.dist3\canego\phase 1\DRNG-R2.dgn