PROPOSED LEGEND

- (1) POLYMERIZED HOT-MIX ASPHALT SURFACE COURSE, MIX D, N70 2"
- (2) POLYMERIZED HOT-MIX ASPHALT BINDER COURSE, IL-12.5, N70 2.25"
- (3) HOT-MIX ASPHALT BINDER COURSE, IL-19.0, N70 8"
- ✱ ✱ (9A) SUB-BASE GRANULAR MATERIAL, TYPE A, 12"
- ✱ ✱ (9B) LIME MODIFIED SOIL 12"
- ✱ ✱ ✱ (10) EMBANKMENT
- (11) HOT-MIX ASPHALT SHOULDERS 8"
- (12) AGGREGATE SHOULDERS, TYPE B, 8"
- (14) PIPE UNDERDRAIN 4" (SPECIAL) (STD 601201-D4) AT 1% SLOPE
- (15) 4" PERFORATED CORRUGATED POLYETHYLENE TUBING @ 0.40% MIN. SLOPE (SEE PROP. UNDERDRAIN PROFILE SHEETS) (PAID FOR AS "PIPE UNDERDRAINS 4")
- (16) CONCRETE HEADWALL FOR PIPE DRAIN (PER STD 601101)
- (18) CONCRETE CURB & GUTTER, TYPE M-4.06
- (20) CONCRETE MEDIAN SURFACE 4"
- (20A) CORRUGATED MEDIAN
- (22) 4" TOPSOIL PLACEMENT
- ✱ (23) HMA PAVEMENT (FULL DEPTH), 12.25"

LEGEND NOTES:

✱ ITEMS 1, 2, & 3 WILL BE PAID FOR AT THE CONTRACT UNIT PRICE PER SQUARE YARD FOR HMA PAVEMENT (FULL-DEPTH), 12.25"

✱ ✱ SUB-BASE GRANULAR MATERAIL IS REQUIRED AT:
STA 1516+39.24 TO STA 1521+67.87 (WT-WBL)
STA 3515+30.00 TO STA 3523+00.00 (WT-EBL)
CONTRACTOR OPTION FOR SUBGRADE IMPROVEMENT METHOD AT ALL OTHER LOCATIONS.

✱ ✱ ✱ PLACE ADDITIONAL SUB GRAN MAT A ABOVE 12"
SUB GRAN MAT A TO BOTTOM OF HMA SHOULDER.

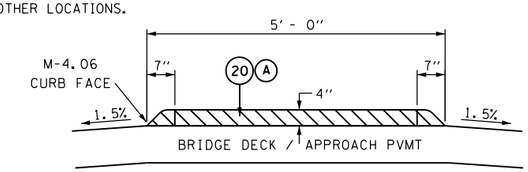

RAISED MEDIAN - BRIDGE DECK / APPROACH PAVEMENT

(BRIDGE APPROACH PAVEMENT)	STA 25+32.64 TO STA 25+62.64
(BRIDGE OMISSION BK-BK ABUTMENT)	STA 25+62.64 TO STA 27+73.64
(BRIDGE APPROACH PAVEMENT)	STA 27+73.64 TO STA 28+03.64

(A) SEE MEDIAN DETAIL IN STRUCTURE PLANS FOR SN 036-0065

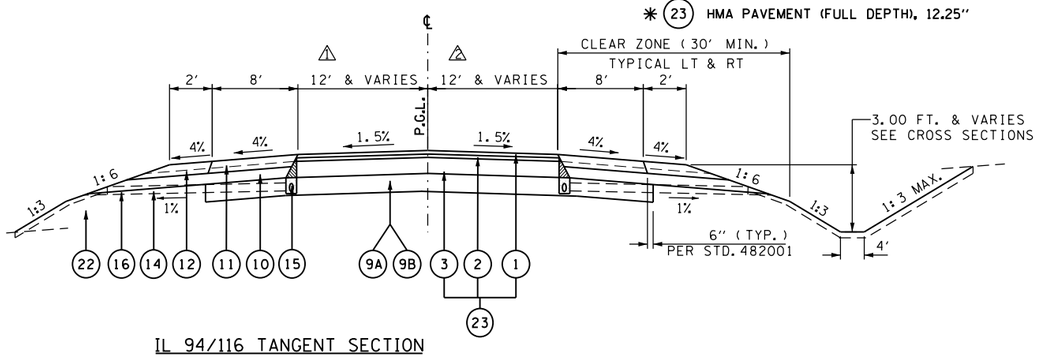

IL 94/116 TANGENT SECTION

LT 1 LANE WIDTH (EOP-℄)	STA TO STA (EOP - ℄)	RT 2 LANE WIDTH (EOP-℄)	STA TO STA (℄ - EOP)
13.00 TO 14.00	STA 10+30.00 TO STA 10+90.00	13.00 TO 14.00	STA 10+30.00 TO STA 10+90.00
16.00 TO 12.00	STA 36+88.33 TO STA 38+07.82	15.00 TO 12.00	STA 36+88.33 TO STA 38+07.82
12.00	STA 38+07.82 TO STA 41+27.83	12.00	STA 38+07.82 TO STA 41+27.83
12.00 TO 13.00	STA 41+27.83 TO STA 42+51.82	12.00 TO 13.00	STA 41+27.83 TO STA 42+51.82
13.00	STA 42+84.69 TO STA 42+84.69	13.00	STA 42+84.69 TO STA 42+84.69

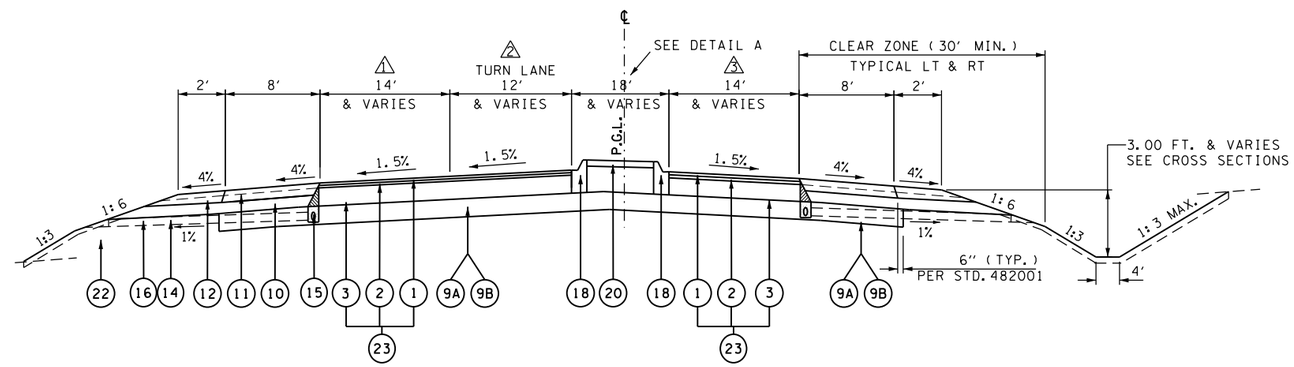

IL 94/116 TURN LANE WITH RAISED MEDIAN

LT 1 LANE WIDTH (EOP-MED)	2 TURN LANE	STA TO STA (EOP - ℄)	2 TURN LANE	RT 3 LANE WIDTH (MED-EOP)	STA TO STA (EOP - ℄)
14.00	12.00	STA 22+70.72 TO STA 25+32.64	0.00	14.00	STA 22+70.72 TO STA 25+32.64
(BRIDGE APPROACH PAVEMENT)		STA 25+32.64 TO STA 25+62.64	(BRIDGE APPROACH PAVEMENT)		STA 25+32.64 TO STA 25+62.64
(BRIDGE OMISSION BK-BK ABUTMENT)		STA 25+62.64 TO STA 27+73.64	(BRIDGE OMISSION BK-BK ABUTMENT)		STA 25+62.64 TO STA 27+73.64
(BRIDGE APPROACH PAVEMENT)		STA 27+73.64 TO STA 28+03.64	(BRIDGE APPROACH PAVEMENT)		STA 27+73.64 TO STA 28+03.64
14.00	0.00	STA 28+03.64 TO STA 30+69.72	12.00	14.00	STA 28+03.64 TO STA 30+69.72
14.00	0.00	STA 31+53.10 TO STA 32+79.83	0.00	29.00 TO 14.00	STA 31+53.10 TO STA 32+02.83
14.00 TO 15.00	0.00	STA 32+79.83 TO STA 35+59.22	0.00	14.00	STA 32+02.83 TO STA 35+59.22
15.00	0.00	STA 35+59.22 TO STA 36+88.33	0.00	14.00	STA 35+59.22 TO STA 36+88.33

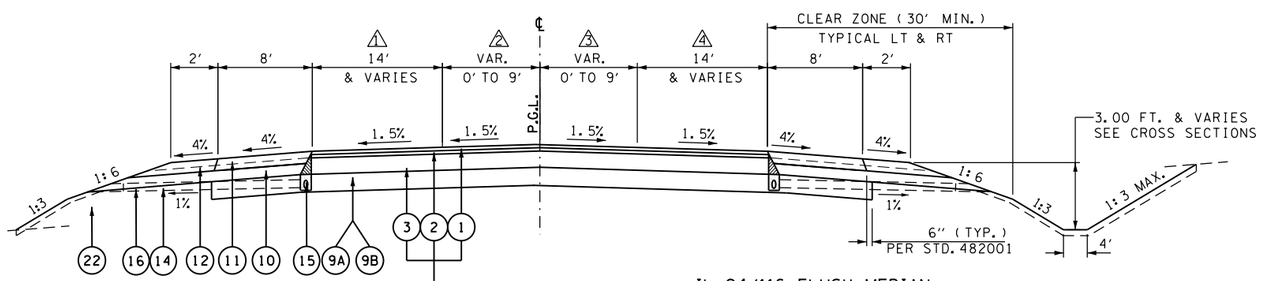

IL 94/116 FLUSH MEDIAN

LT 1 LANE WIDTH (EOP-MED)	2 LT MEDIAN (MED-℄)	STA TO STA (EOP - ℄)	3 RT MEDIAN (MED-℄)	RT 4 LANE WIDTH (EOP-MED)	STA TO STA (EOP - ℄)
14.00	0.00 TO 9.00	STA 10+90.00 TO STA 16+30.00	0.00 TO 9.00	14.00	STA 10+90.00 TO STA 16+30.00
14.00	9.00	STA 16+30.00 TO STA 22+70.72	9.00	14.00	STA 16+30.00 TO STA 22+70.72
14.00	9.00 TO 14.00	STA 30+69.72 TO STA 31+53.10	9.00 TO 14.00	14.00	STA 30+69.72 TO STA 31+53.10

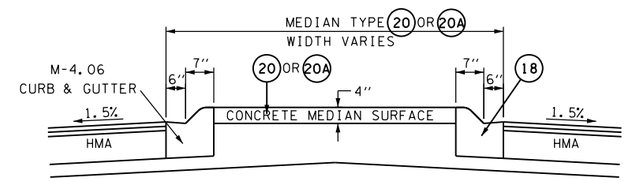

DETAIL A
IL 94/116 RAISED MEDIAN

MEDIAN TYPE	MEDIAN WIDTH (EOP - EOP)	STA TO STA (EOP - ℄)
(20)	6.00	STA 22+70.72 TO STA 25+32.64
	BRIDGE & APPROACH PAVEMENT OMMISSION	
(20)	6.00	STA 28+03.64 TO STA 30+69.72
(20)	6.00 TO 18.00	STA 31+53.10 TO STA 32+02.83
(20)	18.00	STA 32+02.83 TO STA 32+79.83
(20)	18.00 TO 4.00	STA 32+79.83 TO STA 35+59.22
(20A)	6.73 TO 2.00	STA 35+59.22 TO STA 36+88.33

FILE NAME = D468409-SHT-08-TYP-IL94-116.dgn	USER NAME = zachl	DESIGNED - DBS	REVISED -
		DRAWN - PSBA	REVISED -
	PLOT SCALE = 100.0000 ' / in.	CHECKED - CSB	REVISED -
	PLOT DATE = 10/16/2012	DATE - 10/2012	REVISED -

STATE OF ILLINOIS
DEPARTMENT OF TRANSPORTATION

TYPICAL SECTIONS
IL ROUTE 94 /116

SCALE: N.A. | SHEET NO. 8 OF 18 SHEETS | STA. | TO STA.

F.A.P. RTE.	SECTION	COUNTY	TOTAL SHEETS	SHEET NO.
313	7-2; 6-1	HENDERSON	976	88
		CONTRACT NO. 68409		
		ILLINOIS FED. AID PROJECT		