Notes:

See sheet 12 of 22 for Detail A and View B-B.
Approach slab and parapet concrete shall be paid for as Concrete Superstructure.
Approach footing concrete shall be paid for as Concrete Structures.
Reinforcement shall be paid for as Reinforcement Bars, Epoxy Coated.
For v(E) bar details, see sheet 10 of 22.
The approach footing maximum applied service bearing pressure (Qmax) = 2.0 ksf.
For bar splicer details, see sheet 21 of 22.
Cost of excavation for approach footing included with Concrete Structures.
For Porous Granular Embankment (Special) and drainage treatment details, see sheet 2 of 22.
For additional parapet details, see sheet 10 of 22.

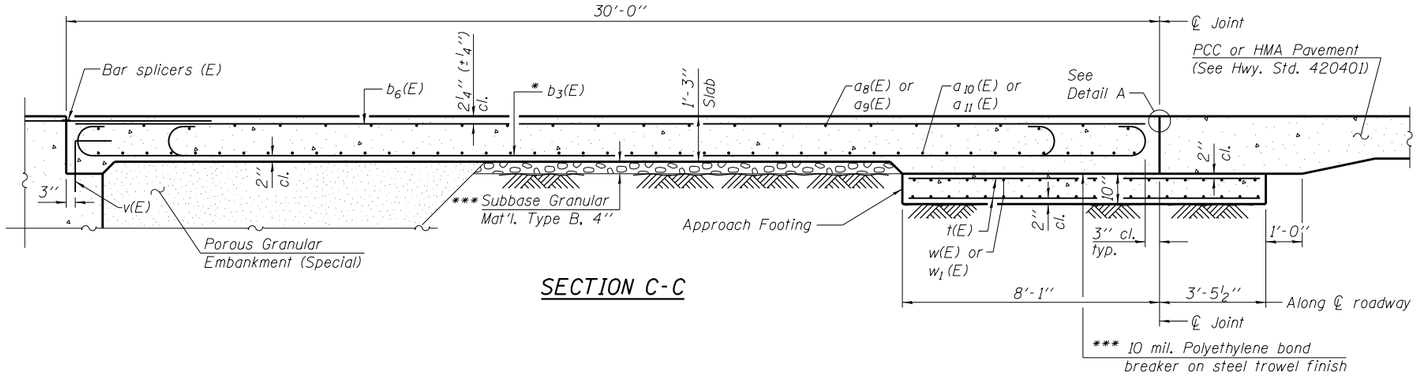

SECTION C-C

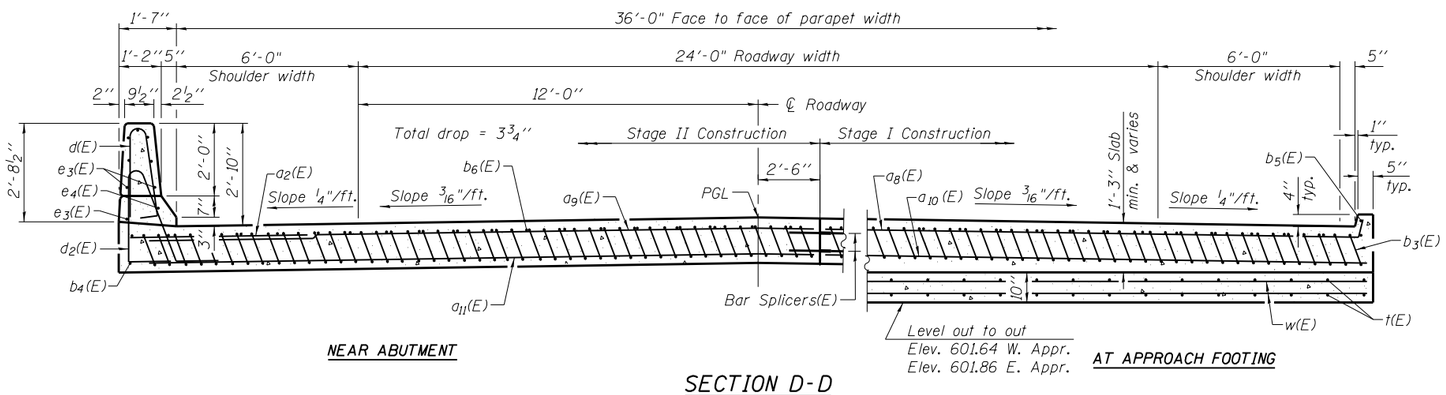

NEAR ABUTMENT

AT APPROACH FOOTING

SECTION D-D

(See Plan for dimensions not shown)

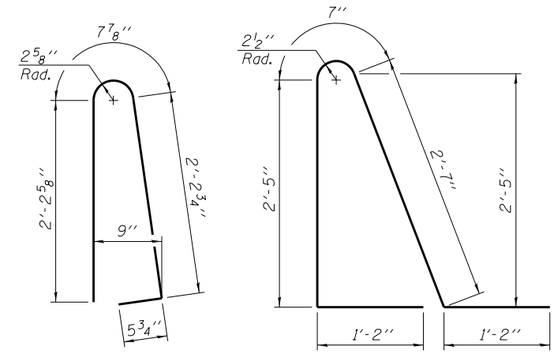

BAR d(E)

BAR d2(E)

* Tilt #9 b3(E) bars as required to maintain clearance.

*** Cost included with Concrete Superstructure.

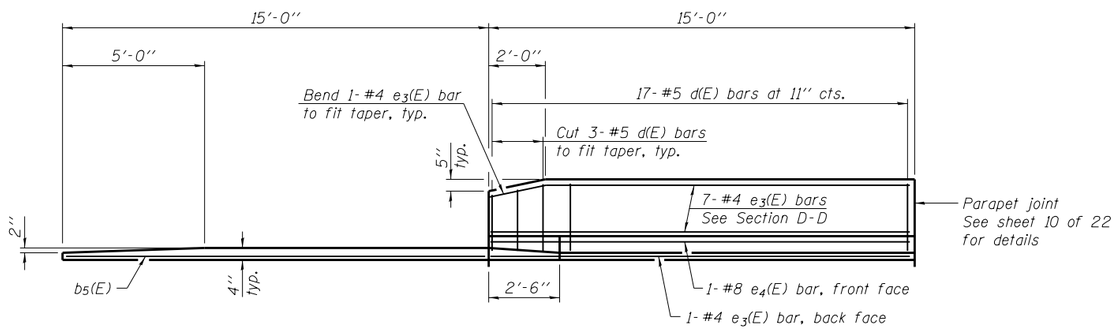

VIEW E-E

TWO APPROACHES
BILL OF MATERIAL

	Bar	No.	Size	Length	Shape
	a2(E)	48	#6	6'-6"	
	a8(E)	50	#4	18'-9"	
	a9(E)	50	#4	24'-6"	
	a10(E)	92	#5	18'-7"	
	a11(E)	92	#5	24'-4"	
	b3(E)	176	#9	29'-9"	
	b4(E)	4	#4	14'-8"	
	b5(E)	4	#4	14'-2"	
	b6(E)	62	#4	29'-8"	
	d(E)	68	#5	5'-7"	
	d2(E)	68	#5	7'-11"	
	e3(E)	32	#4	14'-8"	
	e4(E)	4	#8	14'-8"	
	t(E)	152	#4	11'-2"	
	w(E)	80	#5	18'-7"	
	w1(E)	80	#5	24'-4"	
	Concrete Superstructure			Cu. Yd.	121.1
	Concrete Structures			Cu. Yd.	26.9
**	Reinforcement Bars, Epoxy Coated			Pound	31,280

** 26,570 Superstructure
4,710 Substructure

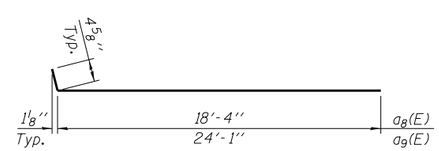

BARS a8(E) or a9(E)

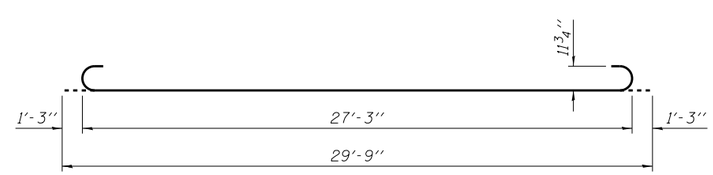

BAR b3(E)

BA-L 1-27-12

(Sheet 2 of 2)

FILE NAME = c:\pw_work\pwidot\sparksgw\d0325252\D590515-72A19-013-appr-det.dgn
CB PROJECT NO 10005-1

Coombe-Bloxdorf P.C.
-CIVIL ENGINEERS-
-STRUCTURAL ENGINEERS-
-LAND SURVEYORS-
Design Firm License No. 184-002703

USER NAME = sparksgw	DESIGNED - CME	REVISED -	
	CHECKED - MCB	REVISED -	
PLOT SCALE = 02.000 ':' / in.	DRAWN - MML	REVISED -	
PLOT DATE = Oct-19-2012 02:14:50PM	CHECKED - MCB	REVISED -	

STATE OF ILLINOIS
DEPARTMENT OF TRANSPORTATION

BRIDGE APPROACH SLAB DETAILS
STRUCTURE NO. 059-0515

SHEET NO. 13 OF 22 SHEETS

F.A.P. RTE.	SECTION	COUNTY	TOTAL SHEETS	SHEET NO.
325	116BR-1	MACOUPIN	67	49
		CONTRACT NO. 72A19		
		ILLINOIS FED. AID PROJECT		