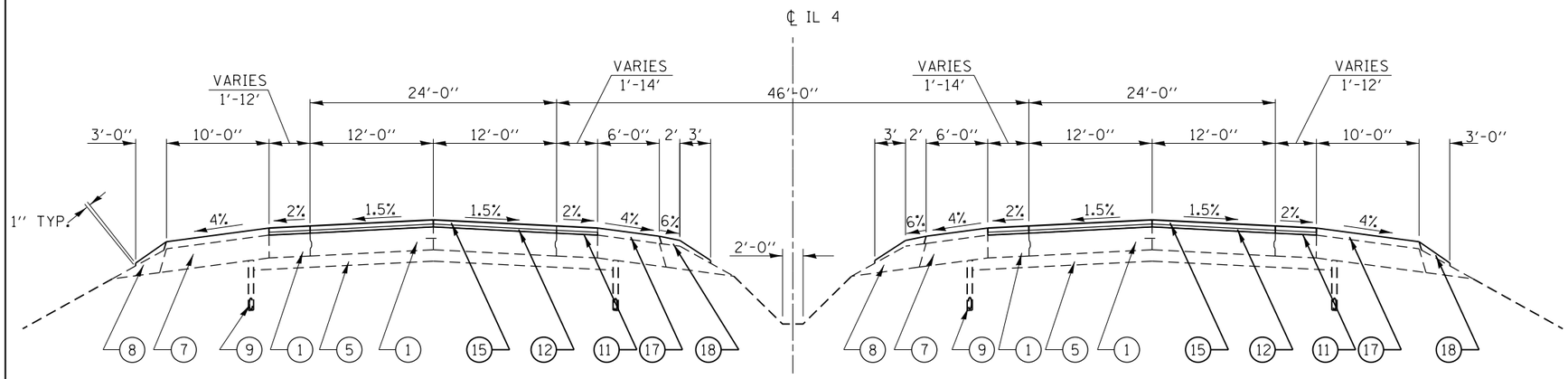

TYPICAL SECTION # 2

STA. 217+25.77 TO STA. 221+81.13
STA. 228+16.41 TO STA. 232+15.30
STA. 248+42.80 TO STA. 251+84.96
STA. 259+24.31 TO STA. 262+65.15

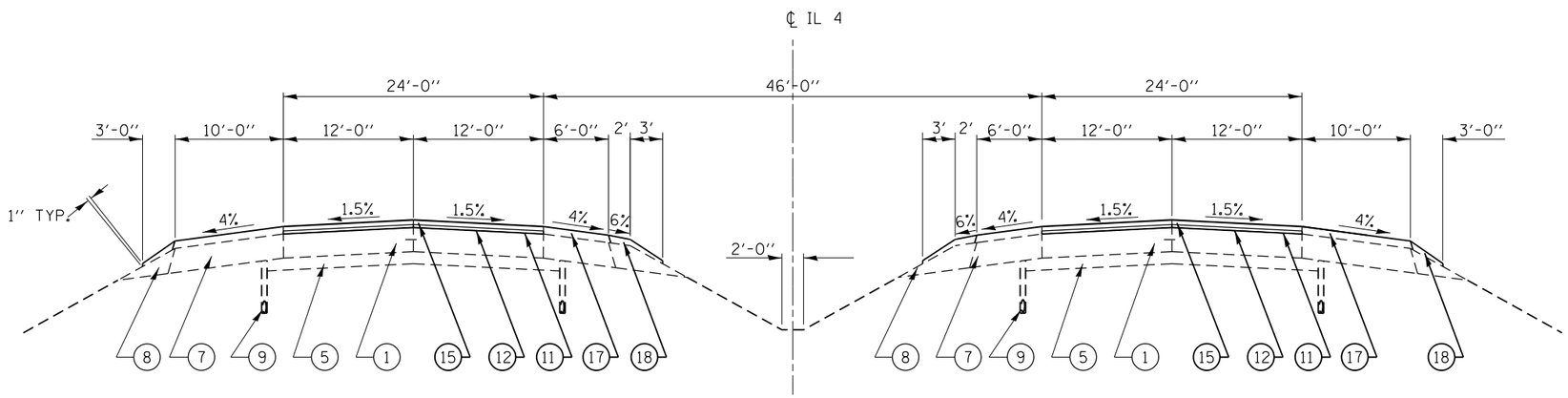

TYPICAL SECTION # 1

STA. 216+00.00 TO STA. 217+25.77
STA. 223+91.84 TO STA. 224+86.37
STA. 232+15.30 TO STA. 238+48.39
BRIDGE OMISSION STA. 238+48.39 TO STA. 240+90.36
STA. 240+90.36 TO STA. 248+42.80
STA. 262+65.15 TO STA. 263+97.87

LEGEND

1. EXIST. CONTINUOUSLY REINFORCED PCC PAVEMENT 8"
2. EXIST. PAVEMENT WIDENING 8"
3. EXIST. PCC PAVEMENT 10"
4. EXIST. HMA PAVEMENT 11"
5. EXIST. STABILIZED SUB-BASE 4"
6. EXIST. HMA OVERLAY, 2"-6"
7. EXIST. HMA SHOULDERS 8"
8. EXIST. AGGREGATE SHOULDER, TYPE B
9. EXIST. SUB-SURFACE DRAIN 4"
10. PROP. SURFACE REMOVAL VARIABLE DEPTH
11. PROP. BITUMINOUS MATERIAL (PRIME COAT)
12. PROP. LEVELING BINDER (MM) N90 (1")
13. PROP. LEVELING BINDER (MM) N50 (1")
14. PROP. LEVELING BINDER (MM) N90 (3/4")
15. PROP. HMA SURFACE COURSE, MIX "E" N90 (1 1/2")
16. PROP. HMA SURFACE COURSE, MIX "C" N50 (1 1/2")
17. PROP. HMA SHOULDERS
18. PROP. AGGREGATE SHOULDER, TYPE B
19. PROP. COMB. CONC. CURB & GUTTER
20. PROP. CONCRETE MEDIAN SURFACE 4"
21. PROP. HMA BASE COURSE 12"
22. PROP. AGGREGATE SUB-BASE GRANULAR MATERIAL 6"
23. PROP. UNDERDRAIN 4"
24. PROP. SUB-BASE GRANULAR MATERIAL, TYPE B

*NOTE:

SEE SUPERELEVATION TRANSITION DETAIL FOR TWO LANE HIGHWAY SHEET FOR SUPERELEVATION DATA.

FILE NAME = c:\pw_work\pwidot\sparksgw\d0290859\D672F23-sht-typical.dgn	USER NAME = sparksgw	DESIGNED -	REVISED -	STATE OF ILLINOIS DEPARTMENT OF TRANSPORTATION	TYPICAL SECTIONS F.A.P. 662/67 (IL 4/97)	F.A.P. RTE.	SECTION	COUNTY	TOTAL SHEETS	SHEET NO.
		DRAWN -	REVISED -			••	1(RS),2(RS),S(RS-6)	SANGAMON	116	23
	PLOT SCALE = 40.0000 ' / in.	CHECKED -	REVISED -					CONTRACT NO. 72F23		
	PLOT DATE = Oct-19-2012 03:55:26PM	DATE -	REVISED -		SCALE: SHEET OF SHEETS STA. TO STA.		ILLINOIS FED. AID PROJECT			