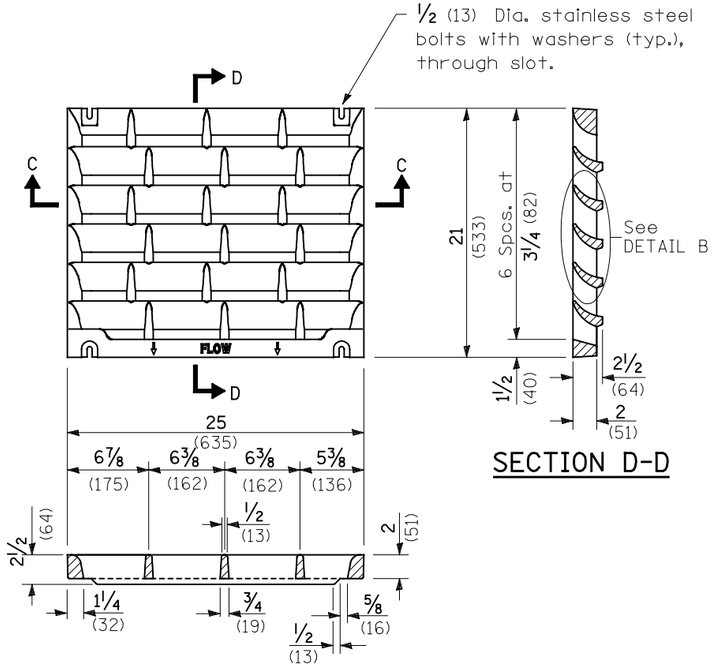

SECTION D-D

SECTION C-C

DETAIL OF CAST GRATE

Type B requires 1 grate
Type C requires 2 grates
Type D requires 3 grates

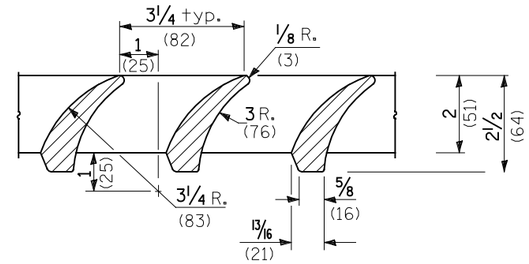

DETAIL B

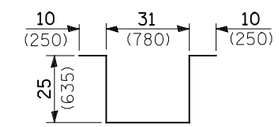

BAR u

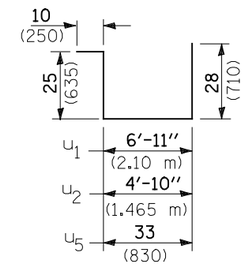

BARS u_1,u_2&u_5

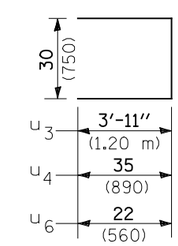

Bars u_3,u_4&u_6

1/2 (13) Dia. tapped hole for bolting down grate, four places each frame.

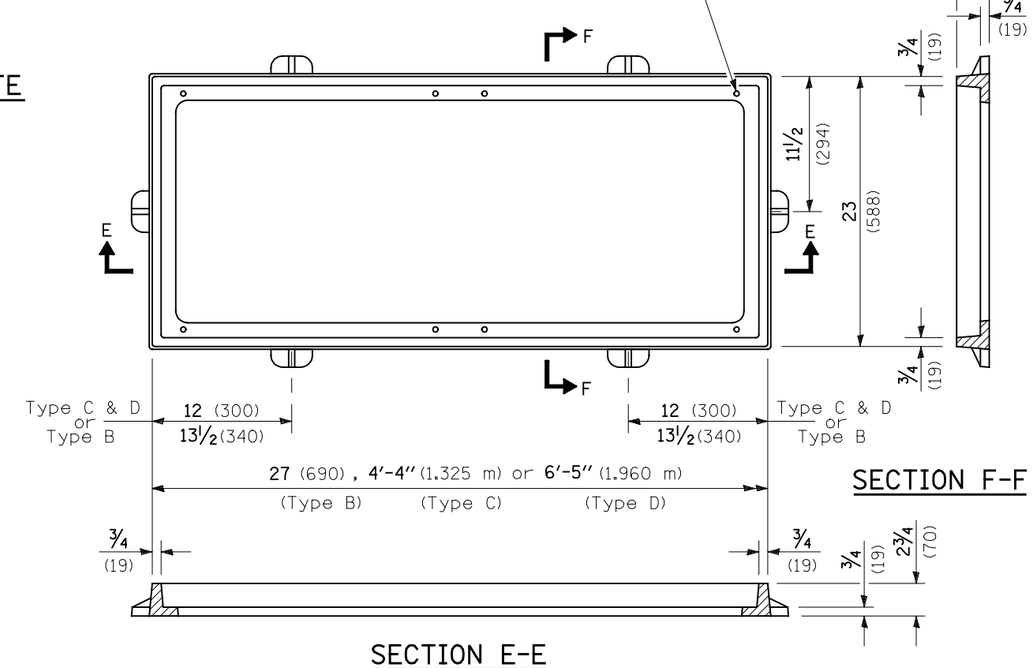

SECTION F-F

SECTION E-E

DETAIL OF CAST FRAME
(Type C shown)

INLET BOX

REQUIRED MATERIAL

TYPE B

Bar	Qty.	Size	Length
u	4	No. 4 (No.13)	8'-5" (2.550 m)
u_5	3	No. 4 (No.13)	8'-0" (2.425 m)
u_6	4	No. 4 (No.13)	6'-2" (1.870 m)
Concrete		cu. yds. (m^3)	0.5 (0.4)
Reinf. bars		lbs. kg	55.0 (25.0)
Grating		sq. ft. (m^2)	3.6 (0.34)

TYPE C

Bar	Qty.	Size	Length
u	6	No. 4 (No.13)	8'-5" (2.550 m)
u_2	3	No. 4 (No.13)	10'-1" (3.060 m)
u_4	4	No. 4 (No.13)	8'-4" (2.530 m)
Concrete		cu. yds. (m^3)	0.8 (0.6)
Reinf. bars		lbs. kg	76 (34.5)
Grating		sq. ft. (m^2)	7.3 (0.68)

TYPE D

Bar	Qty.	Size	Length
u	8	No. 4 (No.13)	8'-5" (2.550 m)
u_1	3	No. 4 (No.13)	12'-2" (3.695 m)
u_3	4	No. 4 (No.13)	10'-4" (3.150 m)
Concrete		cu. yds. (m^3)	1.1 (0.8)
Reinf. bars		lbs. kg	97.0 (44.0)
Grating		sq. ft. (m^2)	10.9 (1.02)

BRIDGE APPROACH SHOULDER PAVEMENT AND DRAIN

FILE NAME = S:\Projects\410-0022-2HY 255 S\dgn\CADD Sheets\D876A89-sht-misdetail.dgn	USER NAME = Paul	DESIGNED - JWS	REVISED -
		DRAWN - PDB	REVISED -
	PLOT SCALE = 40.0000 ' / IN.	CHECKED - BRM	REVISED -
	PLOT DATE = 7/31/2012	DATE - 7-14-11	REVISED -

STATE OF ILLINOIS
DEPARTMENT OF TRANSPORTATION

FAI 255 MISCELLANEOUS DETAIL

SCALE: | SHEET NO. 2 OF 6 SHEETS | STA. | TO STA.

F.A.I RTE.	SECTION	COUNTY	TOTAL SHEETS	SHEET NO.
255	60-(7,8)RS-2	MADISON	261	191

CONTRACT NO. 76A89

FED. ROAD DIST. NO. | ILLINOIS | FED. AID PROJECT