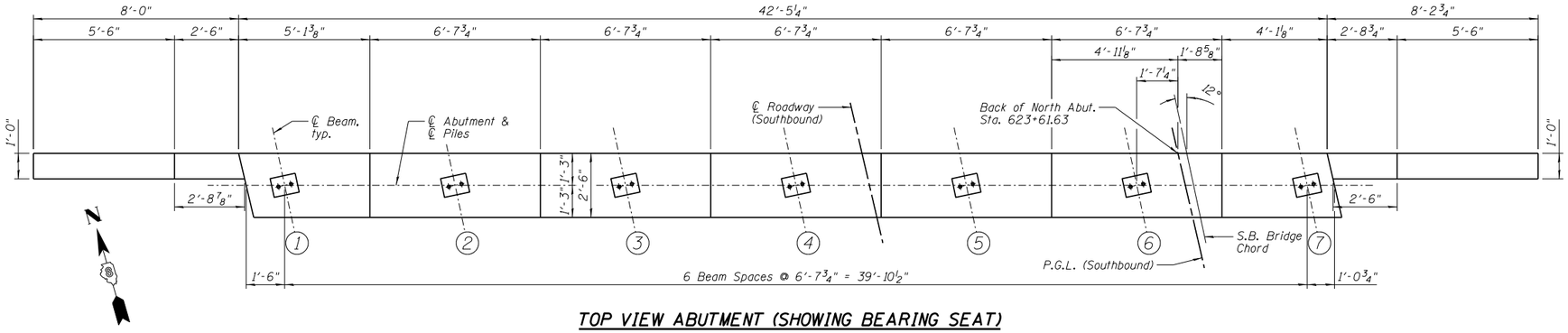

TOP VIEW ABUTMENT (SHOWING BEARING SEAT)

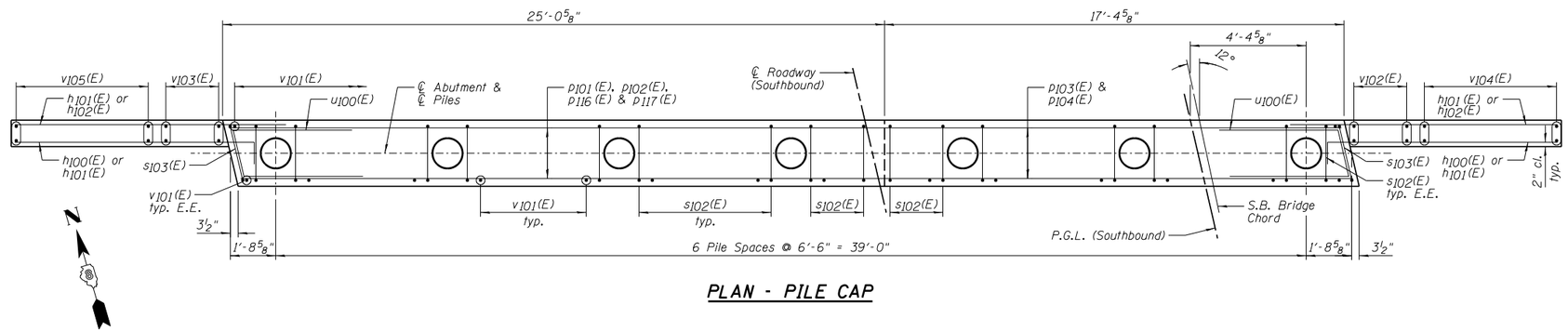

PLAN - PILE CAP

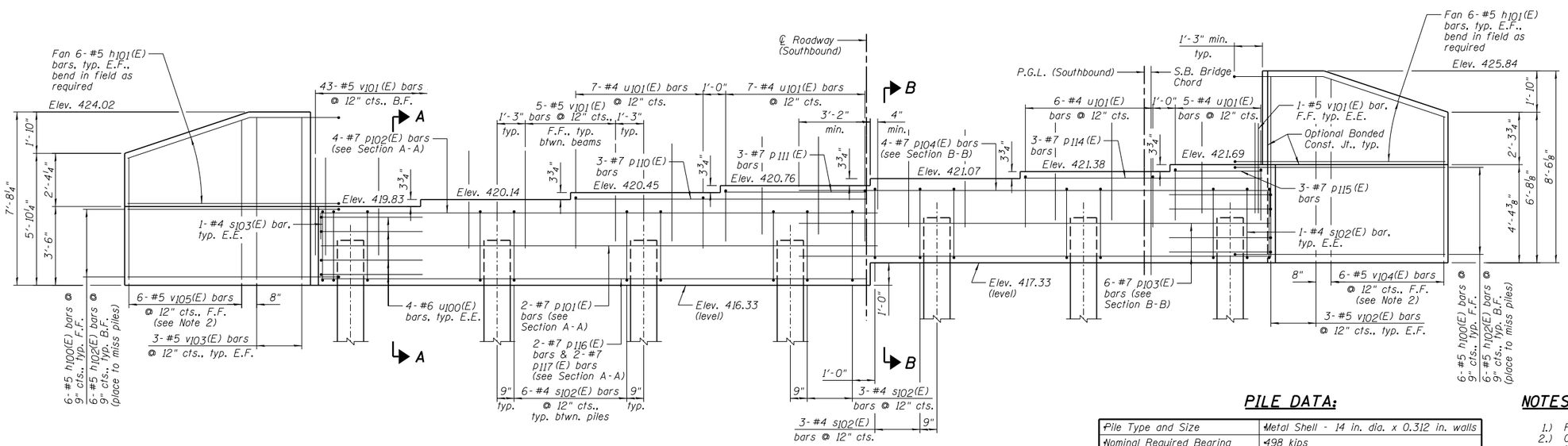

ELEVATION

(Looking North)

NORTH ABUTMENT BILL OF MATERIAL

Bar	No.	Size	Length	Shape
h100(E)	41	#5	10'-2"	
h101(E)	24	#5	10'-6"	
h102(E)	41	#5	10'-4"	
p101(E)	2	#7	25'-3"	
p102(E)	4	#7	26'-5"	
p103(E)	6	#7	21'-1"	
p104(E)	4	#7	22'-3"	
p110(E)	3	#7	12'-8"	
p111(E)	3	#7	6'-2"	
p114(E)	3	#7	10'-1"	
p115(E)	3	#7	3'-7"	
p116(E)	2	#7	24'-0"	
p117(E)	2	#7	24'-3"	
s102(E)	38	#4	11'-5"	
s103(E)	2	#4	11'-7"	
u100(E)	8	#6	11'-2"	
u101(E)	25	#4	6'-8"	
v101(E)	75	#5	4'-4"	
v102(E)	6	#5	8'-1"	
v103(E)	6	#5	7'-4"	
v104(E)	6	#5	14'-2"	
v105(E)	6	#5	12'-8"	

Item	Unit	Quantity
Structure Excavation	Cu. Yd.	194
Concrete Structures	Cu. Yd.	26.2
Reinforcement Bars, Epoxy Coated	Pound	2,800
Furnishing Metal Shell Piles 14" x 0.312"	Foot	516
Driving Piles	Foot	516
Test Pile Metal Shells	Each	1
Geocomposite Wall Drain	Sq. Yd.	44
Pipe Underdrains for Structures 4"	Foot	79
Porous Granular Embankment, Special	Cu. Yd.	84

PILE DATA:

Pile Type and Size	Metal Shell - 14 in. dia. x 0.312 in. walls
Nominal Required Bearing	498 kips
Factored Resistance Available	274 kips
Estimated Pile Length	66 Feet
Number of Production Piles	6
Number of Test Piles	1

NOTES:

1.) Pour steps monolithically with cap.
2.) Order v104(E) and v105(E) bars full length. Cut according to Bar Cutting Diagram on Sheet A31. Use remainder of bars in opposite face of wingwall.
3.) Bend or cut h100(E) bars to miss piles.
4.) E.E. denotes Each End, F.F. denotes Front Face, B.F. denotes Back Face and E.F. denotes Each Face.
5.) See Sheet A31 for Section A-A, Section B-B and other details.

Farnsworth GROUP, INC.
2709 McGraw Drive
Bloomington, Illinois 61704
309-663-8435, 309-663-1571 fax

	DESIGNED - TCR/JCZ	REVISED
	CHECKED - JML	REVISED
	DRAWN - DJM/JWK	REVISED
DATE - 06/26/12	CHECKED - MSW	REVISED

STATE OF ILLINOIS
DEPARTMENT OF TRANSPORTATION

NORTH ABUTMENT, SOUTHBOUND
STRUCTURE NO. 082-0385 NB & 082-0386 SB

SHEET NO. A30 OF 48 SHEETS

F.A.P. RTE.	SECTION	COUNTY	TOTAL SHEETS	SHEET NO.
788	520-1-2B	ST. CLAIR	94	61
		CONTRACT NO. 76F69		
	ILLINOIS FED. AID PROJECT			

24-8621