PLANTER BOX 1

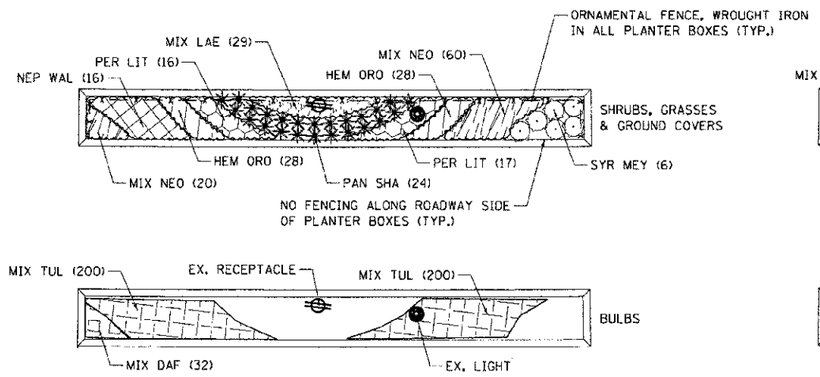

PLANTER BOX 2

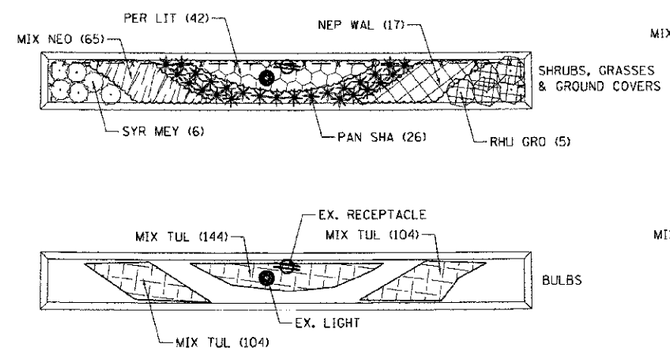

PLANTER BOX 3

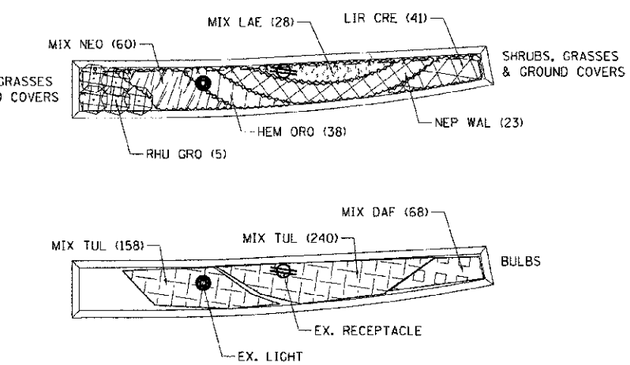

PLANTER BOX 4

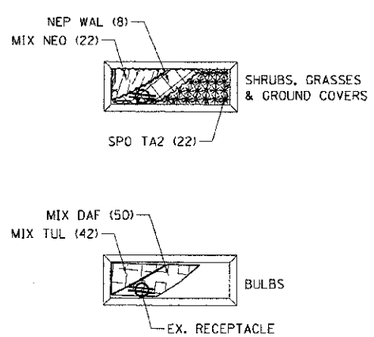

PLANTER BOX 5

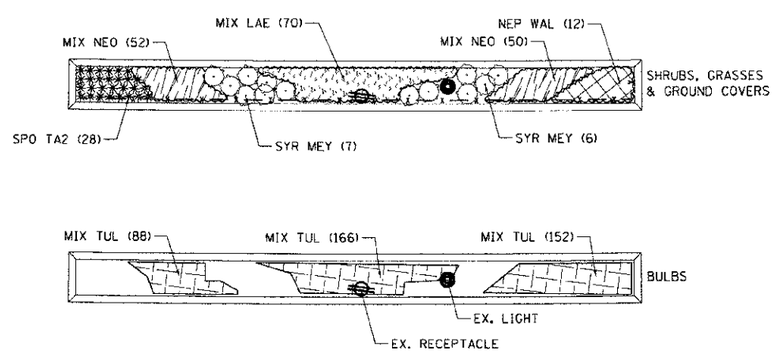

PLANTER BOX 6

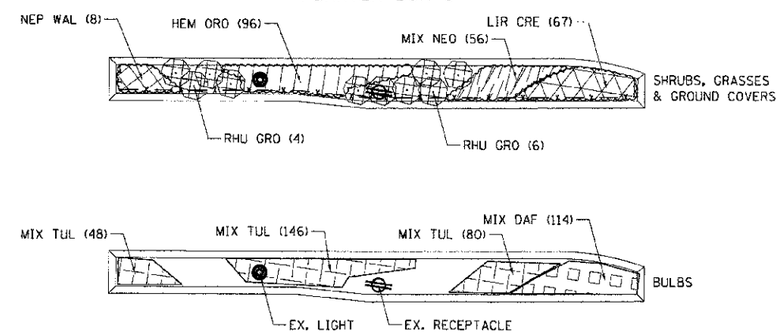

NOTE:
1. SEE PLAN SHEETS 10 TO 14 FOR THE LOCATIONS OF ALL TREES.
2. EACH PLANTER BOX CONTAINS PERENNIAL BULBS AND CONTAINER GROWN PERENNIALS TO BE PLANTED TOGETHER.

FILE NAME = $FILEL$	USER NAME = $USER$	DESIGNED - JM	REVISED -	STATE OF ILLINOIS DEPARTMENT OF TRANSPORTATION	PLANTER BOX DETAIL 1	F.A.S. RTE.	SECTION	COUNTY	TOTAL SHEETS	SHEET NO.
		DRAWN - MDN	REVISED -			1279	06-00017-01-LS	LA SALLE	29	15
exp U.S. Services Inc. Chicago, IL BUILDINGS-EARTH & ENVIRONMENT-ENERGY INDUSTRIAL-INFRASTRUCTURE-SUSTAINABILITY	PLOT SCALE = $SCALE$	CHECKED - JB	REVISED -					CONTRACT NO. 87355		
	PLOT DATE = $DATE$	DATE - 10/19/12	REVISED -		SCALE: 1"=10' SHEET NO. OF SHEETS STA. TO STA.	FED. ROAD DIST. NO.	ILLINOIS	FED. AID PROJECT		