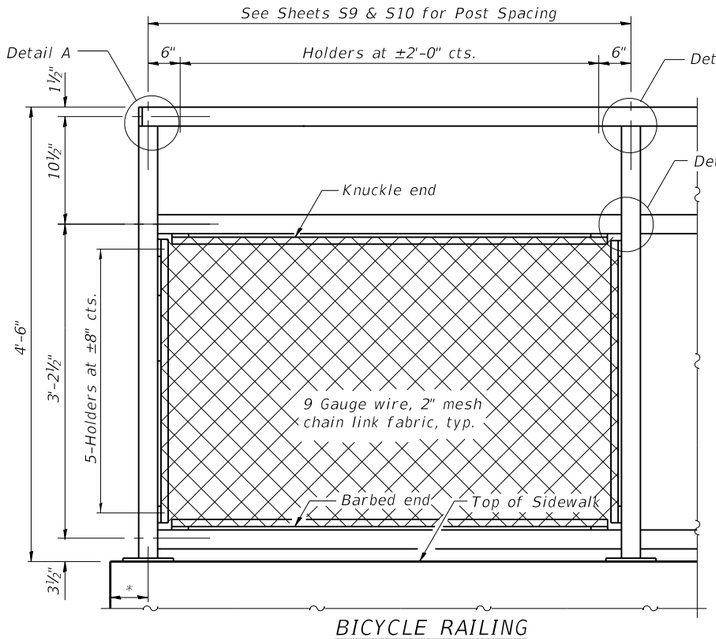

BICYCLE RAILING

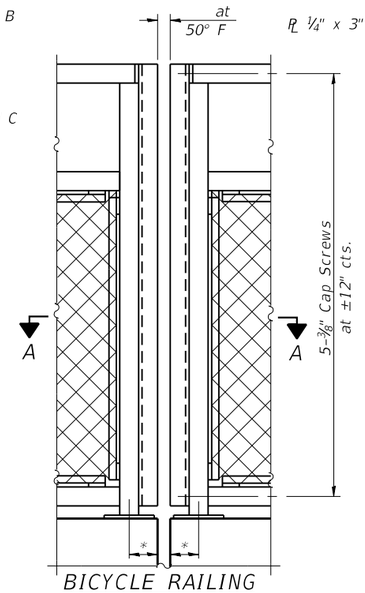

BICYCLE RAILING

* See sheets S9 & S10

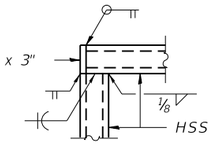

DETAIL A

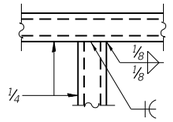

DETAIL B

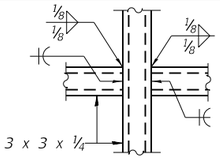

DETAIL C

All steel elements shall be galvanized according to Article 509.05 of the Standard Specifications. All of these elements, except the chain link fabric and ties shall also be painted using the Organic Zinc Rich Primer / Epoxy / Urethane Paint System. The final finish coat shall match the color and sheen of the vinyl coat on chain link fabric. The color shall be approved by the Engineer prior to application.

The galvanized chain link fabric and ties shall be vinyl coated according to Section 509 and Article 1006.27(a)(1)d of the Standard Specifications. The color of the coat shall be black.

1

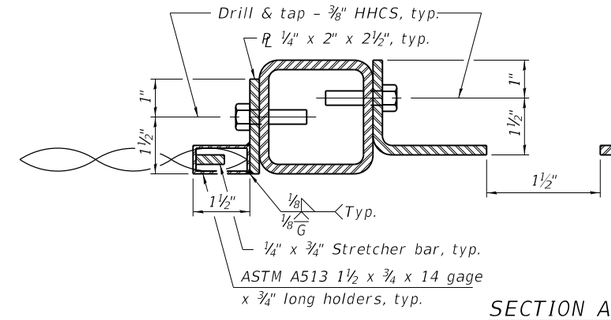

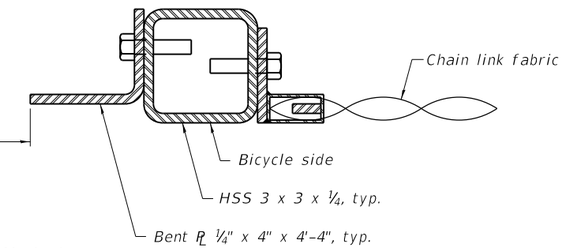

SECTION A-A

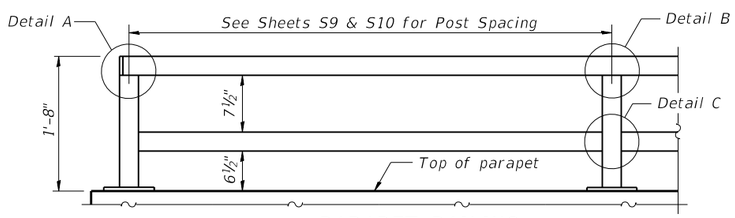

PARAPET RAILING
ELEVATION
(Inside Face of Two Element Rail)

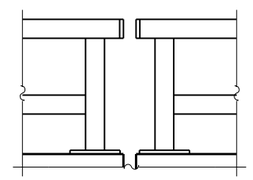

PARAPET RAILING
ELEVATION AT EXPANSION JOINT
(Two Element Rail Shown - Three Element Rail Similar)

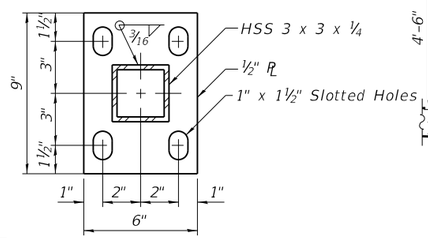

BASE PL

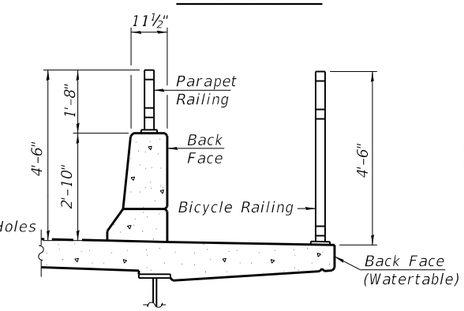

SECTION THRU DECK

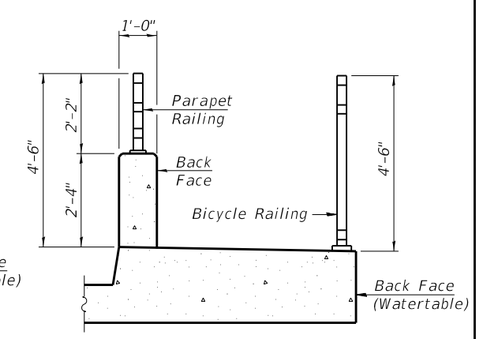

SECTION THRU SIDEWALK

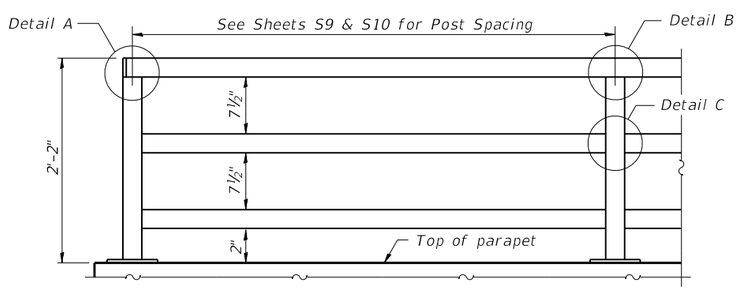

PARAPET RAILING
ELEVATION
(Inside Face of Three Element Rail)

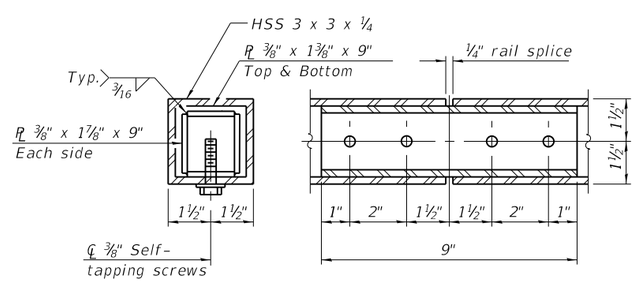

RAIL SPLICE

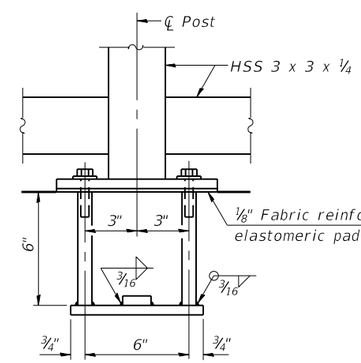

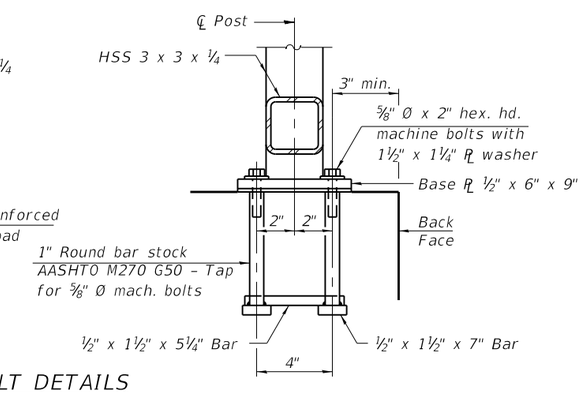

ANCHOR BOLT DETAILS

In lieu of the cast-in-place anchor device shown, the Contractor has the option of drilling and setting ⅝" Ø anchor rods according to Article 509.06 of the Standard Specifications. Embedment shall be according to the manufacturer's specifications.

Notes:
All structural steel tubing, post and railing, for parapet railing shall be CVN tested according to 1006.34(b) of the Standard Specifications.
CVN testing may be omitted for the Bicycle Railing.

BILL OF MATERIAL

Item	Unit	Quantity
Bicycle Railing	Foot	239
Parapet Railing	Foot	239

R-29 8-11-2017 (10'-0" Maximum Post Spacing)

COLLINS ENGINEERS INC
123 North Wacker Drive
Suite 300
Chicago, IL 60606
(312) 704-9300
www.collinsengr.com
ILLINOIS PROFESSIONAL DESIGN FIRM LICENSE NO. 184-000993

USER NAME =	DESIGNED - AMS	REVISED 1 01/08/19 ADDENDUM	
	CHECKED - EKM	REVISED -	
PLOT SCALE =	DRAWN - DR	REVISED -	
PLOT DATE = $DATE$	CHECKED - AMS	REVISED -	

STATE OF ILLINOIS
DEPARTMENT OF TRANSPORTATION

BICYCLE RAILING
STRUCTURE NO. 016-1162

SHEET NO. S12 OF S18 SHEETS

F.A.U RTE.	SECTION	COUNTY	TOTAL SHEETS	SHEET NO.
1291	2017-005BR	COOK	56	43
		CONTRACT NO. 62F03		
		ILLINOIS FED. AID PROJECT		

1 REV 1/9/19

$FILE1$
$DATE$