FEDERAL AID ROUTE NO.	SEC	COUNTY	TOTAL SHEETS	SHEET NO.
64	97-3B	WHITE	103	1

P-97-201-00

FOR INDEX OF SHEETS - SEE SHEET NO. 2
FOR SUMMARY OF QUANTITIES - SEE SHEET NO. 2

STATE OF ILLINOIS
DEPARTMENT OF PUBLIC WORKS AND BUILDINGS
DIVISION OF HIGHWAYS

PLANS FOR PROPOSED FEDERAL AID INTERSTATE HIGHWAY

SCALES
PLAN 1 INCH = 100 FT
PROFILE HOR 1 INCH = 100 FT
PROFILE VERT 1 INCH = 10 FT
CROSS SECTIONS 1 INCH = 5 FT

F.A.I. ROUTE 64 SECTION 97-3B WHITE COUNTY ILLINOIS POSEY COUNTY INDIANA

PROJECT I-64-8(2)125

C-97-230-66

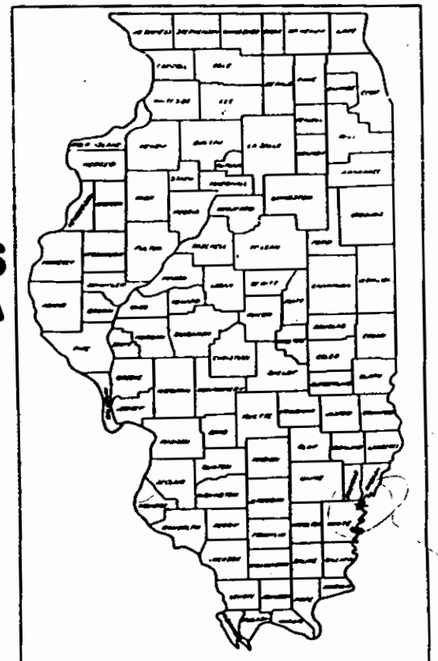

LOCATION OF SECTION INDICATED THUS:-

SECTION 97-3B INCLUDES TWO BRIDGE STRUCTURES DESIGNATED AS LEFT AND RIGHT BRIDGE (WESTBOUND AND EASTBOUND STRUCTURES)
THE LEFT AND RIGHT BRIDGES ARE 28 SPAN STEEL BEAM STRUCTURES WITH SPANS OF: 1 AT 120'-0", 6 AT 160'-0", 1 AT 120'-0", 1 AT 67'-0", 2 AT 83'-0", 2 AT 67'-0", 2 AT 83'-0", 2 AT 67'-0", 2 AT 83'-0", 2 AT 67'-0", 2 AT 83'-0", 2 AT 67'-0", 2 AT 83'-0" AND 1 AT 67'-0".
A ROADWAY WIDTH OF 30'-0" AND 2'-0" SAFETY WALKS.

EACH STRUCTURE ON REINFORCED CONCRETE PIERS AND ABUTMENTS AT STATION 5888+80

SECTION 97-3B ALSO INCLUDES FURNISHING AND FABRICATING STRUCTURAL STEEL, FURNISHING AND APPLYING SHOP COAT OF PAINT AND DELIVERY OF STRUCTURAL STEEL.

FOR INFORMATION ONLY

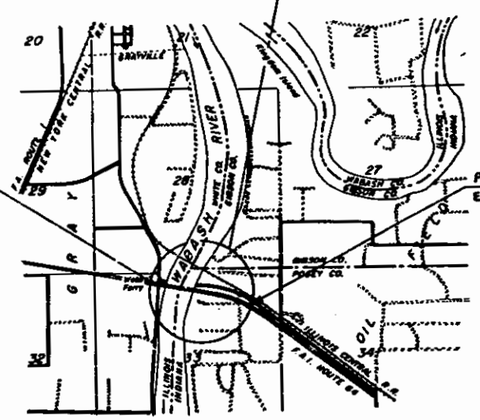

SUBMITTED FOR APPROVAL DATE 7-14-64
BY C. J. Klingelhöfer
ENGINEER OF PLANS AND SPECIFICATIONS INDIANA STATE HIGHWAY COMMISSION

CARL J. KLINGELHOFER REGISTERED No. 2420 STATE OF INDIANA PROFESSIONAL ENGINEER

APPROVED BY INDIANA STATE HIGHWAY COMMISSION
DATE 7-14-64
CHIEF HIGHWAY ENGINEER - INDIANA STATE HIGHWAY COMMISSION

APPROVED
FOR STRUCTURAL ADEQUACY ONLY
H. C. Baumann 7/8/64
Engineer of Bridge & Traffic Structures

STATE OF INDIANA
DEPARTMENT OF PUBLIC WORKS AND BUILDINGS
DIVISION OF HIGHWAYS
SUBMITTED July 7 -64 J. C. Bliss
RECOMMENDED July 8 -64 W. Wm. Crandell
PASSED July 8 -64
APPROVED July 8 -64
APPROVED July 8 -64

DEPARTMENT OF COMMERCE
BUREAU OF PUBLIC ROADS
APPROVED
DIVISION ENGINEER DATE

PLANS PREPARED BY
CONSOER TOWNSEND & ASSOCIATES
CONSULTING ENGINEERS
360 EAST GRAND AVE.
CHICAGO, ILL.

CONTRACT NO. 23794

FAI ROUTE 64 SECTION 97-3B WHITE COUNTY PROJECT I-64-8(2)125

NET LENGTH SECTION = 2705.25 FEET = 0.512 MILES
NET LENGTH PROJECT = 2705.25 FEET = 0.512 MILES

Carl W. Westfahl

7-44

F.A.I. RTE. NO.	SECTION	COUNTY	TOTAL SHEETS	SHEET NO.
64	97-38	White	103	8
FEDERAL ROAD PROJECT NO.		ILLINOIS	FED. AID	

INDEX OF SHEETS

1. TITLE SHEET
2. INDEX AND SUMMARY OF QUANTITIES: 2A, 2B, 2C TYPICAL CROSS SECTIONS FAI 64
3. PLAN & PROFILE
4. PLAN & PROFILE
5. PLAN & PROFILE
6. GENERAL PLAN
7. GENERAL PLAN
8. GENERAL PLAN
9. GENERAL PLAN
10. GENERAL PLAN
11. GENERAL PLAN
12. BORING LOGS
13. BORING LOGS
14. BORING LOGS
15. BORING LOGS
16. BORING LOGS
17. BORING LOGS
18. BORING LOGS
19. WEST ABUTMENT
20. WEST ABUTMENT DETAILS
21. PIER NO. 1
22. PIER NO. 2
23. PIER NO. 3 W.B. ROADWAY
24. PIER NO. 3 E.B. ROADWAY
25. PIER NO. 4
26. PIER NO. 5
27. PIER NO. 6
28. PIER NO. 7
29. PIER NO. 8
30. PIERS NO. 9 & 15
31. PIERS NO. 10 & 14
32. PIERS NO. 11 & 13
33. PIER NO. 12
34. PIER NO. 16
35. PIER NO. 17
36. PIERS NO. 18, 22 & 26
37. PIERS NO. 19, 21, 23, 25 & 27
38. PIERS NO. 20 & 24
39. EAST ABUTMENT W.B. ROADWAY
40. EAST ABUTMENT E.B. ROADWAY
41. SLOPEWALL DETAILS
42. BEARING DETAILS
43. BEARING DETAILS
44. BEARING DETAILS
45. BEARING DETAILS
46. BEARING DETAILS
47. STEEL FRAMING PLAN
48. STEEL FRAMING PLAN
49. STEEL FRAMING PLAN
50. STEEL FRAMING PLAN
51. STEEL FRAMING PLAN
52. STEEL FRAMING PLAN
53. STEEL FRAMING PLAN
54. STEEL FRAMING PLAN
55. STEEL FRAMING PLAN
56. BLOCKING DIAGRAM & ELEVATIONS
57. GIRDER DETAILS
58. GIRDER DETAILS
59. GIRDER DETAILS
60. GIRDER DETAILS
61. EXPANSION DEVICES
62. EXPANSION DEVICES
63. EXPANSION DEVICE DETAILS
64. MOMENTS, REACTIONS & SHEARS
65. ELEVATION KEY
66. DECK SLAB ELEVATIONS
67. DECK SLAB ELEVATIONS
68. DECK SLAB ELEVATIONS
69. DECK SLAB ELEVATIONS
70. DECK SLAB ELEVATIONS
71. DECK SLAB ELEVATIONS
72. SUPERSTRUCTURE
73. SUPERSTRUCTURE
74. SUPERSTRUCTURE
75. SUPERSTRUCTURE
76. SUPERSTRUCTURE
77. SUPERSTRUCTURE
78. SUPERSTRUCTURE
79. PARAPET & HANDRAILS
80. PARAPET & HANDRAILS
81. PARAPET & HANDRAILS
82. PARAPET & HANDRAILS
83. PARAPET & HANDRAIL DETAILS
84. ELECTRICAL DETAILS
85. PILE DETAILS
86. STANDARDS NO. 2113-1 & CONSTRUCTION IDENTIFICATION SIGN
87. STANDARD NO. 2138-4
88. STANDARD 2051. STANDARD 2079F
89. D, E, C CROSS SECTIONS
90. CROSS SECTIONS
91. CROSS SECTIONS
92. CROSS SECTIONS
93. CROSS SECTIONS
94. CROSS SECTIONS
95. CROSS SECTIONS
96. BENTS 9, 11, 13 & 15
97. BENTS 10 & 14
98. BENT 12 & 16
99. BENT 17
100. BENTS 18, 22 & 26
101. BENTS 19, 21, 23, 25 & 27
102. BENTS 20 & 24
103. STANDARDS 2114, 1971-3
103A. STANDARD 2169-2

SUMMARY OF QUANTITIES

CODE NO.	ITEM LOCATION OF WORK CONSTRUCTION TYPE CODE X031	UNIT	ALTERNATE A QUANTITY	ALTERNATE B QUANTITY
010005	TREE REMOVAL, ACRES	ACRE	13.7	13.7
011001	EARTH EXCAVATION	CU.YD.	16,160	16,150
019001	SPECIAL EXCAVATION	CU.YD.	5,650	5,650
013001	BORROW EXCAVATION	CU.YD.	28,560	28,560
050001	CLASS A EXCAVATION FOR STRUCTURES	CU.YD.	306	306
050007	COFFERDAM PIER 2	EACH	2	2
050003	ROCK EXCAVATION FOR STRUCTURES	CU.YD.	189	189
050005	*COFFERDAM EXCAVATION	CU.YD.	5609	5609
050008	COFFERDAM PIER 3	EACH	2	2
050009	COFFERDAM PIER 4	EACH	2	2
050010	COFFERDAM PIER 5	EACH	2	2
050011	COFFERDAM PIER 6	EACH	2	2
050012	COFFERDAM PIER 7	EACH	2	2
052002	CLASS A CONCRETE	CU.YD.	3,486.1	3,486.1
052003	CLASS X CONCRETE	CU.YD.	9,776.0	7,760.8
052009	SEAL COAT CONCRETE	CU.YD.	3,836.0	3,836.0
052016	CLASS X CONCRETE (HEADWALL)	CU.YD.	15.3	15.3
052021	PROTECTIVE COAT	SQ.YD.	17,950	17,950
044001	FURNISHING AND ERECTING STRUCTURAL STEEL	LBS.	6,210,190	6,210,190
058200	PIPE CULVERT, TYPE 1, 18"	LIN.FT.	48	48
058007	PIPE CULVERT, TYPE 1A, 24"	LIN.FT.	258	258
059001	REINFORCEMENT BARS	LBS.	2,246,610	2,118,970
060005	FURNISHING CREOSOTED PILES 20.1 TO 30 FT.	LIN.FT.	550	550
060006	DRIVING TIMBER PILES	LIN.FT.	550	550
060014	FURNISHING METAL PILE SHELLS 12"	LIN.FT.	1,200	1,200
060015	FURNISHING METAL PILE SHELLS 14"	LIN.FT.	29,850	2,530
060017	TEST PILE, METAL SHELL	EACH	10	6
060018	DRIVING AND FILLING SHELLS	LIN.FT.	27,050	3,730
060024	FURNISHING STEEL PILES 12 BP 53	LIN.FT.	7,352	7,352
060033	TEST PILE STEEL 12 BP 53	EACH	8	8
060037	DRIVING STEEL PILES	LIN.FT.	7,352	7,352
061001	NAME PLATES	EACH	2	2
082001	STONE RIPRAP	SQ.YD.	1,165	1,165
083003	SLOPEWALL, 6 INCH	SQ.YD.	1,925	1,925
091001	PAVED DITCH	LIN.FT.	550	550
112001	SODDING	SQ.YD.	160	160
L00006	CONDUIT IN TRENCH 2 IN. DIA. GALVANIZED STEEL	LIN.FT.	100	100
L00056	CONDUIT ATTACHED TO STRUCTURE 2 IN. DIA. GALVANIZED STEEL	LIN.FT.	1,540	1,540
L06300	TRENCH AND BACKFILL	LIN.FT.	100	100
L09505	MARINE NAVIGATION GREEN MID-CHANNEL RANGE LIGHT, PIVOT TYPE	EACH	2	2
L09513	MARINE NAVIGATION RED CHANNEL MARGIN LIGHT, PIVOT TYPE	EACH	4	4
106038	ELECTRIC CABLE IN CONDUIT, 600V, (NEOPRENE-RUBBER INSULATED)	1/C No. 6 LIN FT	3,400	3,400
200009	ALUMINUM HANDRAIL	LIN.FT.	10,803	10,803
106174	ELECTRIC CONDUCTOR IN CONDUIT, (BARE ANNEALED COPPER)	1/C No 6 LIN.FT	1,700	1,700
*201023	BRIDGE SEAT SEALANT	LUMP SUM	1	1
800406	SERVICE INSTALLATION TYPE A	EACH	1	1
060096	FURNISHING PRESTRESSED CONCRETE CYLINDER PILES	LIN.FT.	8,190	
060097	DRIVING PRESTRESSED CONCRETE CYLINDER PILES	LIN.FT.	8,190	
060098	PILE TEST LOADING	EACH	5	
201028	WOVEN WIRE FENCE	LIN.FT	1,669	1,669
+ 201390	ENGINEER'S FIELD OFFICE, TYPE "A"	EACH	1	1
+ 201399	ENGINEER'S FIELD OFFICE, TYPE "B"	EACH	1	1
+ 201379	ENGINEER'S FIELD LABORATORY	EACH	1	1

*Applied at E. & W. Abutments, Piers 4, 8, 12, 16, 20 and 24, each structure.

+ Construction Type Code "CE-58"

ALTERNATE A AND B CONSTRUCTION IS SIMILAR, EXCEPT IN THE TYPE OF CONSTRUCTION OF PIERS 9 THROUGH 27, AS SHOWN ON PLANS.

GENERAL NOTES

ALL ELEVATIONS ARE BASED ON 1929 UNITED STATES COAST AND GEODETIC SURVEY, GENERAL ADJUSTMENT.

CLASS X CONCRETE SHALL BE USED THROUGHOUT, EXCEPT CLASS A CONCRETE SHALL BE USED IN PIERS 1 THRU 8 (RIVER PIERS).

COARSE AGGREGATE USED IN PARAPET AND END POSTS SHALL BE FREE OF CHERT, FLINT, LIMONITE, LIGNITE AND SOFT SANDSTONE.

SUPERSTRUCTURE SLAB SHALL BE FINISHED IN ACCORDANCE WITH ARTICLE 58.10 OF THE STANDARD SPECIFICATIONS.

CONCRETE SLOPEWALL SHALL BE REINFORCED WITH WELDED WIRE FABRIC 6"x6" MESH, WEIGHING 58# PER 100 SQ.FT.

LAYOUT OF SLOPE WALLS AND RIPRAP MAY BE VARIED TO SUIT GROUND CONDITIONS IN THE FIELD AS DIRECTED BY THE ENGINEER.

ALL REINFORCEMENT BARS SHALL BE LAPPED 20 DIAMETERS UNLESS OTHERWISE SHOWN.

ALL CONCRETE CORNERS SHALL HAVE A STANDARD 3/4" CHAMFER UNLESS OTHERWISE SHOWN OR NOTED.

RIVETS SHALL BE 3/4" ϕ IN 13/16" ϕ HOLES, EXCEPT AS NOTED.

ALL STRUCTURAL STEEL SHALL MEET THE REQUIREMENTS FOR A.S.T.M. A36 EXCEPT AS NOTED.

GIRDERS SHALL BE ASSEMBLED IN THE SHOP IN PROPER POSITION AND SHALL BE ASSEMBLED FOR SHOP INSPECTION BEFORE PAINTING.

ALL STRUCTURAL STEEL, EXCEPT AS OTHERWISE PROVIDED, SHALL RECEIVE ONE (1) SHOP COAT OF RED LEAD PAINT AND TWO (2) FIELD COATS OF ALUMINUM PAINT. SEE ARTICLE 56.1 TO 56.5 INCLUSIVE OF THE STANDARD SPECIFICATIONS.

ANCHOR BOLTS SHALL BE SET BEFORE ATTACHING CROSS FRAMES AND DIAPHRAGMS OVER ABUTMENTS AND PIERS.

ROADWAY EXPANSION GUARDS SHALL BE ASSEMBLED IN THE SHOP IN PROPER POSITION WITH THE ENDS IN PLACE AND SHALL BE LEFT ASSEMBLED FOR SHOP INSPECTION.

FINGER PLATES SHALL BE FLAME CUT AS PROVIDED IN ARTICLE 56.5(1) OF THE STANDARD SPECIFICATIONS.

THE EXPOSED SURFACES OF THE EXPANSION GUARDS SHALL BE GIVEN TWO SHOP COATS OF RED LEAD PAINT; THE CONTACT SURFACES SHALL BE GIVEN ONE COAT OF RED LEAD PAINT. ANCHOR STUDS SHALL NOT BE PAINTED.

ALL ROCKERS, BEARING PLATES, MASONRY PLATES, PINTLES, ANCHOR BOLTS, BOLTS AND NUTS, LEAD PLATES, SHIM PLATES AND ALL PARTS OF EXPANSION GUARDS SHALL BE SET IN ACCORDANCE WITH ARTICLE 51.13 AND ARTICLE 51.15 OF THE STANDARD SPECIFICATIONS.

TEST PILES SHALL BE DRIVEN IN PERMANENT LOCATIONS AS SHOWN ON THE PLANS OR AS DIRECTED BY THE ENGINEER BEFORE ORDERING THE REMAINDER OF THE PILES.

PILES AT THE EAST ABUTMENT SHALL BE DRIVEN IN HOLES PRECORED THROUGH THE EMBANKMENT IN ACCORDANCE WITH ARTICLE 60.9(c) OF THE STANDARD SPECIFICATIONS.

LATERAL BRACING OR CROSS FRAMES SHALL NOT BE USED TO SUPPORT FORMWORK.

ALL OIL PIPE LINES, GAS PIPE LINES AND POWER LINES TO BE RELOCATED BY OTHERS.

Permanent forms will not be permitted in forming the concrete floor.

TWO (2) CONSTRUCTION IDENTIFICATION SIGNS AS SHOWN ON SHEET 86 SHALL BE ERECTED AS DIRECTED BY THE ENGINEER.

ALL EXCESS SUITABLE EXCAVATION, AS DETERMINED BY THE ENGINEER, SHALL BE INCORPORATED INTO THE BRIDGE CONES, AS DIRECTED BY THE ENGINEER.

*Cofferdam Excav. shall be measured in the field from the existing ground to the required base elevation.

CONSOER, TOWNSEND & ASSOCIATES
CONSULTING ENGINEERS CHICAGO, ILLINOIS

ILLINOIS DIVISION OF HIGHWAYS
FAI ROUTE 64 BRIDGE OVER WABASH RIVER
F.A.I. 64 SECTION 97-38
WHITE COUNTY, ILLINOIS
POSEY COUNTY, INDIANA

INDEX & SUMMARY OF QUANTITIES

DESIGNED	DRAWN	TRACED	CHECKED	SUBMITTED	DATE	SHEET
	A.S.	A.S.	O.M.P.			

FOR INFORMATION ONLY

Rev. 9-8-64 Added Sheets 2A, 2B & 2C

Rev. 8/26/64 N.M.O. Added Item Woven Wire Fence 8ft Lin. Ft, added Std 2169-1.

Rev. N.M.O. 4/8/66 Rev 2-24-66 JTR - Cofferdam Exc. changed from 10,378 to 5609 cu.yd. - Note added.

F.A.I. RTE. NO.	SECTION	COUNTY	TOTAL SHEETS	SHEET NO.
64	97-3B	White	103	6
FEDERAL ROAD DISTRICT NO.		ILLINOIS	FED.	

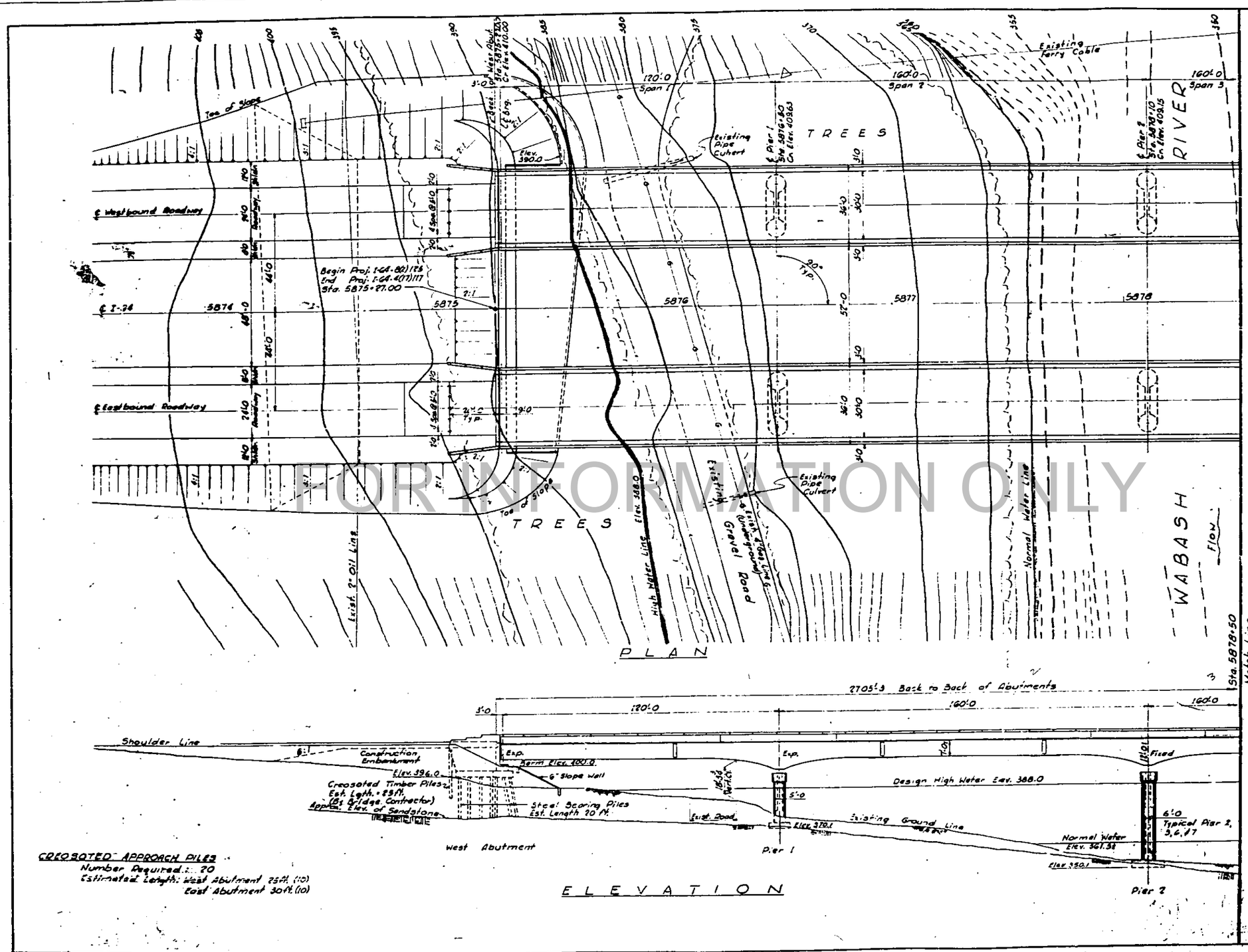

FOR INFORMATION ONLY

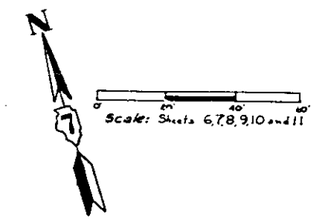

WATERWAY INFORMATION

Drainage Area	29,000 Sq. Mi
Waterway Provided Below Design High Water	60,000 Sq. Ft.

DESIGN CRITERIA

Design Specification:
A.A.S.H.O. "Standard Specifications for Highway Bridges"

Construction Specification:
Illinois Division of Highways "Standard Specifications for Road and Bridge Construction" 1958 and Supplemental Specifications in effect.

Live Load: HS20 & AM

Allowable Stresses:
Concrete:
$f_c' = 3500$ psi
$f_c = 1400$ psi (above ground)
$f_c = 1000$ psi (under ground)
Reinforcing Steel: $f_s = 20000$ psi
Structural Steel:
ASTM A-36 and ASTM A-441
as per Design Specifications

CONSOER, TOWNSEND & ASSOCIATES
CONSULTING ENGINEERS CHICAGO, ILLINOIS

ILLINOIS DIVISION OF HIGHWAYS
FAI ROUTE 64 BRIDGE OVER WABASH RIVER
F.A.I. 64 SECTION 97-3B
WHITE COUNTY, ILLINOIS
POSEY COUNTY, INDIANA

GENERAL PLAN

F.A.I. RTE. NO.	SECTION	COUNTY	TOTAL SHEETS	SHEET NO.
64	97 38	White	103	7
FEDERAL ROAD DISTRICT NO.		ILLINOIS		

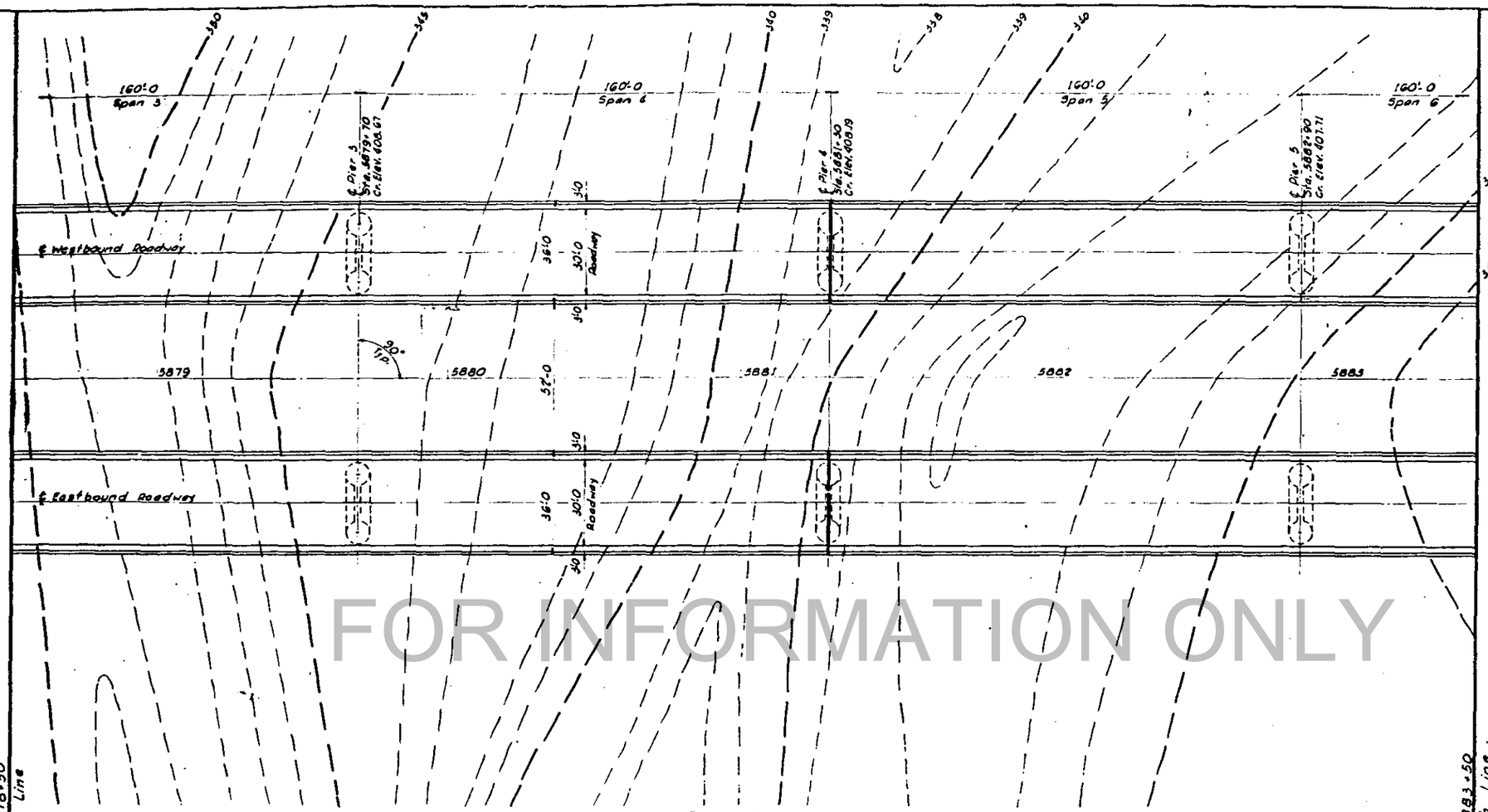

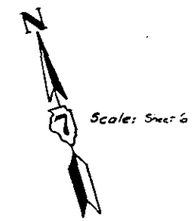

FOR INFORMATION ONLY

CONSOER, TOWNSEND & ASSOCIATES
CONSULTING ENGINEERS CHICAGO, ILLINOIS

ILLINOIS DIVISION OF HIGHWAYS
FAI ROUTE 64 BRIDGE OVER WABASH RIVER
F.A.I. 64 SECTION 97-38
WHITE COUNTY, ILLINOIS
POSEY COUNTY, INDIANA

GENERAL PLAN

FAI RTE. NO.	SECTION	COUNTY	TOTAL SHEETS	SHEET NO.
64	97-3B	White	103	8
FEDERAL HIGHWAY DISTRICT NO.		PLANNED	FINAL	

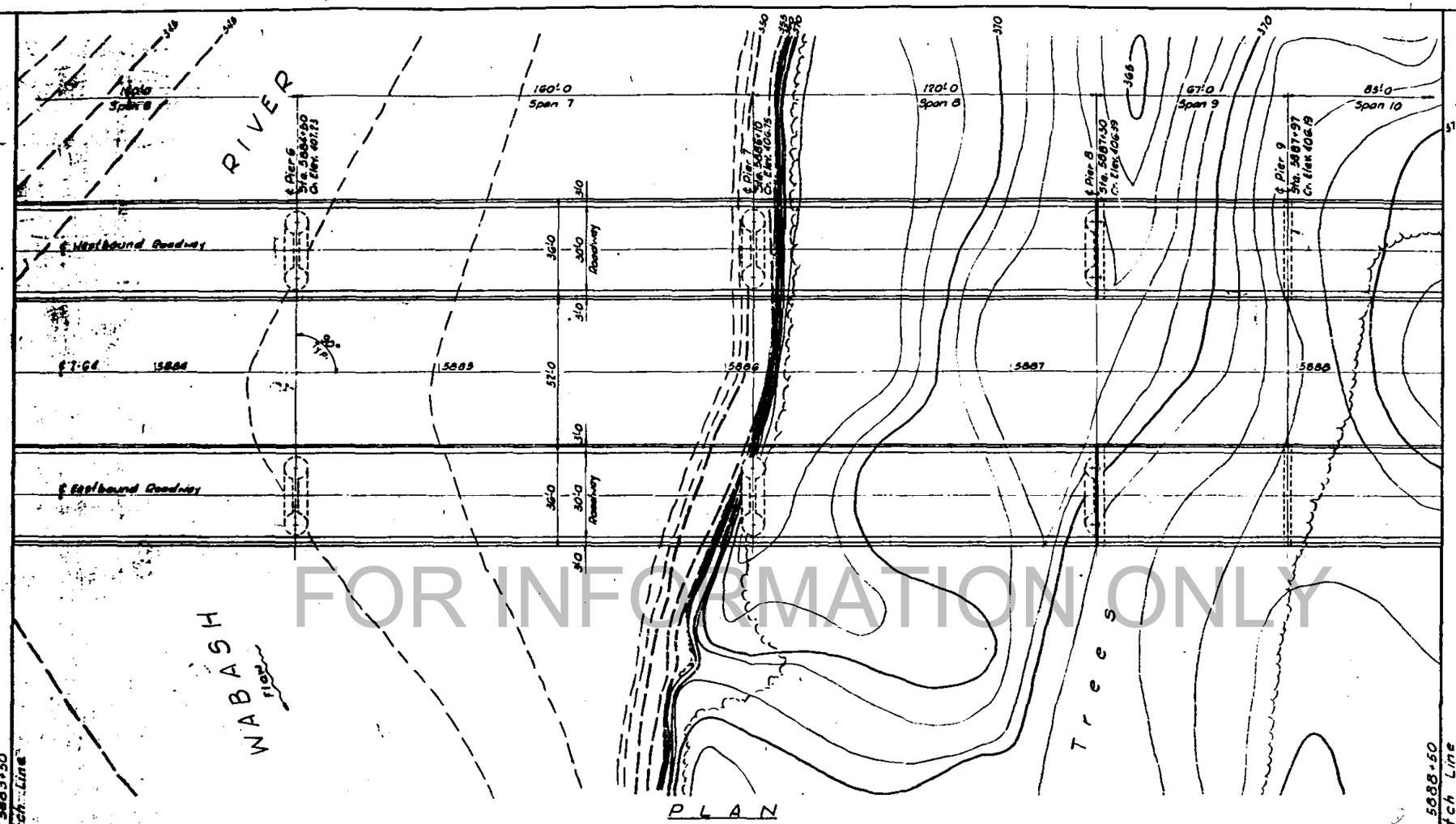

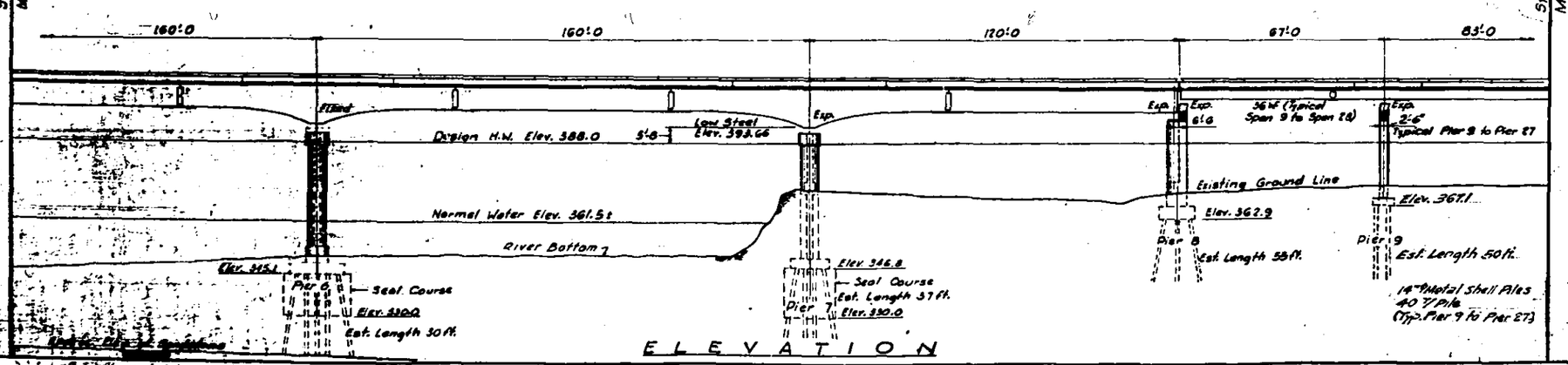

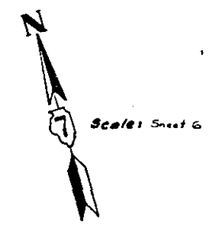

CONSOER, TOWNSEND & ASSOCIATES
CONSULTING ENGINEERS CHICAGO, ILLINOIS

ILLINOIS DIVISION OF HIGHWAYS
FAI ROUTE 64 BRIDGE OVER WABASH RIVER
E.A.I. 64 SECTION 97-3B
WHITE COUNTY, ILLINOIS
POSEY COUNTY, INDIANA

GENERAL PLAN

FOR INFORMATION ONLY

F.A.I. RTE. NO.	SECTION	COUNTY	TOTAL SHEETS	SHEET NO.
64	97-3B	White	103	9
PROJECT NO.		ILLINOIS	FED. AID	

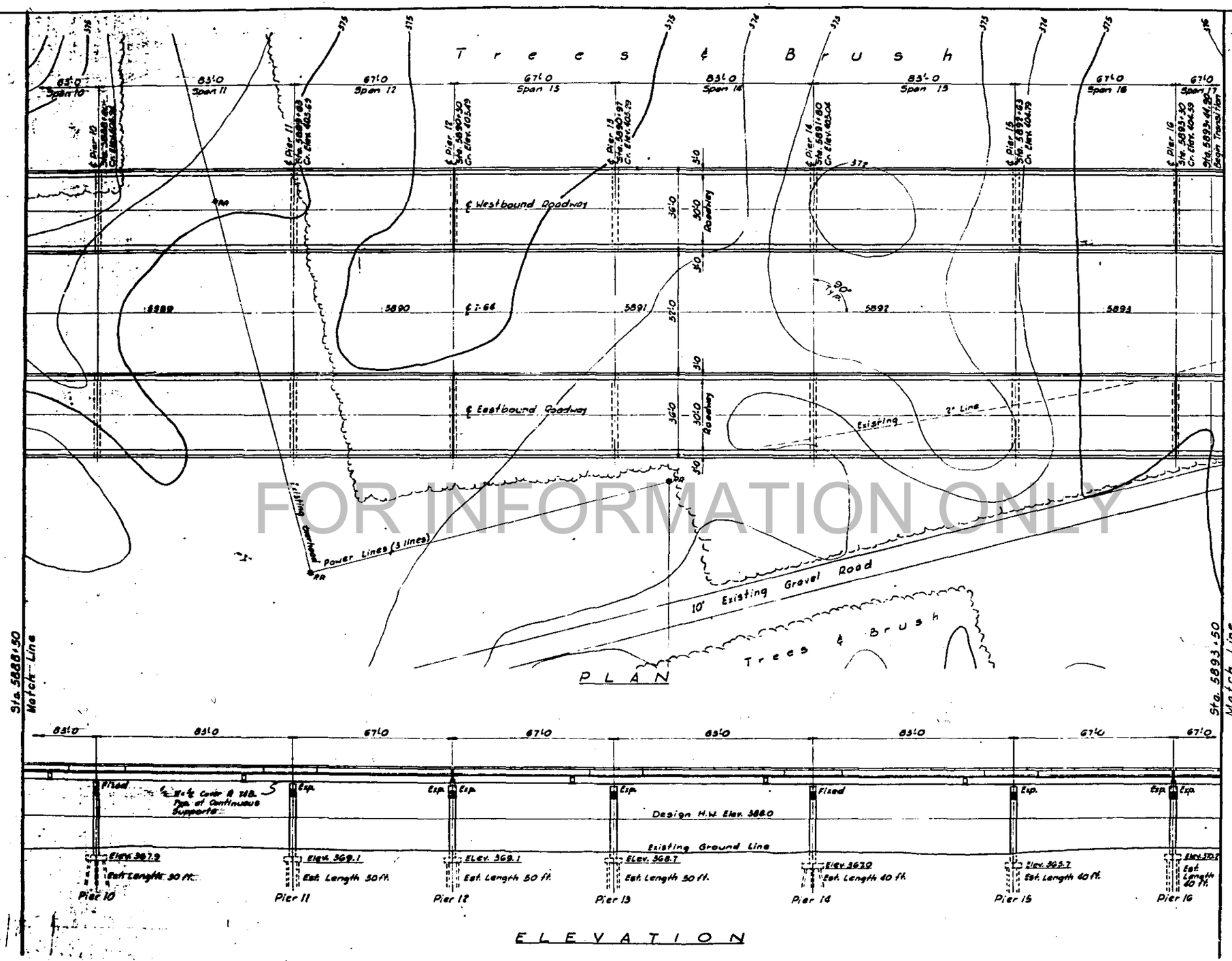

FOR INFORMATION ONLY

Scale: Sheet 6

CONSOER, TOWNSEND & ASSOCIATES
CONSULTING ENGINEERS CHICAGO, ILLINOIS

ILLINOIS DIVISION OF HIGHWAYS
FAI ROUTE 64 BRIDGE OVER WABASH RIVER
F.A.I. 64 SECTION 97-3B
WHITE COUNTY, ILLINOIS
POSEY COUNTY, INDIANA

GENERAL PLAN

F.A.I. RTE. NO.	SECTION	COUNTY	TOTAL SHEETS	SHEET NO.
64	97-38	White	103	10
FEDERAL ROAD DISTRICT NO.		ILLINOIS	FED. AID PROJ.	

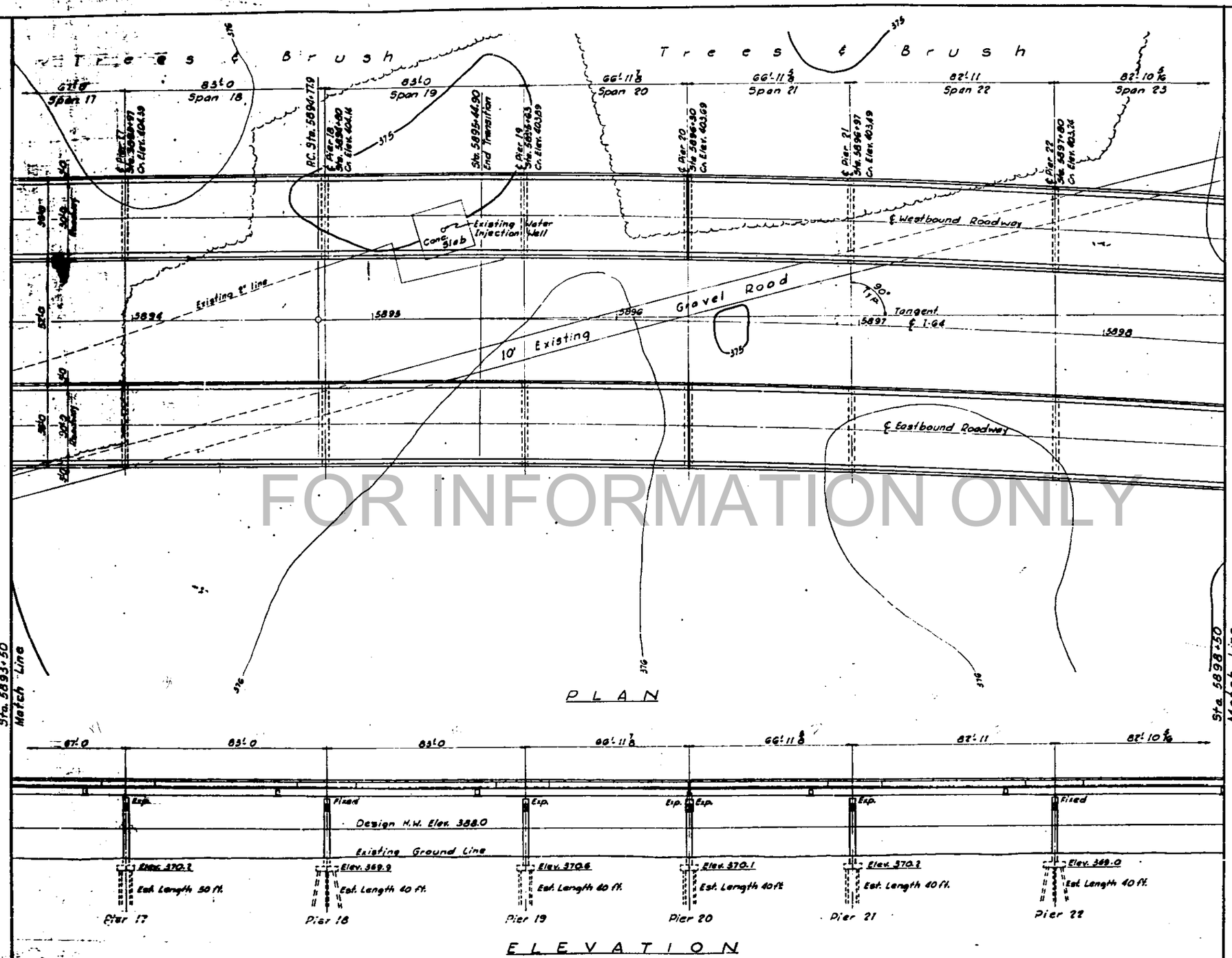

FOR INFORMATION ONLY

CURVE DATA

D	1° 00'00"
Δ	22° 11'00"
R	5730.0'
T	1125.3'
L	2218.3'
E	109.0'
SE	0.098%
P.I.	STA. 5906+01.2

CONSOER, TOWNSEND & ASSOCIATES
CONSULTING ENGINEERS — CHICAGO, ILLINOIS

ILLINOIS DIVISION OF HIGHWAYS
FAI ROUTE 64 BRIDGE OVER WABASH RIVER
F.A.I. 64 SECTION 97-38
WHITE COUNTY, ILLINOIS
POSEY COUNTY, INDIANA

GENERAL PLAN

F.A.I. RTE. NO.	SECTION	COUNTY	TOTAL SHEETS	SHEET NO.
64	97-38	White	103	11
PROJECT NO.		ILLINOIS	FINAL	

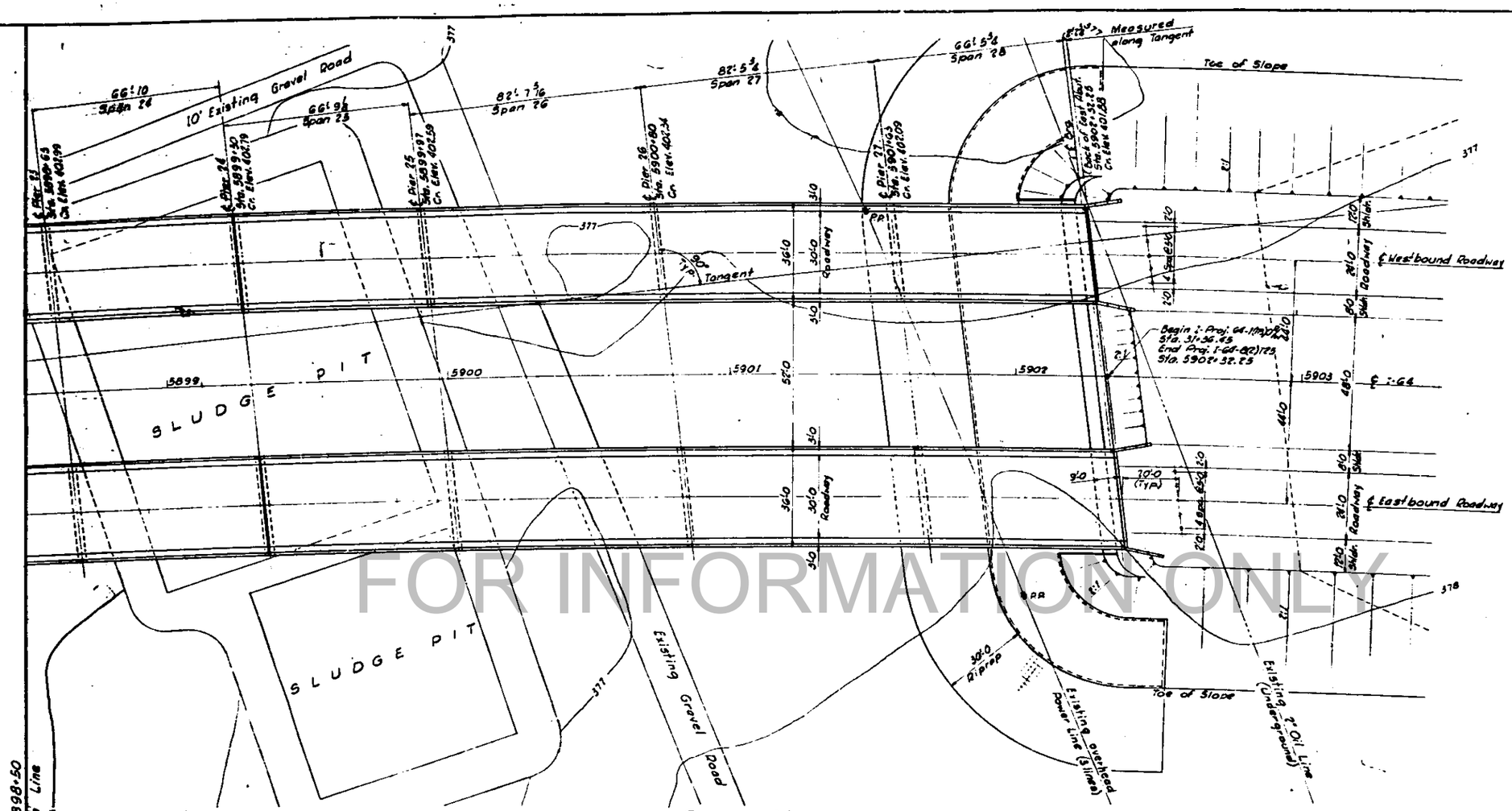

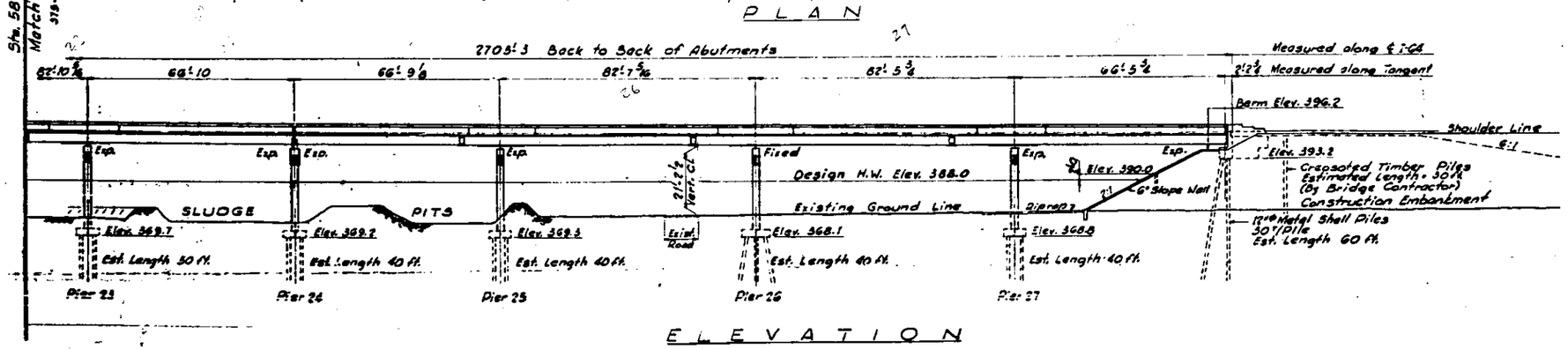

FOR INFORMATION ONLY

CONSOER, TOWNSEND & ASSOCIATES
CONSULTING ENGINEERS CHICAGO, ILLINOIS

ILLINOIS DIVISION OF HIGHWAYS
FAI ROUTE 64 BRIDGE OVER WABASH RIVER
F.A.I. 64 SECTION 97-38
WHITE COUNTY, ILLINOIS
POSEY COUNTY, INDIANA

GENERAL PLAN

F.A.I. RTE. NO.	SECTION	COUNTY	TOTAL SHEETS	SHEET NO.
64	97-3B	White	103	12
ILLINOIS DEPT. OF TRANSPORTATION			ALL FEDERAL FUNDS	PROJ.

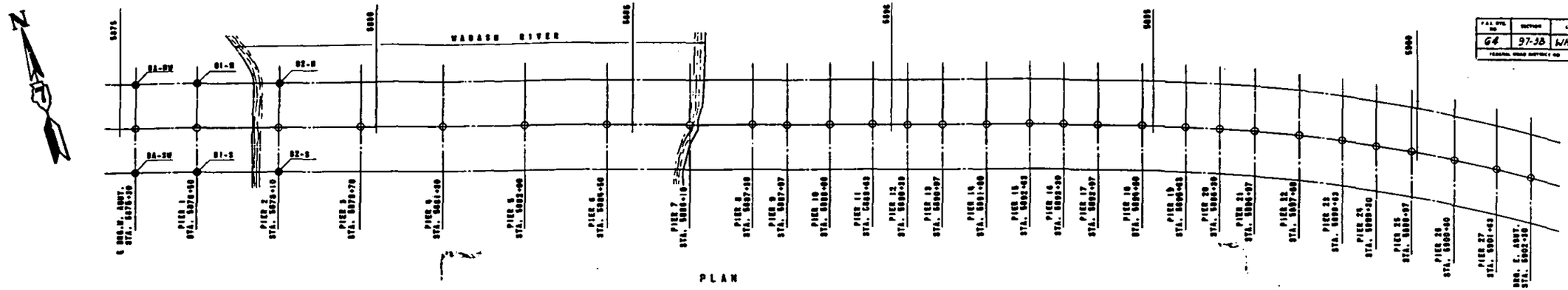

PLAN

BORING NO.	BA-NW	BA-SW	B1-N	B1-S	B2-N	B2-S
STATION	5875+30	5875+30	5878+50	5878+50	5878+10	5878+10
OFFSET	66' LT.	66' RT.	66' LT.	66' RT.	76' LT.	66' RT.
GROUND ELEV.	389.6	389.6	373.2	373.6	353.0	352.5

Elev.	BA-NW Sample No.	BA-NW Elev.	BA-NW Description	BA-SW Sample No.	BA-SW Elev.	BA-SW Description	B1-N Sample No.	B1-N Elev.	B1-N Description	B1-S Sample No.	B1-S Elev.	B1-S Description	B2-N Sample No.	B2-N Elev.	B2-N Description	B2-S Sample No.	B2-S Elev.	B2-S Description
400																		
390		388.6	GROUND SURFACE		389.6	GROUND SURFACE		373.2	GROUND SURFACE		373.6	GROUND SURFACE		353.0	GROUND SURFACE		352.5	GROUND SURFACE
		387.6	MEDIUM BROWN TOPSOIL		387.6	MEDIUM BROWN TOPSOIL		371.7	MEDIUM BROWN TOPSOIL		371.1	MEDIUM GRAY SANDY CLAY SHALE						
380	1		16	1		50												
	2	379.9	22	2		50												
	3	379.9	54		378.9													
370	4	378.2		3	377.9	52												
	5		13/25	4		13/25												
	6	366.2	13/25	5	367.9	13/25												
360											361.1	VERY DENSE GRAY SANDY CLAY SHALE			VERY DENSE GRAY SANDY CLAY SHALE			
350								320.7						348.0	RIVER BOTTOM		352.5	RIVER BOTTOM
														346.0	ROCK			
340													1	340%	VERY DENSE GRAY LIMESTONE AND SANDY CLAY SHALE	1	120%	VERY DENSE GRAY LIMESTONE WITH LAYERS OF VERY DENSE GRAY SANDY CLAY SHALE
													2	340.0		2	340.0	
																3	120%	
											375.6	MEDIUM BROWN TOPSOIL						
																4	351.5	

END OF BORING
DEPTH OF BORING 27.2'

END OF BORING
DEPTH OF BORING 27.64'

END OF BORING
DEPTH OF BORING 22.2'

END OF BORING
DEPTH OF BORING 12.5'

END OF BORING
DEPTH OF BORING 0.0'

END OF BORING
DEPTH OF BORING 0.0'

FOR INFORMATION ONLY

CONSOER, TOWNSEND & ASSOCIATES
CONSULTING ENGINEERS CHICAGO, ILLINOIS

ILLINOIS DIVISION OF HIGHWAYS
FAI ROUTE 64 BRIDGE OVER WABASH RIVER
F.A.I. 64 SECTION 97-3B
WHITE COUNTY, ILLINOIS
POSEY COUNTY, INDIANA

BORING LOGS

DESIGNED	DRAWN	TRACED	CHECKED	REVISED	DATE	REVISED
CAM	CAM	CAM				

PLATE 2 - PLAN - PROFILE D.P.F. & E.E. STANDARD
HOUPES & KIDDER CO., NEW YORK
E.E. Dn. No. 348-06

F.A.I. RTE. NO.	SECTION	COUNTY	TOTAL SHEETS	SHEET NO.
64	97-38	White	103	13
FEDERAL ROAD DISTRICT NO.		STATE ROUTE	FISCAL	

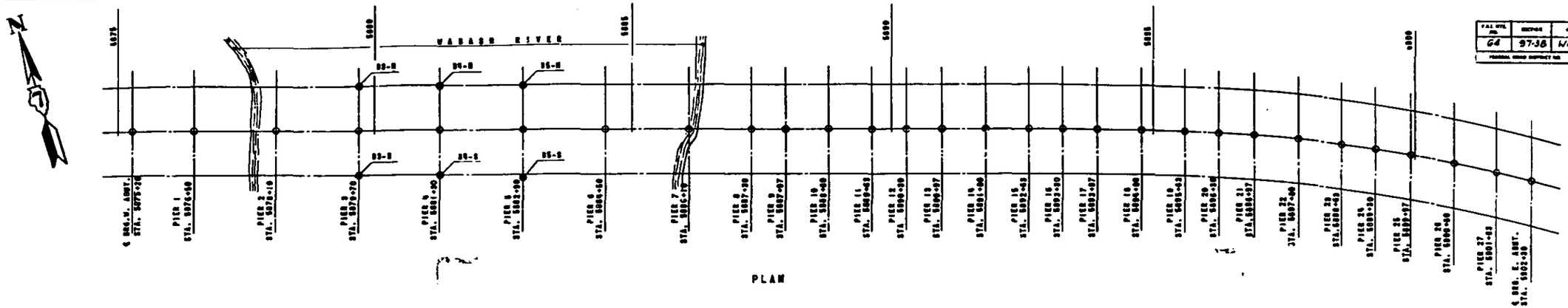

PLAN

BORING NO.	B3-B	B3-S	B4-B	B4-S	B5-B	B5-S
STATION	5879+70	5879+70	5881+30	5881+30	5882+90	5882+90
OFFSET	44' LT.	44' RT.	44' LT.	44' RT.	44' LT.	44' RT.
GROUND ELEV.	396.5	395.0	392.2	393.2	390.1	396.2

FOR INFORMATION ONLY

BORING NO.	SAMPLE NO.	EL.	N	DESCRIPTION
B3-B		396.5		RIVER BOTTOM
		394.5		RIVER BOTTOM ROCK
	1	336.5	8	LOOSE GRAY SAND WITH OCCASIONAL SHALE GRAVEL
	2		50/2	VERY DENSE GRAY SANDSTONE
	2	330.5	50/5	
				℄ END OF BORING DEPTH OF BORING = 16.0'
B3-S		395.0		RIVER BOTTOM
	W			
	1		3/50/5	VERY DENSE GRAY SANDSTONE
	2		50/5	
	3	336.0	50/5	
				℄ END OF BORING DEPTH OF BORING = 16.0'
B4-B		392.2		RIVER BOTTOM
		382.2		RIVER BOTTOM ROCK
		372.2		RIVER BOTTOM SAND
	1		6	LOOSE GRAY SAND WITH OCCASIONAL SHALE GRAVEL
	2		5	
	3	361.7	8	
	4		3	VERY LOOSE GRAY SAND WITH OCCASIONAL SHALE GRAVEL
	5	351.7	2	
	6		3/50/5	VERY DENSE GRAY SANDSTONE
	7	341.7	50/5	
				℄ END OF BORING DEPTH OF BORING = 26.5'
B4-S		393.2		RIVER BOTTOM
		391.7		RIVER BOTTOM ROCK
	1	336.7	4	LOOSE GRAY SAND WITH OCCASIONAL SHALE GRAVEL
	2		5	VERY LOOSE GRAY SAND WITH OCCASIONAL SHALE GRAVEL
	3	336.7	8	
	4		4	LOOSE GRAY SAND WITH OCCASIONAL SHALE GRAVEL
	5	331.7	4	
	6		14	MEDIUM GRAY SAND WITH OCCASIONAL SHALE GRAVEL
	7	326.7	50/5	VERY DENSE GRAY SANDSTONE
	8	311.7	50/5	
				℄ END OF BORING DEPTH OF BORING = 32.5'
B5-B		390.1		RIVER BOTTOM
		382.0		RIVER BOTTOM ROCK
		380.0		VERY LOOSE GRAY SILTY SAND
	1		4	LOOSE GRAY SAND, SANDY SILT WITH OCCASIONAL SHALE GRAVEL
	2	361.0	6	
				MEDIUM GRAY SILT, BROWN SAND WITH OCCASIONAL SHALE GRAVEL
	4	320.0	11	
	5		4	LOOSE GRAY SILT, BROWN SAND WITH OCCASIONAL SHALE GRAVEL
	6	322.0	14	
	7	310.0	12	
	8		50/5	VERY DENSE GRAY SANDSTONE
	9	312.0	50/5	
				℄ END OF BORING DEPTH OF BORING = 30.0'
B5-S		396.2		RIVER BOTTOM
		392.7		SAND
	1		8	LOOSE GRAY SAND WITH OCCASIONAL SHALE GRAVEL
	2		7	
	3		6	
	4		6	
	5	336.7	8	
	6		12	MEDIUM GRAY SAND WITH OCCASIONAL SHALE GRAVEL
	7	319.7	50/5	
	8	319.7	50/5	
	9	312.7	50/5	
				℄ END OF BORING DEPTH OF BORING = 32.0'
	W	315.7		VERY DENSE GRAY SANDY CLAY SHALE
	X	313.7		VERY DENSE GRAY SA WITH DARK GRAY, BLACK SHALE

PROFILE

PLAN

CONSOER, TOWNSEND & ASSOCIATES
CONSULTING ENGINEERS CHICAGO, ILLINOIS

ILLINOIS DIVISION OF HIGHWAYS
FA: ROUTE 64 BRIDGE OVER WABASH RIVER
F.A.I. 64 SECTION 97-38
WHITE COUNTY, ILLINOIS
POSEY COUNTY, INDIANA

BORING LOGS

DESIGNED	DRAWN	TRACED	CHECKED	SUPERVISED	DATE	APPROVED
CAM	CAM	CAM				

PLATE 1-PLAN-PROFILE G.P.R.&R.E. STANDARD
REUFFEL & ESSER CO. NEW YORK

F.A.I. RTE. NO.	SECTION	COUNTY	TOTAL SHEETS	SHEET NO.
64	97-3B	White	103	14
FEDERAL AID PROJECT NO.		ILLINOIS	PROJ.	

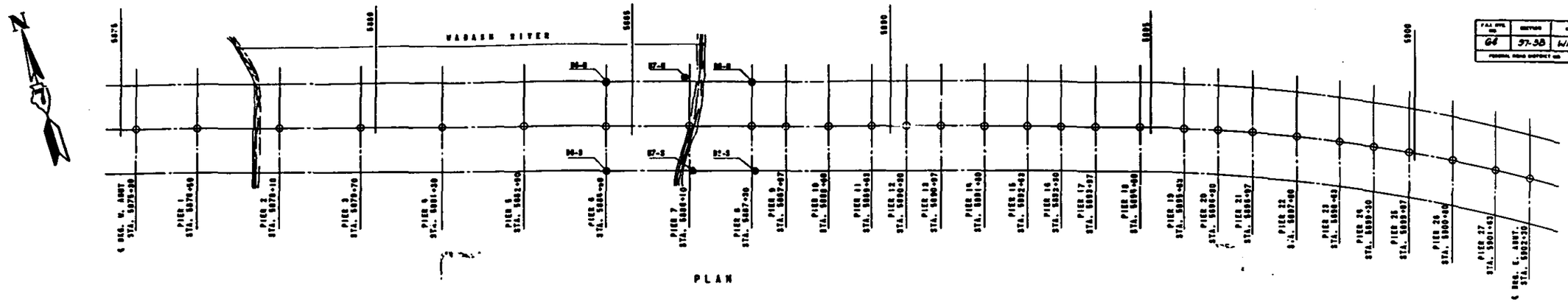

PLAN

BORING NO.	B6-2	B6-3	B7-2	B7-3	B8-2	B8-3
STATION	5884+50	5884+50	5886+00	5886+15	5887+30	5887+35
OFFSET	46' LT.	46' RT.	46' LT.	46' RT.	46' LT.	46' RT.
GROUND ELEV.	351.3	348.2	352.2	372.6	365.7	372.0

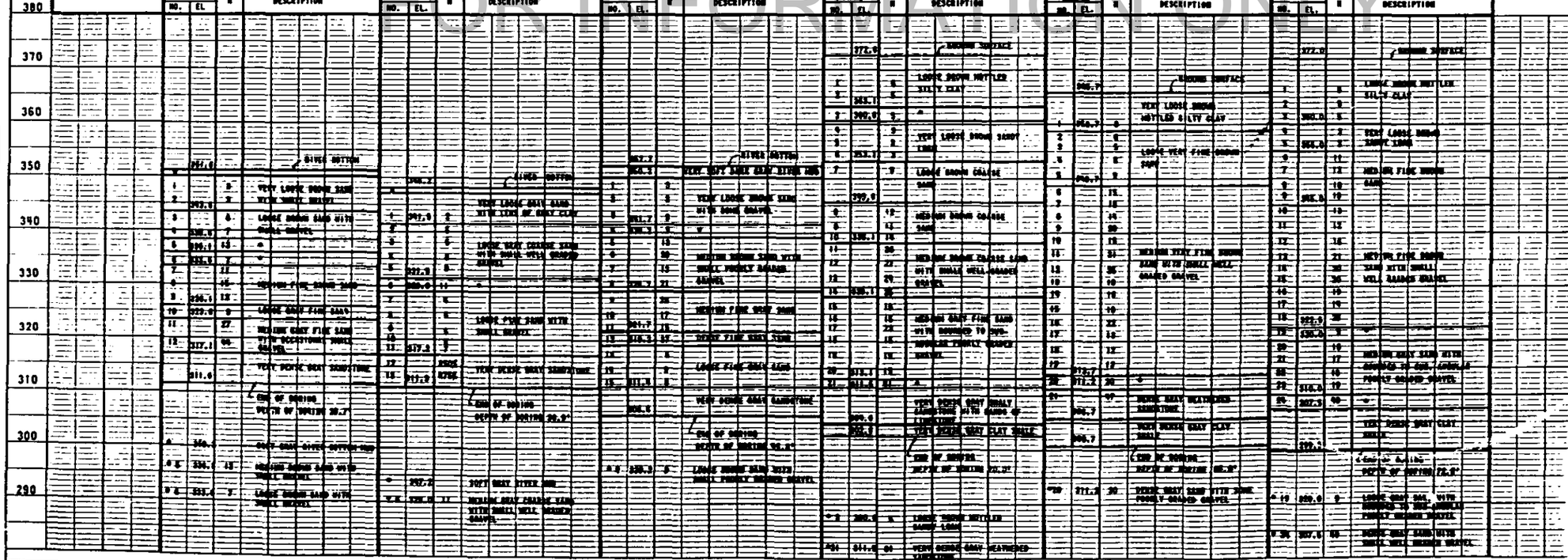

FOR INFORMATION ONLY

CONSOER, TOWNSEND & ASSOCIATES
CONSULTING ENGINEERS CHICAGO, ILLINOIS

ILLINOIS DIVISION OF HIGHWAYS
F.A.I. ROUTE 64 BRIDGE OVER WABASH RIVER
F.A.I. 64 SECTION 97-3B
WHITE COUNTY, ILLINOIS
POSEY COUNTY, INDIANA

BORING LOGS

CHK CHK CHK

PLATE 1 - PLAN - PROFILE G.P.O. S.R.E. STANDARD
MEMPHIS & LORAIN CO., NEW YORK

F.A.I. RTE. NO.	SECTION	COUNTY	TOTAL SHEETS	SHEET NO.
64	97-3B	White	103	15
FEDERAL ROAD DISTRICT NO.	ILLINOIS	FUNDS		

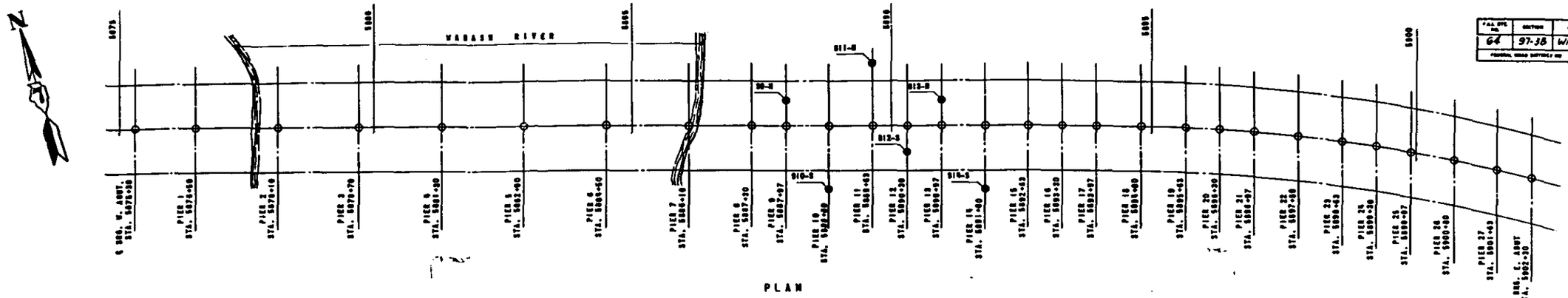

PLAN

BORING NO	B9-B	B10-S	B11-B	B12-S	B13-B	B14-S
STATION	5887+97	5888+80	5889+63	5890+30	5890+97	5891+80
OFFSET	27' LT.	62' RT.	62' LT.	27' RT.	27' LT.	62' RT.
GROUND ELEV.	372.6	376.9	375.5	375.6	376.9	376.6

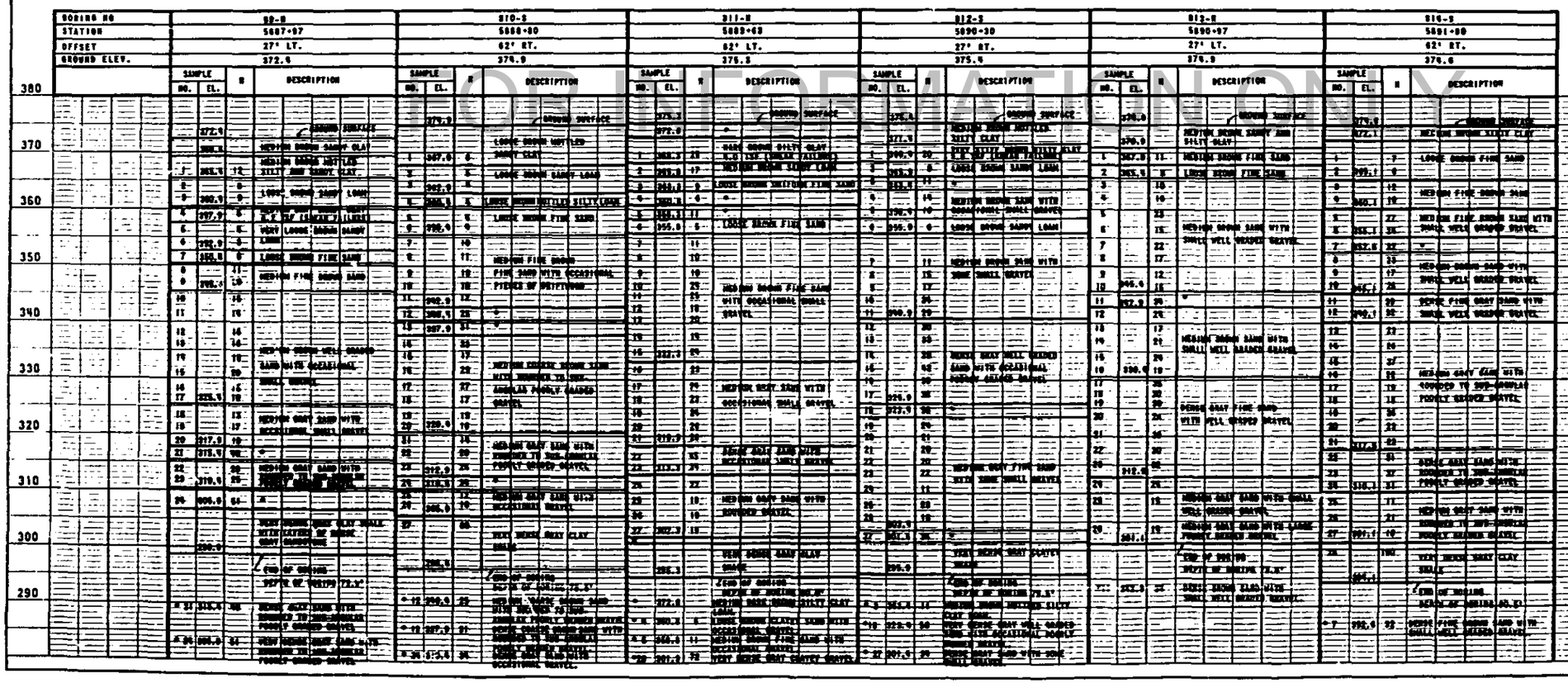

FOR INFORMATION ONLY

CONSOER, TOWNSEND & ASSOCIATES
CONSULTING ENGINEERS CHICAGO, ILLINOIS

ILLINOIS DIVISION OF HIGHWAYS
FAI ROUTE 64 BRIDGE OVER WABASH RIVER
F.A.I. 64 SECTION 97-3B
WHITE COUNTY, ILLINOIS
POSEY COUNTY, INDIANA

BORING LOGS

PLATE 1 - PLAN-PROFILE U.P.R.R.R.E. Standard
HUMPHREY & KIDDER CO., NEW YORK

F.A.I. RTE. NO.	SECTION	COUNTY	TOTAL SHEETS	SHEET NO.
64	97-38	White	103	16
FEDERAL AID PROJECT NO.		FILE NAME	PROJECT	

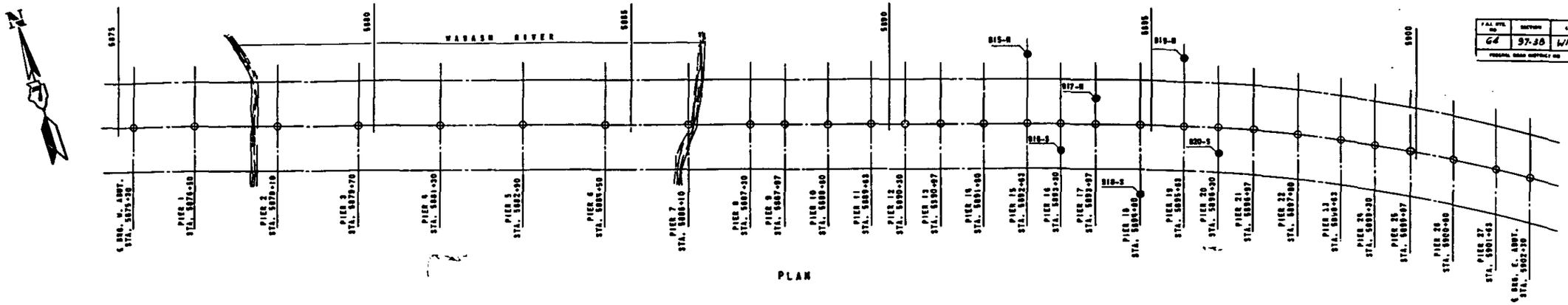

PLAN

BORING NO.	B15-N	B16-S	B17-N	B18-S	B19-N	B20-S
STATION	5892+63	5893+30	5893+97	5894+60	5895+63	5896+30
OFFSET	62' LT.	27' RT.	27' LT.	62' RT.	62' LT.	28' RT.
GROUND ELEV.	373.8	375.7	376.2	376.2	375.0	376.1

FOR INFORMATION ONLY

B15-N

SAMPLE NO.	EL.	N	DESCRIPTION
	373.8		GROUND SURFACE
	370.8		MEDIUM BROWN SILTY CLAY
1	369.8	6	LOOSE BROWN SANDY LOAM
2		12	
3		19	MEDIUM BROWN COARSE SAND
4	360.8	14	
5		26	
6		28	
7		16	
8		16	* MEDIUM BROWN COARSE SAND
9		19	
9	350.8	15	
10	348.8	30	* DENSE BROWN SAND
11		18	
12	346.8	36	* MEDIUM BROWN SAND
13	345.8	50	* DENSE GRAY SAND
14		36	
15		36	
16	339.8	40	* MEDIUM GRAY SAND
17		25	
18	334.8	45	* DENSE GRAY SAND
19		30	
20	329.8	38	* DENSE GRAY SAND
21	328.8	25	* DENSE GRAY SAND
22	326.8	56	* DENSE GRAY SAND
23		25	
24		15	
25		28	* MEDIUM GRAY SAND
26	319.8	27	
27	314.8	50	* DENSE GRAY SAND
			END OF BORING DEPTH OF BORING 72.5'
31C	329.8	83	DENSE GRAY SAND WITH BOULDER TO 300-BOULDER POORLY GRADED GRAVEL

* WITH SMALL WELL GRADED GRAVEL

B16-S

SAMPLE NO.	EL.	N	DESCRIPTION
	375.7		GROUND SURFACE
	372.7		STIFF DARK BROWN SANDY SOIL
1	369.7	10	STIFF BROWN MOTTLED SILTY CLAY LOAM
2	368.2	6	LOOSE BROWN FINE SAND
3	366.7	10	MEDIUM BROWN FINE SAND
4	361.2	8	LOOSE BROWN FINE SAND
5		13	
6		17	MEDIUM BROWN SUB-ANGULAR
7		31	COARSE SAND
8	351.2	16	
9		19	
10		18	MEDIUM BROWN SAND WITH SMALL WELL GRADED GRAVEL
11	342.7	87	
12	341.2	22	*
13		50	
14		29	MEDIUM GRAY SAND WITH SMALL WELL GRADED GRAVEL
15		15	
16	331.2	18	
17		50	DENSE GRAY SAND WITH SMALL WELL GRADED GRAVEL
18	326.2	36	
19		19	
20		15	MEDIUM GRAY SAND WITH
21	319.7	38	SMALL WELL GRADED GRAVEL
22	316.2	26	*
23		28	
24		36	MEDIUM GRAY SAND WITH
25		18	SMALL WELL GRADED GRAVEL
26		25	
27		19	
28	304.7	21	
	296.7		VERY DENSE GRAY SANDSTONE
	295.7		VERY DENSE GRAY SANDSTONE WITH LAYERS OF GRAY SHALE
			END OF BORING DEPTH OF BORING 79.0'
32	341.2	32	DENSE GRAY SAND WITH SMALL WELL GRADED GRAVEL
33	316.2	34	DENSE GRAY SAND WITH SMALL WELL GRADED GRAVEL

B17-N

SAMPLE NO.	EL.	N	DESCRIPTION
	376.2		GROUND SURFACE
	373.7		LOOSE BROWN SANDY CLAY
1		6	
2		5	
3		7	
4		7	LOOSE BROWN FINE SAND
5		9	
6	356.7	7	
7		21	
8		15	MEDIUM FINE BROWN SAND
9		17	
10	340.7	18	
11		31	
12		31	DENSE BROWN SAND WITH WELL GRADED GRAVEL
13		45	
14	326.7	36	
15		18	
16		16	MEDIUM GRAY SAND WITH POORLY GRADED GRAVEL
17	321.2	15	
18	320.7	32	*
19		50	
20		17	
21		16	MEDIUM GRAY SAND WITH
22		27	POORLY GRADED GRAVEL
23		15	
24		29	
25		12	
26		22	
27	304.2	20	
28	301.2	31	*
	297.2		VERY DENSE GRAY SANDSTONE WITH LAYERS OF GRAY CLAY SHALE
			END OF BORING DEPTH OF BORING 79.0'
34	316.7	33	DENSE GRAY SAND WITH POORLY GRADED GRAVEL
35	302.2	31	DENSE GRAY SAND WITH POORLY GRADED GRAVEL

B18-S

SAMPLE NO.	EL.	N	DESCRIPTION
	376.2		GROUND SURFACE
	373.7		MEDIUM BROWN SILTY CLAY
1	369.2	19	
2		5	
3		8	LOOSE BROWN FINE SAND
4	364.7	9	
5		16	MEDIUM BROWN SAND WITH
6	356.7	19	SMALL WELL GRADED GRAVEL
7	354.2	30	*
8		25	
9		17	
10		18	MEDIUM BROWN SAND WITH
11		28	SMALL WELL GRADED GRAVEL
12		26	
13		17	
14			
15	336.7	19	
16		10	
17		16	MEDIUM GRAY SAND WITH SMALL
18		23	WELL GRADED GRAVEL
19	326.7	28	
20		34	DENSE GRAY SAND WITH SMALL
21	321.7	36	WELL GRADED GRAVEL
22		16	MEDIUM GRAY SAND WITH SMALL
23	316.7	29	WELL GRADED GRAVEL
24		40	DENSE GRAY SAND WITH SMALL
25		28	WELL GRADED GRAVEL
26		27	
27		26	MEDIUM GRAY SAND WITH
			SMALL WELL GRADED GRAVEL
28	306.7	28	
	297.2		*
			END OF BORING DEPTH OF BORING 79.0'
36		36	DENSE GRAY SAND WITH SMALL POORLY GRADED GRAVEL
37		36	DENSE GRAY SAND WITH SMALL POORLY GRADED GRAVEL
38		33	DENSE GRAY SAND WITH SMALL POORLY GRADED GRAVEL

B19-N

SAMPLE NO.	EL.	N	DESCRIPTION
	375.0		GROUND SURFACE
	371.0		OLD SUPP PIT FOR OIL WELL (ABANDONED)
1	368.0	6	LOOSE BROWN FINE SAND
2		21	
3		18	
4		16	MEDIUM BROWN FINE SAND
5		25	
6		19	
7		15	
8	350.5	19	
9		40	DENSE FINE BROWN SAND WITH
10	348.5	30	SMALL WELL GRADED GRAVEL
11	343.0	65	*VERY DENSE FINE BROWN SAND
12	340.5	29	*MEDIUM BROWN SAND
13	338.0	52	*VERY DENSE GRAY SAND
14		30	
15	333.0	30	*DENSE GRAY SAND
16	330.5	17	*MEDIUM GRAY SAND
17		30	*
18		30	
19		20	
20		12	MEDIUM GRAY SAND WITH
21		12	OCCASIONAL SMALL POORLY
22		24	GRADED GRAVEL
23		20	
24	319.5	29	
25	318.0	30	*
26		16	MEDIUM GRAY SAND WITH SMALL
27	302.0	12	POORLY GRADED GRAVEL
			VERY DENSE GRAY SANDSTONE
	296.0		LAYERS OF GRAY CLAY SHALE
			END OF BORING DEPTH OF BORING 79.0'
37		36	DENSE GRAY SAND WITH SMALL POORLY GRADED GRAVEL
38	308.0	33	DENSE GRAY SAND WITH SMALL POORLY GRADED GRAVEL

B20-S

SAMPLE NO.	EL.	N	DESCRIPTION
	376.1		GROUND SURFACE
	372.1		MEDIUM BROWN SANDY CLAY
1		5	
2		8	LOOSE BROWN SAND
3		8	
4	367.6	5	
5		16	
6		17	MEDIUM BROWN SAND WITH
7		16	SMALL WELL GRADED GRAVEL
8		22	
9	340.7		
10		50	DENSE GRAY SAND WITH SMALL
11	332.1		WELL GRADED GRAVEL
12			
13		20	MEDIUM GRAY SAND WITH SMALL
14		16	WELL GRADED GRAVEL
15	322.1		
16		47	VERY DENSE GRAY SAND
17			
18		27	
19		22	MEDIUM FINE GRAY SAND WITH LARGE POORLY GRADED GRAVEL
20	313.1		
21		19	
22		57	DENSE GRAY SAND WITH LARGE POORLY GRADED GRAVEL
23	308.1		
24		29	MEDIUM GRAY SAND WITH SMALL GRAVEL, LAYERS OF GRAY CLAY
25	307.9		
26			VERY DENSE GRAY SANDSTONE
27	296.1		
			END OF BORING DEPTH OF BORING 80.0'

* WITH SMALL WELL GRADED GRAVEL.

CONSOER, TOWNSEND & ASSOCIATES
CONSULTING ENGINEERS — CHICAGO, ILLINOIS

ILLINOIS DIVISION OF HIGHWAYS
FAI ROUTE 64 BRIDGE OVER WABASH RIVER
F.A.I. 64 SECTION 97-38
WHITE COUNTY, ILLINOIS
POSEY COUNTY, INDIANA

BORING LOGS

DESIGNED	DRAWN	TRACED	CHECKED	CHECKED	DATE	REVISED
CAP	CAP	CAP	[illegible]			

PLATE 1 PLAN-PROFILE G.P.T.S.F.E. STANDARD
HUPPES & FISTER CO., NEW YORK

F.A.I. RTE. NO.	SECTION	COUNTY	TOTAL SHEETS	SHEET NO.
64	97-3B	White	105	17
PROJECT NO.				

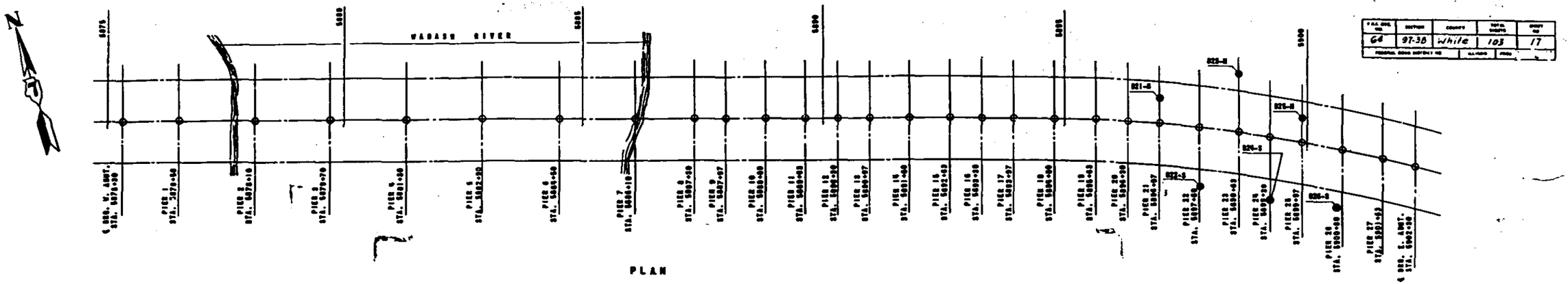

BORING NO.	B21-N	B22-S	B23-N	B24-S	B25-N	B26-S
STATION	5896+97	5897+30	5898+63	5899+30	5899+97	5900+75
OFFSET	50' RT.	50' RT.	50' LT.	67' LT.	30' LT.	60' RT.
GROUND ELEV.	375.3	376.1	375.9	378.6	377.6	377.9

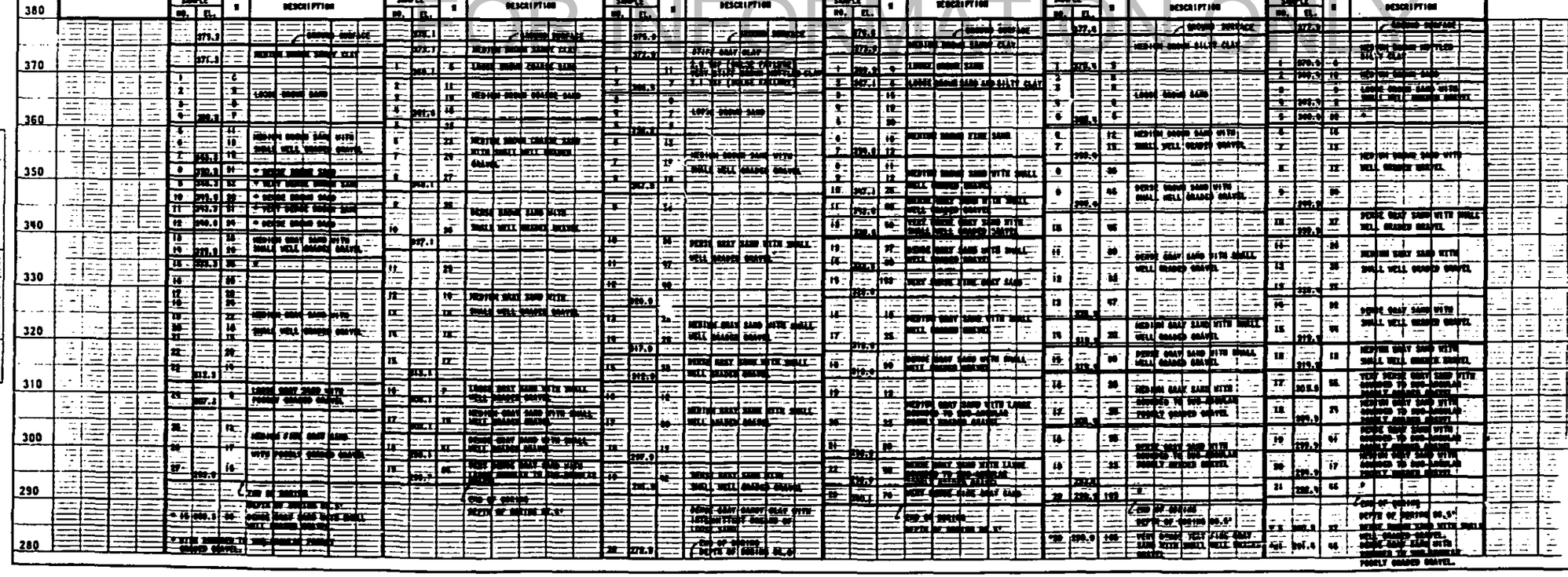

FOR INFORMATION ONLY

CONSOER, TOWNSEND & ASSOCIATES
CONSULTING ENGINEERS CHICAGO, ILLINOIS

ILLINOIS DIVISION OF HIGHWAYS
FAI ROUTE 64 BRIDGE OVER WABASH RIVER
F.A.I. 64 SECTION 97-3B
WHITE COUNTY, ILLINOIS
POSEY COUNTY, INDIANA

BORING LOGS

PLATE I - PLAN - PROFILE G.P.R.A.R.E. STANDARD

FAI RTE. NO.	SECTION	COUNTY	TOTAL SHEETS	SHEET NO.
64	97-38	White	103	18
FEDERAL ROAD DISTRICT NO.		ILLINOIS	FED. AID PROJECT NO.	

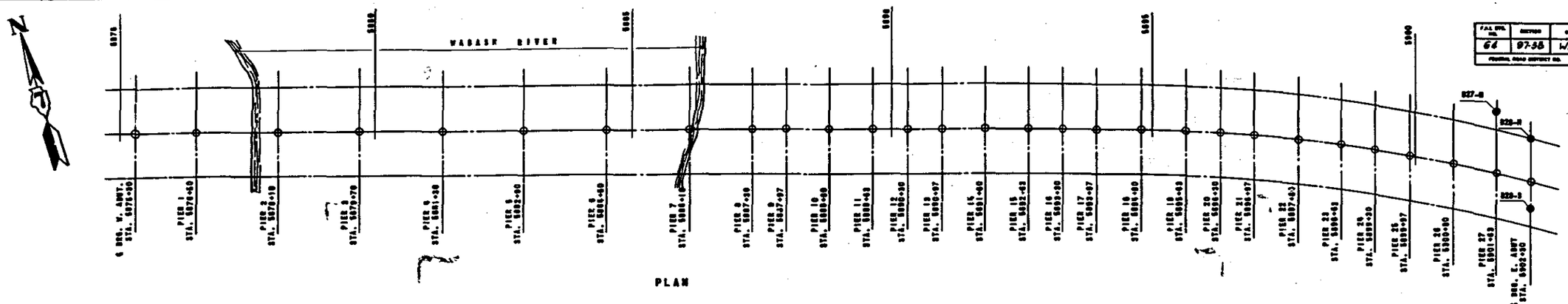

BORING NO.	B27-R	B28-R	B28-S
STATION	5901+43	5902+30	5902+30
OFFSET	62' LT.	96' LT.	28' RT.
GROUND ELEV.	377.6	377.1	377.0

SAMPLE NO.	SAMPLE EL.	N	DESCRIPTION
	377.6		GROUND SURFACE
	375.6		LOOSE BROWN MOTTLED SILTY CLAY
1	372.6	6	LOOSE BROWN SANDY CLAY
2		9	LOOSE BROWN SAND
3	365.6	6	
4		21	
5		22	
6		21	MEDIUM BROWN SAND WITH SHALE
7		30	WELL GRADED GRAVEL
8		26	
9		22	
10	355.6	35	
11	350.6	67	BROWN SAND WITH SHALE WELL GRADED GRAVEL
12	345.6	35	MEDIUM GRAY SAND WITH SHALE WELL GRADED GRAVEL
13	340.6	110	VERY DENSE VERY FINE GRAY SAND
14	335.6	19	MEDIUM FINE BROWN SAND WITH SOME SHALE GRAVEL
15	330.6	36	BROWN FINE GRAY SAND WITH SOME SHALE GRAVEL
16	325.6	35	MEDIUM FINE BROWN SAND WITH SOME SHALE GRAVEL
17	320.6	30	BROWN GRAY SAND WITH LARGE AMOUNT OF SHALE GRAVEL
18		16	MEDIUM GRAY SAND WITH LARGE AMOUNT OF SHALE GRAVEL
19	300.6	16	
20	295.6	36	DENSE GRAY SAND WITH SHALE WELL GRADED GRAVEL
21	290.6	72	
			END OF BORING
			DEPTH OF BORING 90.0'
22	290.6	72	VERY DENSE GRAY SAND WITH SHALE WELL GRADED GRAVEL

SAMPLE NO.	SAMPLE EL.	N	DESCRIPTION
	377.1		GROUND SURFACE
	373.1		MEDIUM BROWN SANDY CLAY LOAM
1		8	
2		7	LOOSE BROWN SAND
3	365.1	6	
4		12	
5		16	MEDIUM BROWN SILT WITH
6		19	SHALE WELL GRADED GRAVEL
7		18	
8	360.1	11	
9	358.1	7	VERY LOOSE FINE BROWN SAND
10		16	MEDIUM FINE BROWN SAND WITH
11	350.1	19	SHALE WELL GRADED GRAVEL
12		26	MEDIUM FINE GRAY SAND WITH
13	335.1	30	SHALE TO BRO-SHALE FOREST BROWN GRAVEL
14	330.1	90	DENSE GRAY SAND WITH SHALE WELL GRADED GRAVEL
15		30	
16	319.1	36	
17	315.1	7	LOOSE GRAY SAND WITH SHALE WELL GRADED GRAVEL
18		12	
19	305.1	51	MEDIUM GRAY SAND WITH SHALE WELL GRADED GRAVEL
20		86	VERY DENSE GRAY SAND WITH
21	290.0	72	SHALE WELL GRADED GRAVEL
			END OF BORING
			DEPTH OF BORING 86.5

SAMPLE NO.	SAMPLE EL.	N	DESCRIPTION
	377.0		GROUND SURFACE
	373.0		MEDIUM BROWN SANDY CLAY
1		7	
2	366.0	7	LOOSE FINE BROWN SAND
3		45	
4		16	MEDIUM FINE BROWN SAND
5	355.0	32	
6		21	MEDIUM FINE BROWN SAND
7		22	WITH SHALE WELL GRADED GRAVEL
8	352.0	27	
9		50	BROWN FINE BROWN SAND WITH
10	340.0	40	SHALE WELL GRADED GRAVEL
11		50	MEDIUM FINE BROWN SAND WITH
12	340.0	20	SHALE WELL GRADED GRAVEL
13		50	
14	340.0	50	
15		50	
16		10	
17		22	MEDIUM GRAY SAND WITH
18		18	SHALE WELL GRADED GRAVEL
19		20	
20		20	
21		23	
	300.0		
22		46	DENSE GRAY SAND WITH SHALE WELL GRADED GRAVEL
23	290.0	100	VERY DENSE FINE GRAY SAND
			END OF BORING
			DEPTH OF BORING 85.0
24	290.0	24	DENSE FINE BROWN SAND WITH SHALE WELL GRADED GRAVEL

FOR INFORMATION ONLY

CONSOER, TOWNSEND & ASSOCIATES
CONSULTING ENGINEERS CHICAGO, ILLINOIS

ILLINOIS DIVISION OF HIGHWAYS
FAI ROUTE 64 BRIDGE OVER WABASH RIVER
F.A.I. 64 SECTION 97-38
WHITE COUNTY, ILLINOIS
POSEY COUNTY, INDIANA

BORING LOGS

CAA CAA CAA

PLATE 1 - PLAN - PROFILE C.B.P.R.&R.R. STANDARD
GEMPRES & GRAEF CO., NEW YORK

FOR INFORMATION ONLY

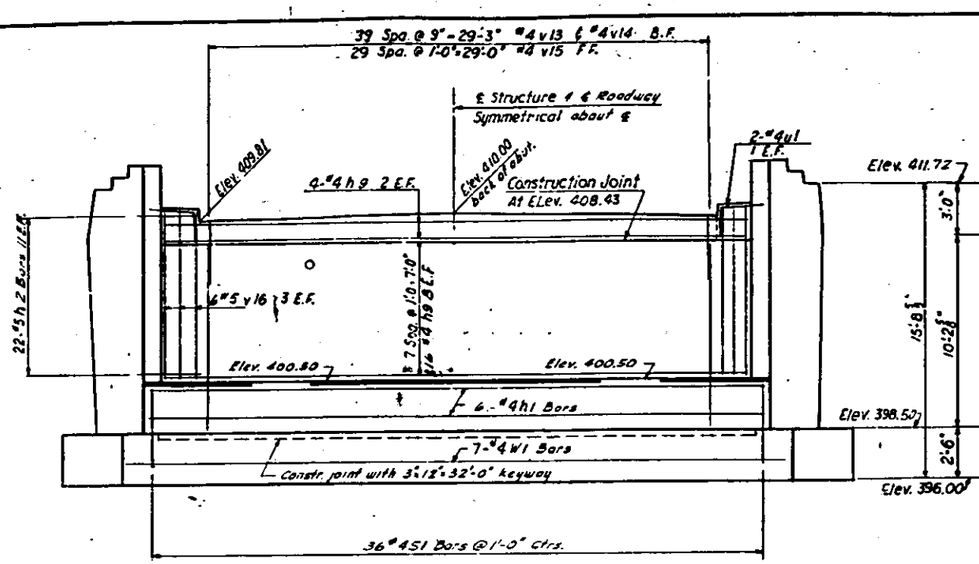

ELEVATION

Piles not shown

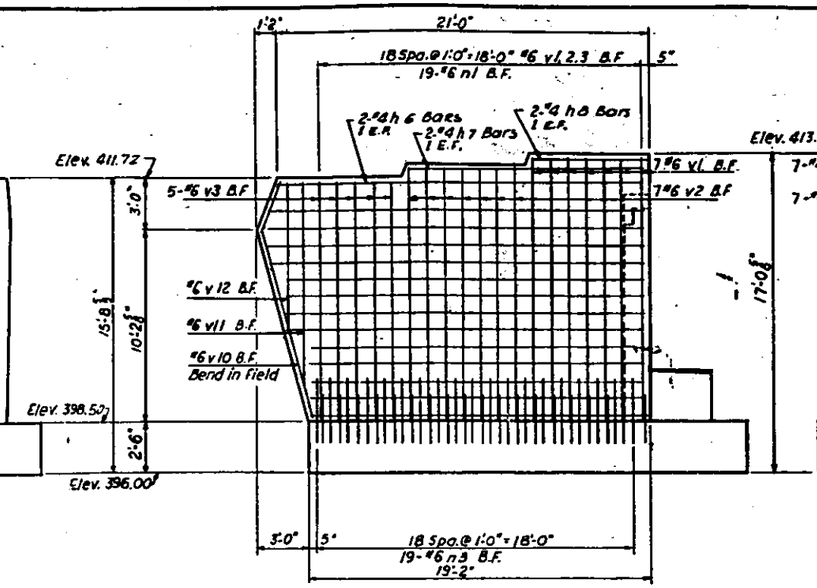

WINGWALL DETAILS

Piles not shown

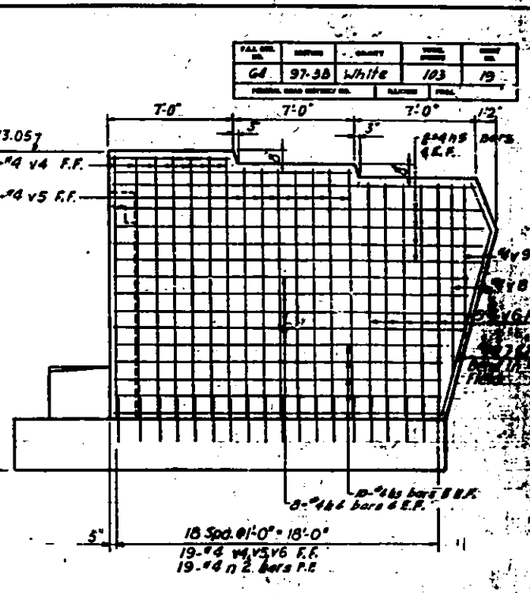

B.F. denotes back face.
F.F. denotes front face.
E.F. denotes each face.

FAI. RTE. NO.	SECTION	COUNTY	TOTAL SHEETS	SHEET NO.
64	97-3B	White	103	19
PROJECT NO.			PLAN NO.	PROJ.

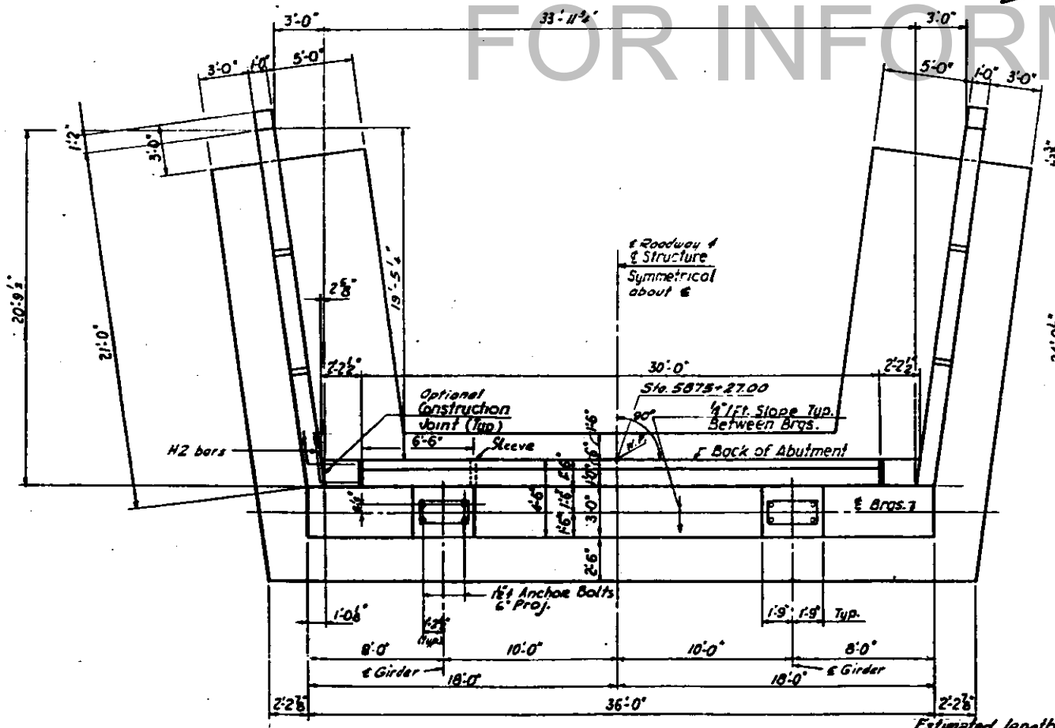

PLAN

Estimated length 12BP53 piles = 20 ft.
Piles to be driven to refusal.
For Piles Encasement see Sht. 85

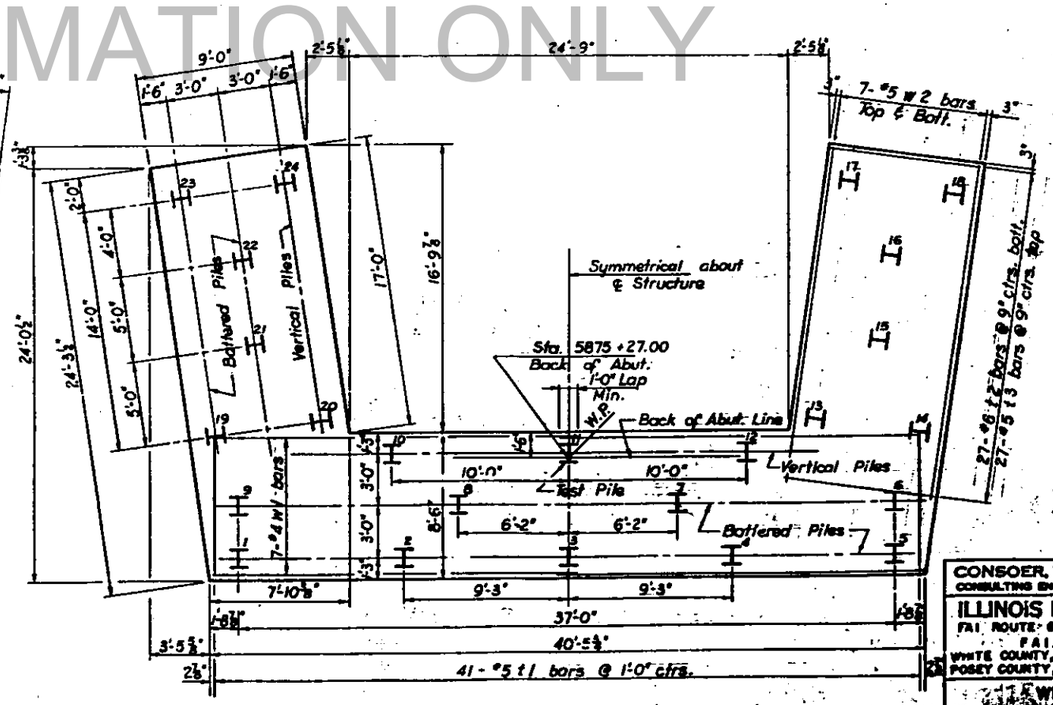

FOOTING PLAN

CONSOER, TOWNSEND & ASSOCIATES
CONSULTING ENGINEERS CHICAGO, ILLINOIS

ILLINOIS DIVISION OF HIGHWAYS
FAI ROUTE 64 BRIDGE OVER WABASH RIVER
FAI 64 SECTION 97-3B
WHITE COUNTY, ILLINOIS
POSEY COUNTY, INDIANA

WEST ABUTMENT

DATE				

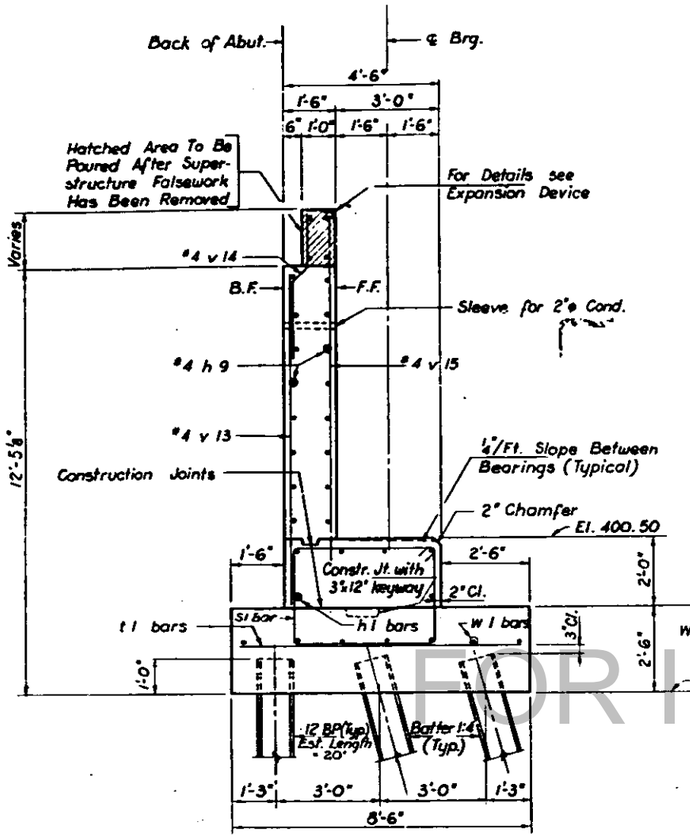

TYPICAL ABUTMENT SECTION

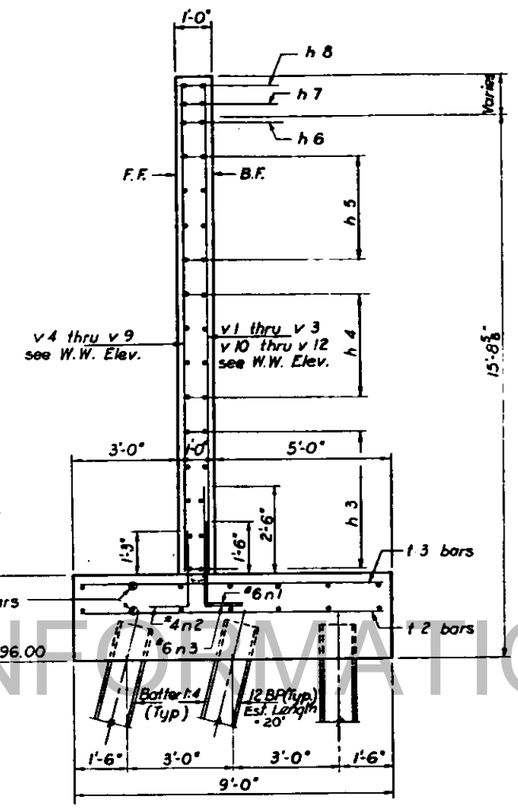

TYPICAL WINGWALL SECTION

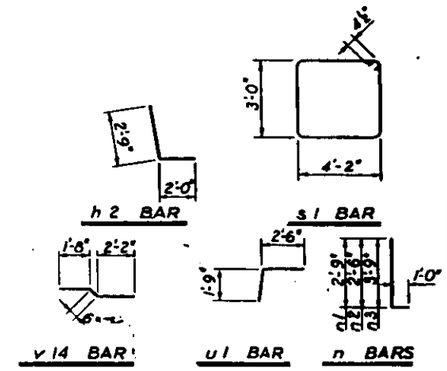

FAI RTE. NO.	SECTION	COUNTY	TOTAL SHEETS	SHEET NO.
64	97-3B	White	103	20
FEDERAL ROAD DISTRICT NO.		STATE		

BILL OF REINFORCEMENT

BAR	NO.	SIZE	LENGTH	SHAPE
h 1	6	4	35'-8"	
h 2	44	5	4'-9"	
h 3	20	4	18'-10"	
h 4	16	4	20'-0"	
h 5	16	4	21'-0"	
h 6	4	4	20'-6"	
h 7	4	4	13'-6"	
h 8	4	4	6'-6"	
h 9	20	4	33'-6"	
n 1	38	6	3'-9"	
n 2	38	4	3'-6"	
n 3	38	6	4'-9"	
s 1	36	4	15'-1"	
t 1	41	5	8'-0"	
t 2	54	6	8'-6"	
t 3	54	5	8'-6"	
u 1	4	4	4'-3"	
v 1	14	6	14'-3"	
v 2	14	6	13'-7"	
v 3	10	6	12'-11"	
v 4	14	4	14'-3"	
v 5	14	4	13'-7"	
v 6	10	4	12'-11"	
v 7	2	4	13'-3"	
v 8	2	4	11'-3"	
v 9	2	4	8'-6"	
v 10	2	6	13'-3"	
v 11	2	6	11'-3"	
v 12	2	6	8'-6"	
v 13	40	4	9'-9"	
v 14	40	4	4'-4"	
v 15	30	4	10'-0"	
v 16	12	5	9'-8"	
w 1	14	4	20'-7"	
w 2	28	5	19'-9"	

ABUTMENT QUANTITIES		
CLASS X CONCRETE	CU. YDS.	110.3
REINFORCING BARS	LBS.	6800
PILES 12 BP 53	LIN. FT.	460
TEST PILE 12 BP 53	EA.	1

Quantities Shown are for one(1) Abutment

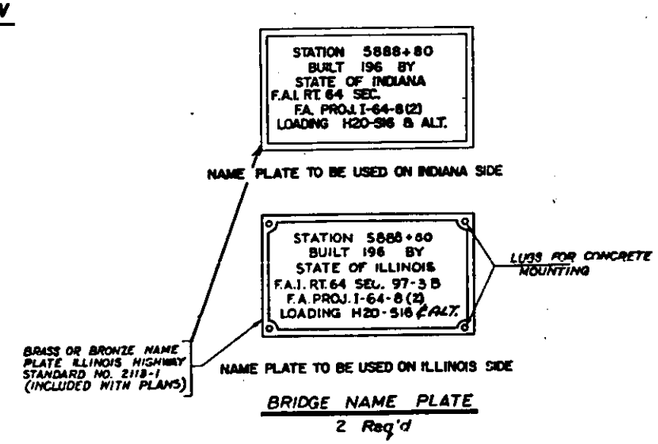

BRIDGE NAME PLATE
2 Req'd

Use for N.B. & E.B. Structures.

CONSOER, TOWNSEND & ASSOCIATES
CONSULTING ENGINEERS CHICAGO, ILLINOIS

ILLINOIS DIVISION OF HIGHWAYS
FAI ROUTE 64 BRIDGE OVER WABASH RIVER
F.A.I. 64 SECTION 97-3B
WHITE COUNTY, ILLINOIS
POSEY COUNTY, INDIANA

WEST ABUTMENT DETAILS

DESIGNED	DRAWN	TRACED	CHECKED	SUBMITTED		
D.M.R.	T.L.	T.L.	L.S.			

FOR INFORMATION ONLY

94	97-38	WHITE	103	87

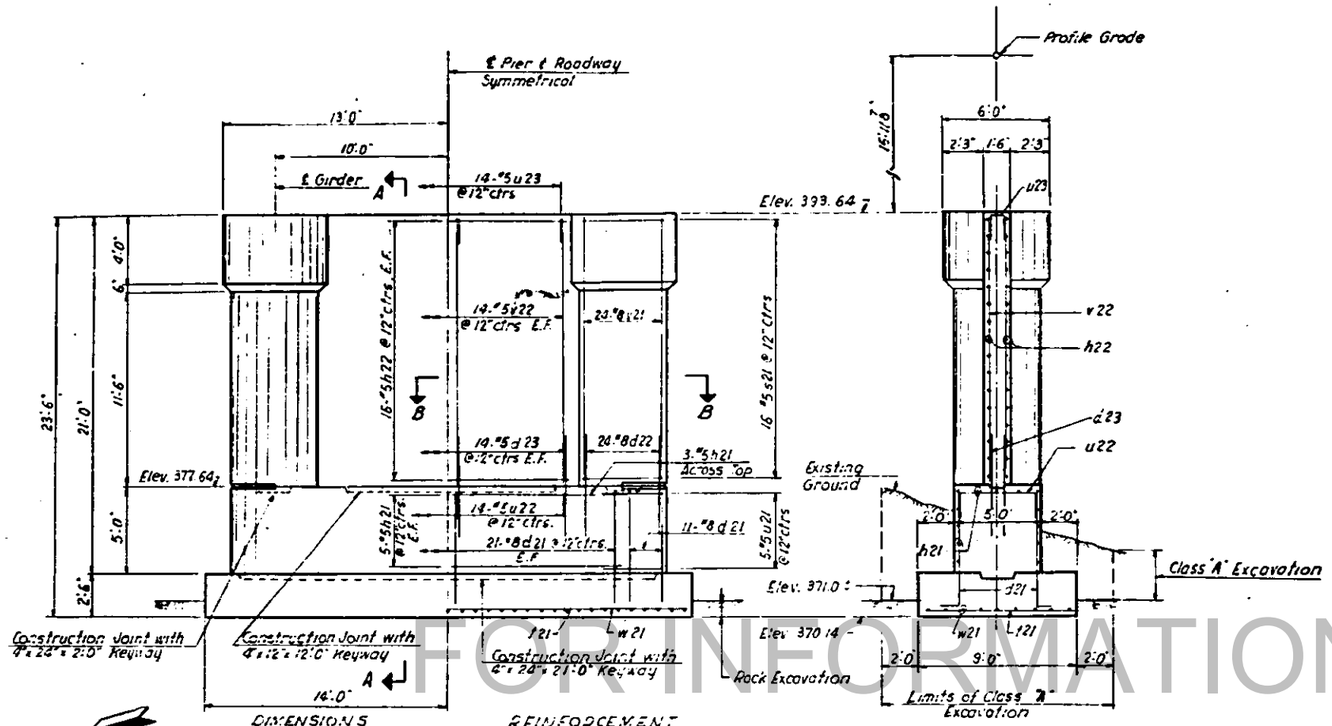

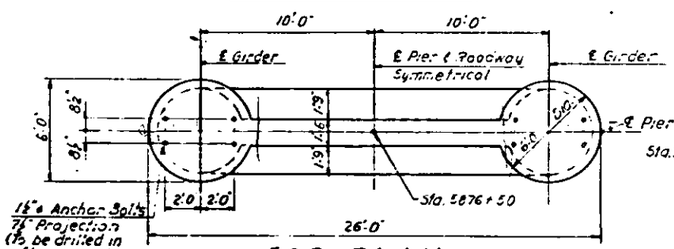

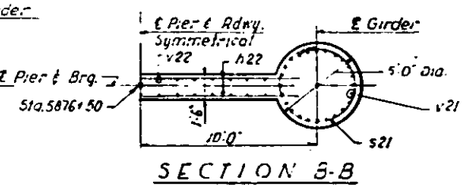

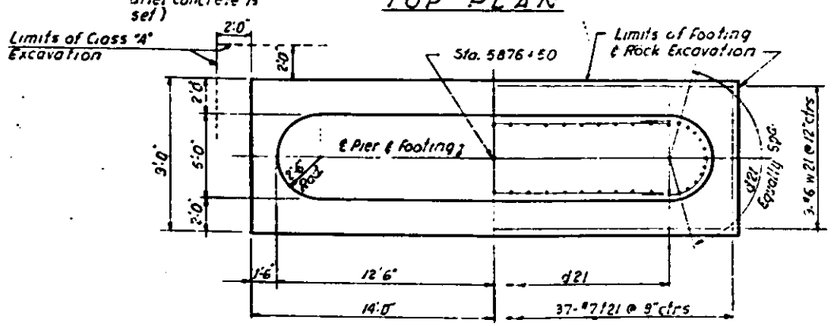

NOTES:

All edges shall have standard 4" chamfer except footing.

E.F. denotes each face.

Maximum Footing Pressure = 9040 p.s.f. (A.A.S.H.O Group V Loading)

3" Min. Cl. Footing ℄ Col. Reinf.
2" Min. all other.

Use this Drg. for W.B. ℄ E.B. Structures.

Horiz. Bars extending into columns to clear column reinf.

Quantities shown are for one (1) Pier.

BILL OF MATERIAL

Bar	No.	Size	Length	Shape
d21	64	8	8'6"	L
d22	48	8	6'0"	—
d23	28	5	6'0"	—
h21	13	5	20'0	—
h22	32	5	18'0	—
s21	32	5	15'6"	○
t21	37	7	8'6	—
u21	10	5	10'0"	⊓
u22	14	5	7'6	⊓
u23	14	5	4'0"	⊓
v21	48	8	15'6	—
v22	28	5	15'6"	—
w21	9	6	27'6"	—

Reinf. Bars	Lbs.	7513
Class "A" Conc	Cu.Yds	84.7
Class "A" Exc	Cu.Yds	40
Rock Exc	Cu.Yds.	8

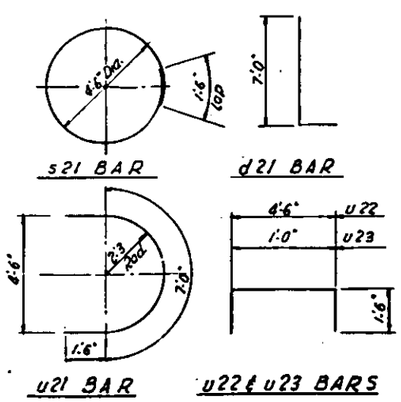

Use this Dwg. for W.B. & E.B. Structures.

CONSOER, TOWNSEND & ASSOCIATES
CONSULTING ENGINEERS CHICAGO, ILLINOIS

ILLINOIS DIVISION OF HIGHWAYS
FAI ROUTE 64 BRIDGE OVER WABASH RIVER
FAI 64 SECTION 97-38
WHITE COUNTY, ILLINOIS
POSEY COUNTY, INDIANA

PIER NO. 1

FOR INFORMATION ONLY

F.A.I. RTE. NO.	SECTION	COUNTY	TOTAL SHEETS	SHEET NO.
64	97-3B	WHITE	103	22
FEDERAL ROAD DISTRICT NO.		ILLINOIS	PROJECT NO.	

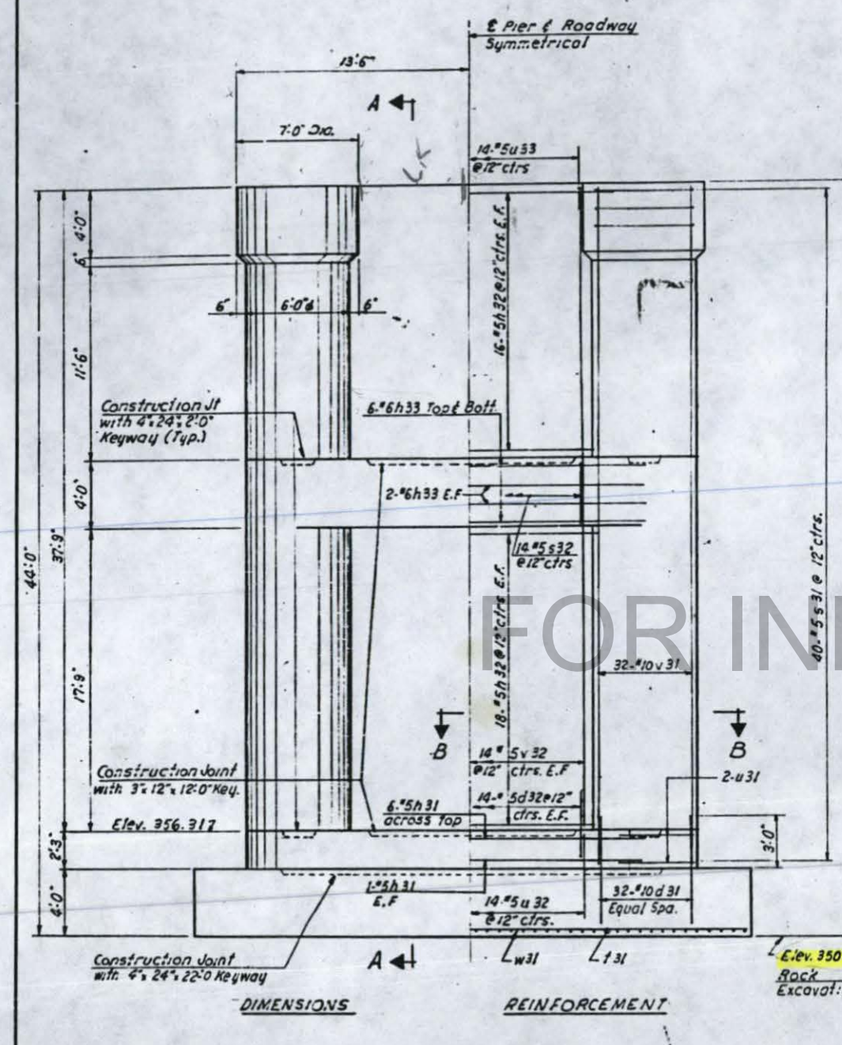

DIMENSIONS

REINFORCEMENT

ELEVATION

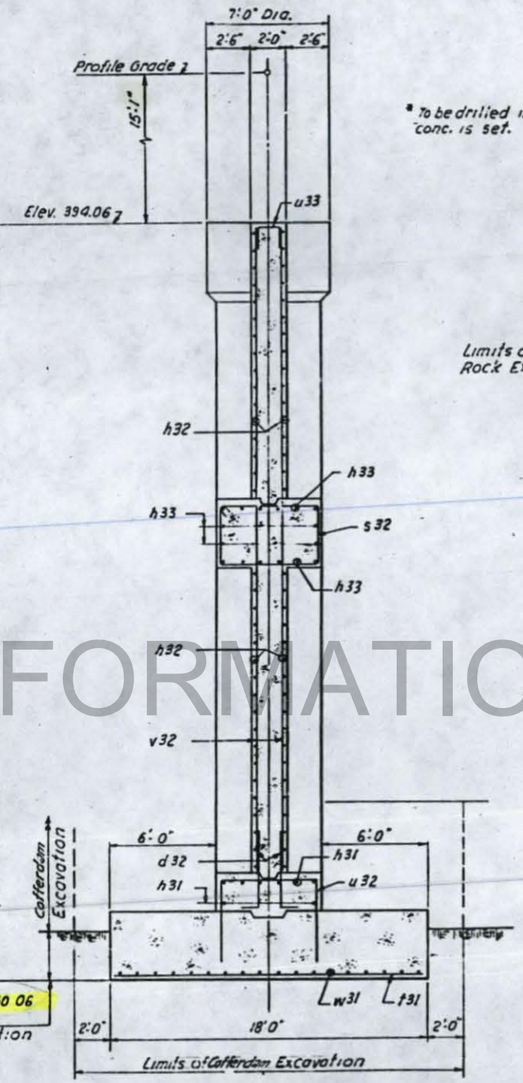

SECTION A-A

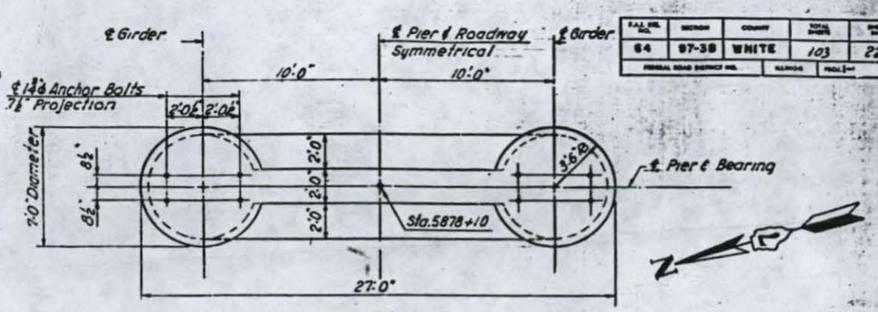

* To be drilled in after conc. is set.

TOP PLAN

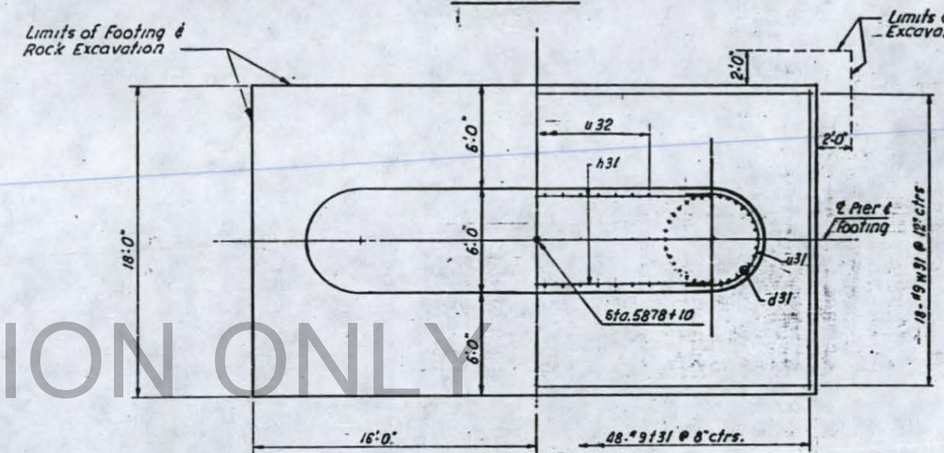

FOOTING PLAN

BILL OF MATERIAL				
Bar	No.	Size	Length	Shape
d31	64	10	6'-0"	
d32	28	5	5'-0"	L
h31	8	5	20'-0"	
h32	68	5	16'-0"	
h33	16	6	20'-0"	
s31	80	5	19'-0"	O
s32	14	5	19'-0"	D
t31	48	9	17'-6"	
u31	4	5	11'-8"	U
u32	14	5	15'-6"	U
u33	14	5	4'-6"	U
v31	64	10	39'-6"	
v32	28	5	37'-6"	
w31	18	9	31'-6"	
Reinforcing Bars			Lbs.	22,542
Class "A" Concrete			Cu. Yds.	192.1
Cofferdam Exc.			Cu. Yds.	65
Rock Excavation			Cu. Yds.	41

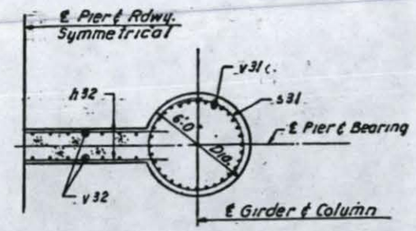

SECTION B-B

NOTES

All edges shall have standard ¾" chamfer except footing

E.F. denotes each face

Maximum footing pressure = 6050 p.s.f. (A.A.S.H.O. Group "I" Loading

3" Minimum clear. ftg. & col. Reinf.

2" Min. all other

Use this Drg. for W.B. & E.B. Structures

Horiz. Bars extending into columns to clear column reinforcement

Quantities shown are for one (1) Pier

Use this Dwg. for W.B. & E.B. Structures.

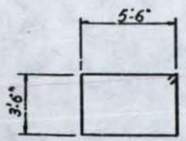

s32 BAR

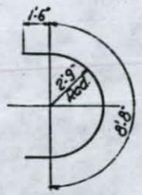

u31 BAR

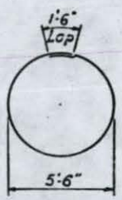

s31 BAR

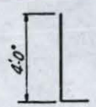

d 32 BAR

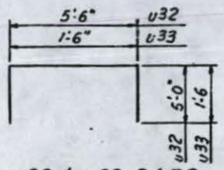

u32 & u33 BARS

CONSOER, TOWNSEND & ASSOCIATES
CONSULTING ENGINEERS CHICAGO, ILLINOIS

ILLINOIS DIVISION OF HIGHWAYS

FAI ROUTE 64 BRIDGE OVER WABASH RIVER
FAI 64 SECTION 97-3B
WHITE COUNTY, ILLINOIS
POSEY COUNTY, INDIANA

PIER NO. 2

DESIGNED	DRAWN	CHECKED	REVIEWED	DATE	REVISED
	L.H.	L.H.			

2-23-66: Revised Cofferdam Exc. from 165 to 65. J.T.R.

FOR INFORMATION ONLY

F.A.I. RTE. NO.	SECTION	COUNTY	TOTAL SHEETS	SHEET NO.
64	97-3B	White	103	73
FEDERAL ROAD DISTRICT NO.		ILLINOIS	PROJ.	

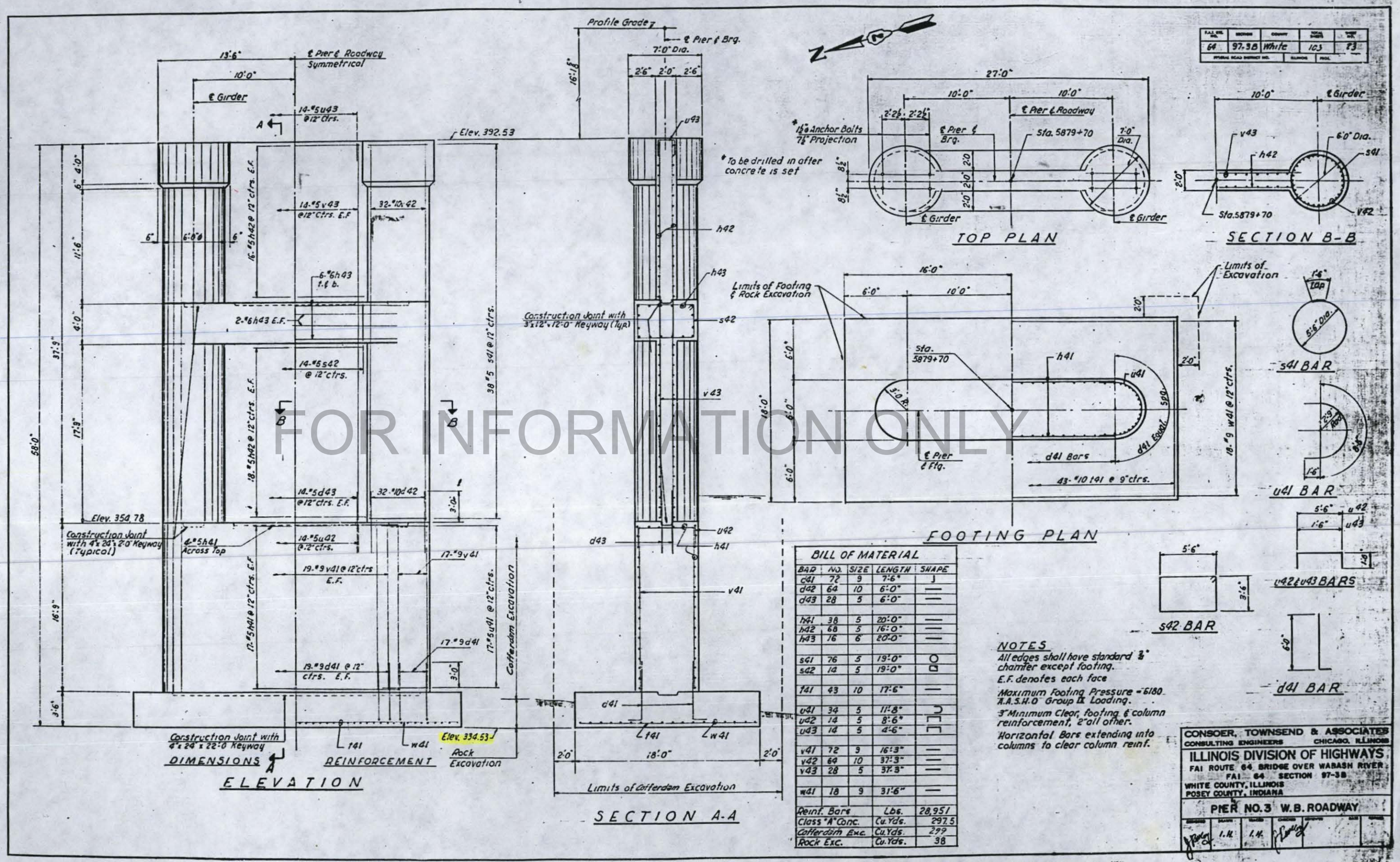

FOR INFORMATION ONLY

BILL OF MATERIAL

BAR	NO.	SIZE	LENGTH	SHAPE
c41	72	9	7'-6"	J
d42	64	10	6'-0"	—
d43	28	5	6'-0"	—
h41	38	5	20'-0"	—
h42	68	5	16'-0"	—
h43	16	6	20'-0"	—
s41	76	5	19'-0"	O
s42	14	5	19'-0"	▭
t41	43	10	17'-6"	—
u41	34	5	11'-8"	⊃
u42	14	5	8'-6"	⊓
u43	14	5	4'-6"	⊓
v41	72	9	16'-3"	—
v42	64	10	37'-3"	—
v43	28	5	37'-3"	—
w41	18	9	31'-6"	—
Reinf. Bars			Lbs.	28,951
Class "A" Conc.			Cu. Yds.	297.5
Cofferdam Exc.			Cu. Yds.	299
Rock Exc.			Cu. Yds.	38

NOTES

All edges shall have standard ¾" chamfer except footing.

E.F. denotes each face

Maximum Footing Pressure = 6180

A.A.S.H.O. Group II Loading.

3" Minimum Clear, footing & column reinforcement, 2" all other.

Horizontal Bars extending into columns to clear column reinf.

CONSOER, TOWNSEND & ASSOCIATES
CONSULTING ENGINEERS CHICAGO, ILLINOIS

ILLINOIS DIVISION OF HIGHWAYS
FAI ROUTE 64 BRIDGE OVER WABASH RIVER
FAI 64 SECTION 97-3B
WHITE COUNTY, ILLINOIS
POSEY COUNTY, INDIANA

PIER NO. 3 W.B. ROADWAY

DESIGNED	DRAWN	TRACED	CHECKED	SUPERVISED	DATE	REVISED
	I.H.	I.H.				

Revised Cofferdam Excavation from 4% to 2½% M.R.L.L. J.T.K.

F.A.I. RTE. NO.	SECTION	COUNTY	TOTAL SHEETS	SHEET NO.
64	97-3B	White	103	24
FEDERAL ROAD DISTRICT NO.		ILLINOIS	PROJ.	

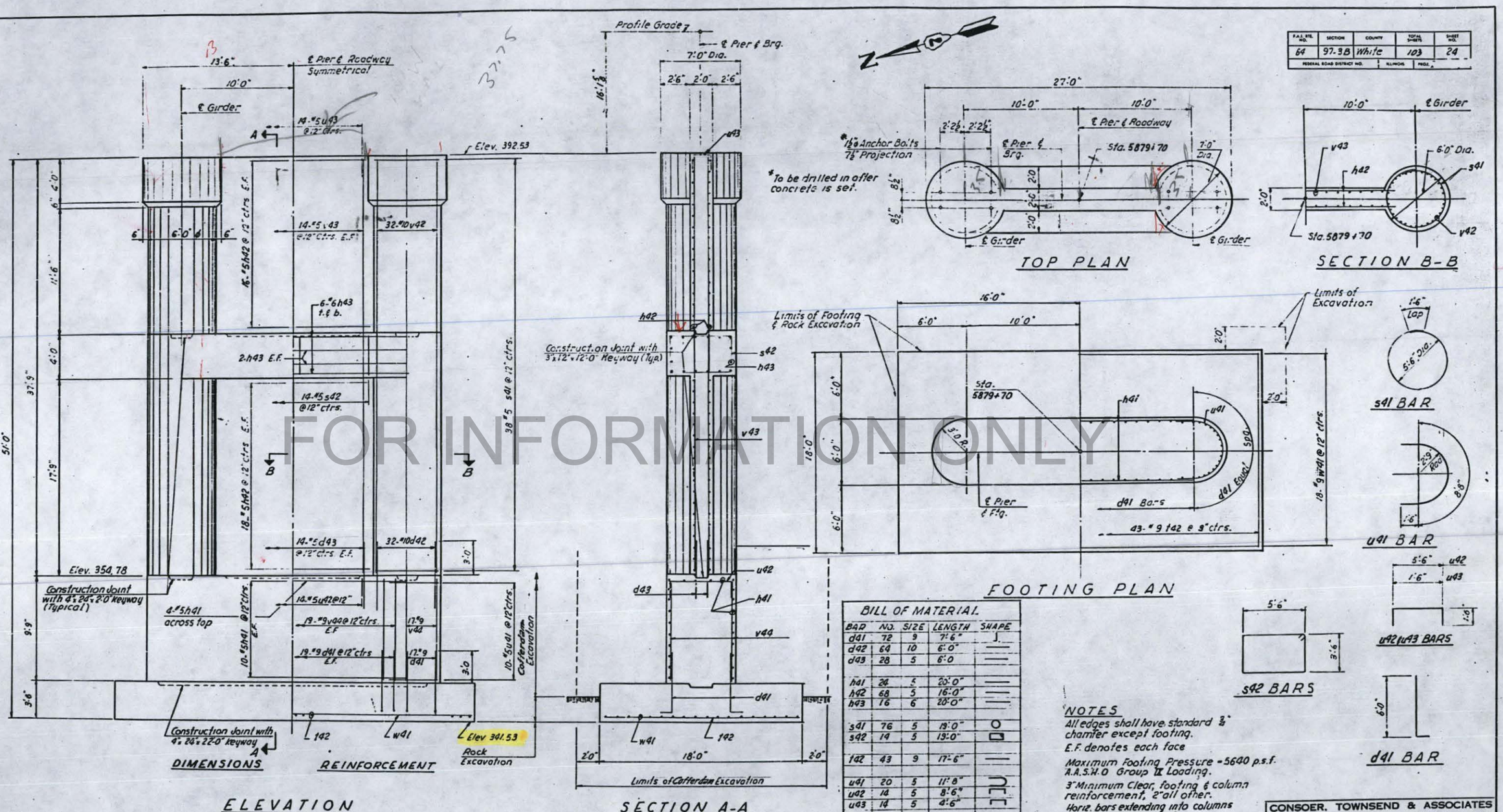

FOR INFORMATION ONLY

BILL OF MATERIAL

BAR	NO.	SIZE	LENGTH	SHAPE
d41	72	9	7'-6"	J
d42	64	10	6'-0"	—
d43	28	5	6'-0	—
h41	24	5	20'-0"	—
h42	68	5	16'-0"	—
h43	16	6	20'-0"	—
s41	76	5	19'-0"	O
s42	14	5	19'-0"	▭
f42	43	9	17'-6"	—
u41	20	5	11'-8"	⊓
u42	14	5	8'-6"	⊓
u43	14	5	4'-6"	⊓
v44	72	9	9'-3"	—
v42	64	10	37'-3"	—
v43	28	5	37'-3"	—
w41	18	9	31'-6"	—
Reinf. Bars			Lbs.	26,095
Class "A" Conc.			Cu. Yds.	259.0
Cofferdam Exc.			Cu. Yds.	50
Rock Exc.			Cu. Yds.	53

Revised cofferdam Exc. 6-24-66 JTR

NOTES

All edges shall have standard ¾" chamfer except footing.

E.F. denotes each face

Maximum Footing Pressure = 5640 p.s.f.
A.A.S.H.O Group IX Loading.

3" Minimum Clear, footing & column reinforcement, 2" all other.

Horiz. bars extending into columns to clear column reinforcing.

CONSOER, TOWNSEND & ASSOCIATES
CONSULTING ENGINEERS CHICAGO, ILLINOIS

ILLINOIS DIVISION OF HIGHWAYS
FAI ROUTE 64 BRIDGE OVER WABASH RIVER
FAI 64 SECTION 97-3B
WHITE COUNTY, ILLINOIS
POSEY COUNTY, INDIANA

PIER NO. 3 E.B. ROADWAY

DESIGNED	DRAWN	TRACED	CHECKED	SUPERVISED	DATE	REVISED
	I.H.	I.H.				

F.A.I. RTE. NO.	SECTION	COUNTY	TOTAL SHEETS	SHEET NO.
64	97-38	White	103	25
FEDERAL ROAD DISTRICT NO.		ILLINOIS	PLAN	

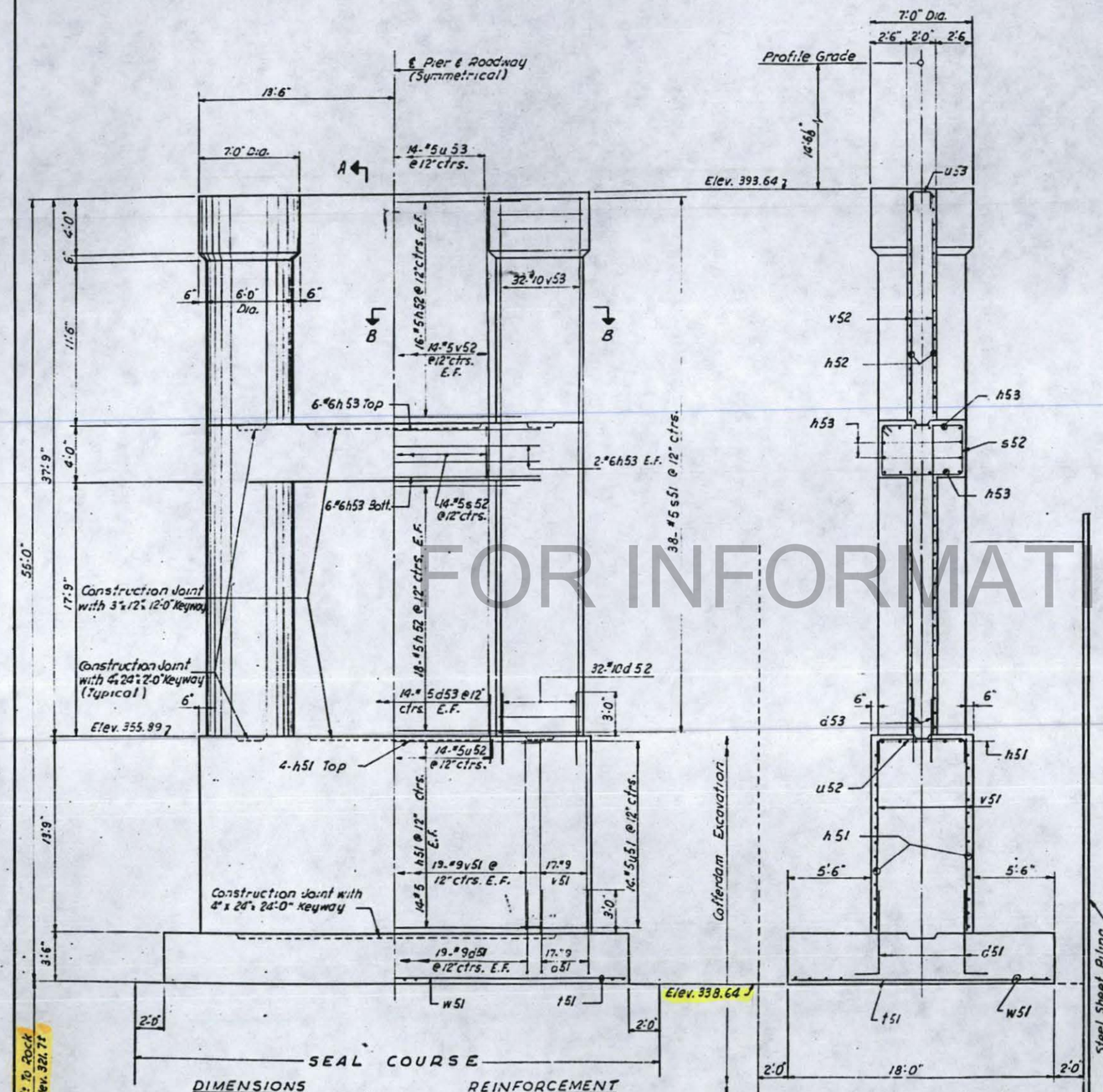

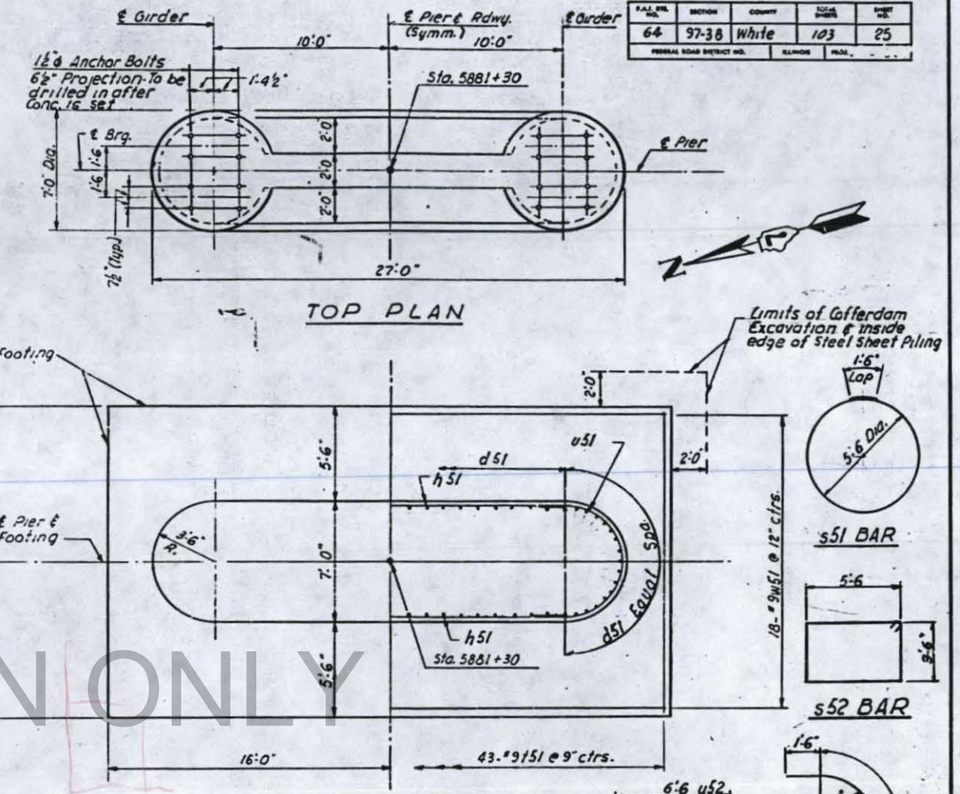

FOR INFORMATION ONLY

BILL OF MATERIAL				
Bar	No.	Size	Length	Shape
d 51	72	9	7'-6"	
d 52	64	10	6'-0"	
d 53	28	5	6'-0"	
h 51	32	5	20'-0"	
h 52	68	5	16'-0"	
h 53	16	6	20'-0"	
s 51	76	5	19'-0"	
s 52	14	5	19'-0"	
t 51	43	9	17'-6"	
u 51	28	5	13'-3"	
u 52	14	5	9'-6"	
u 53	14	5	4'-6"	
v 51	72	9	13'-3"	
v 52	28	5	37'-3"	
v 53	64	10	37'-3"	
w 51	18	9	31'-6"	
Reinforcing Bars			Lbs.	27,400
Class "A" Concrete			Cu. Yds.	296.3
Cofferdam Excavation			Cu. Yds.	647
Seal Course			Cu. Yds.	496

NOTES

All edges to have standard ¾" chamfer except footing.

3" Min. clear. Footing & Column reinf. 2" all other.

Horiz. Bars extending into columns to clear column reinforcing.

Seal Course is designed for W.S. Elev. 366.0. If conditions differ at time of construction, contact District Engineer.

Quantities shown are for one (1) Pier

E.F. denotes each face

Use this dwg. for W.B. & E.B. Structures

Revised Cofferdam Exc. from 1299 to 647 2-24-66 JTR

CONSOER, TOWNSEND & ASSOCIATES
CONSULTING ENGINEERS CHICAGO, ILLINOIS

ILLINOIS DIVISION OF HIGHWAYS
FAI ROUTE 64 BRIDGE OVER WABASH RIVER
FAI 64 SECTION 97-38
WHITE COUNTY, ILLINOIS
POSEY COUNTY, INDIANA

PIER NO. 4

DESIGNED	DRAWN	TRACED	CHECKED	REVIEWED	DATE	APPROVED
	L.H.	L.H.				

F.A.S. RTE. NO.	SECTION	COUNTY	TOTAL SHEETS	SHEET NO.
64	97-3B	White	103	26
FEDERAL ROAD DISTRICT NO.		ILLINOIS	PROJ.	

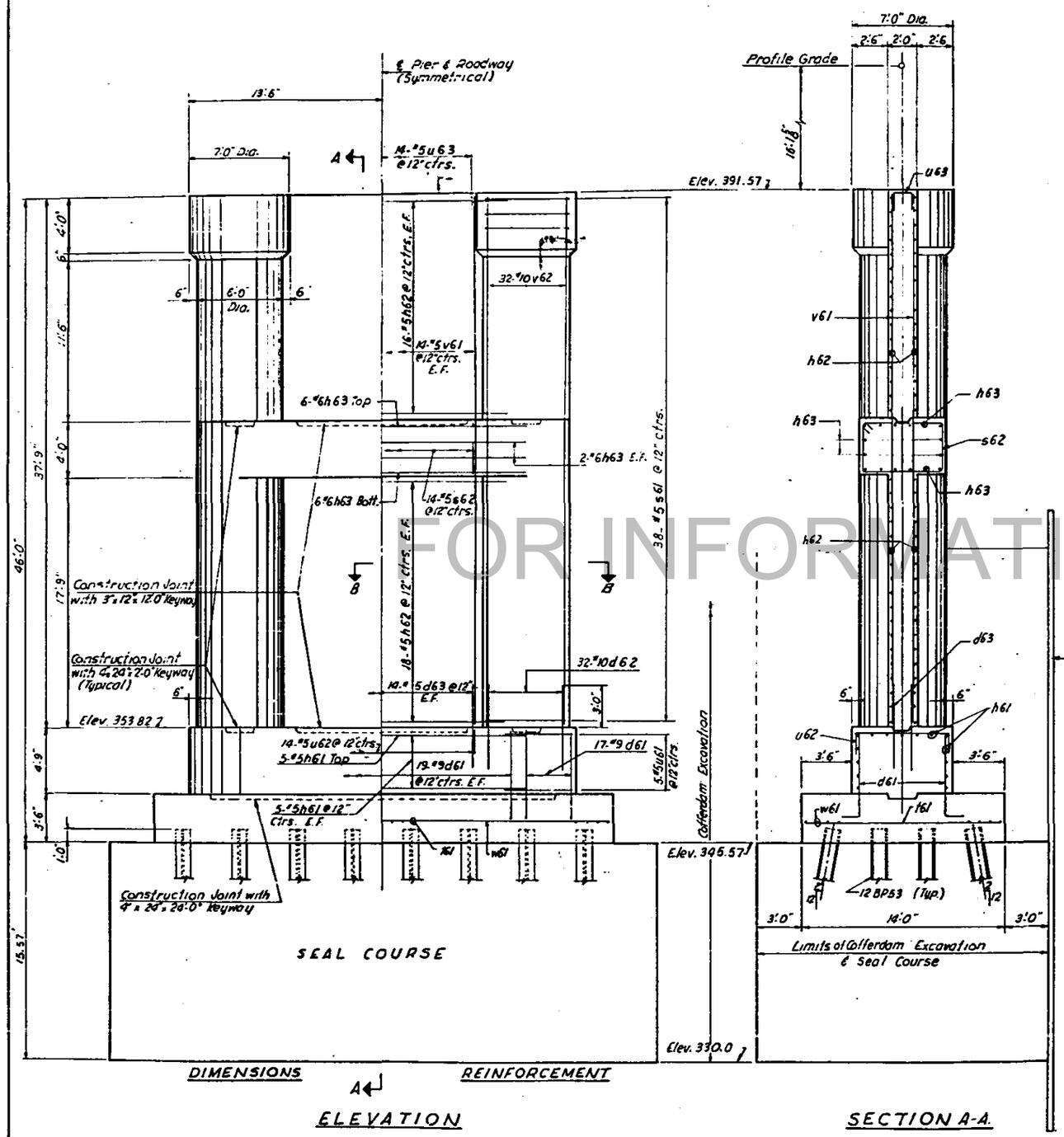

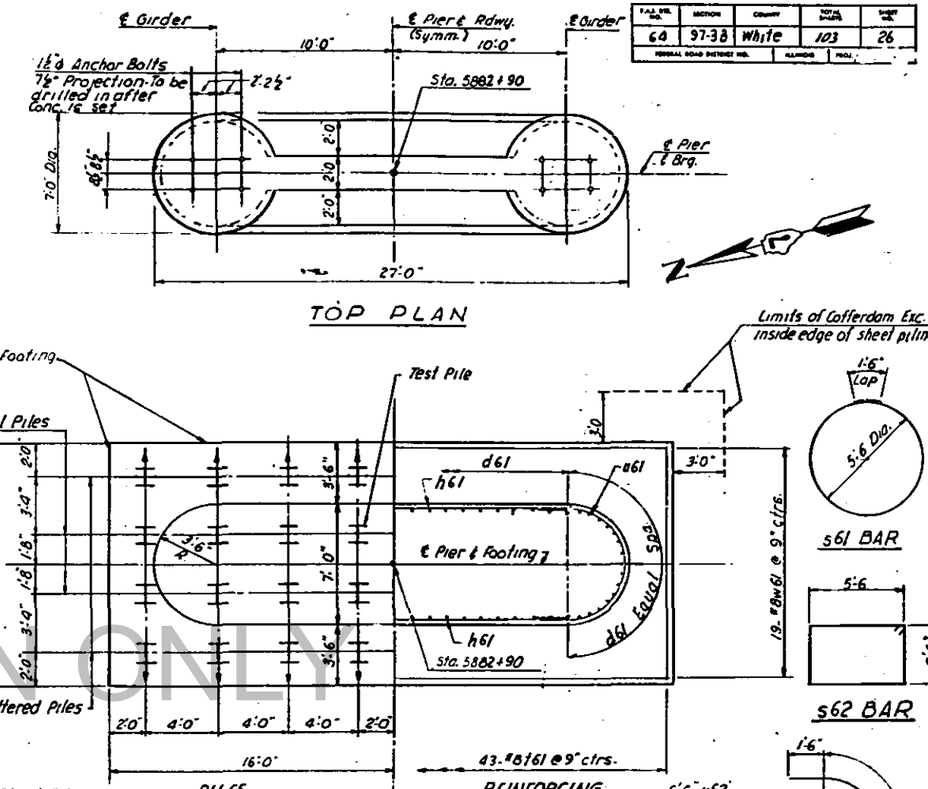

BILL OF MATERIAL				
Bar	No.	Size	Length	Shape
d61	72	9	7'-6"	J
d62	64	10	6'-0"	—
d63	28	5	6'-0"	—
h61	15	5	20'-0"	—
h62	68	5	16'-0"	—
h63	16	6	20'-0"	—
s61	76	5	19'-0"	
s62	14	5	19'-0"	
t61	43	8	13'-6"	—
u61	10	5	13'-3"	
u62	14	5	9'-6"	
u63	14	5	4'-6"	
v61	28	5	37'-3"	—
v62	64	10	37'-3"	—
w61	19	8	31'-6"	—
12 BP53 Test Pile			Each.	1
Reinforcing Bars			Lbs.	22,216
Class "A" Concrete			Cu. Yds.	220.2
Cofferdam Excavation			Cu. Yds.	432
Seal Course			Cu. Yds.	439
12BP53 Piles			Lin. Ft.	899

NOTES

All edges to have standard ¾" chamfer except footing.

3" Min. clear. Footing & Column reinf. 2" all other.

Horiz. Bars extending into columns to clear column reinforcing.

Seal Course is designed for W.S. Elev. 366.0. If conditions differ at time of construction, contact District Engineer.

Quantities shown are for one (1) Pier

12BP53 Piles shall be driven to refusal.

Estimated length of Piles = 29 ft.

E.F. denotes each face

Use this Dwg for W.B. & E.B. Structures.

CONSOER, TOWNSEND & ASSOCIATES
CONSULTING ENGINEERS CHICAGO, ILLINOIS

ILLINOIS DIVISION OF HIGHWAYS

FAI ROUTE 64 BRIDGE OVER WABASH RIVER
FAI 64 SECTION 97-3B
WHITE COUNTY, ILLINOIS
POSEY COUNTY, INDIANA

PIER NO. 5

I.N. I.N.

Revised Cofferdam Excavation from 413 to 432 24 MAR 66 JTR

FOR INFORMATION ONLY

F.A.S. RTE. NO.	SECTION	COUNTY	TOTAL SHEETS	SHEET NO.
64	97-3B	White	103	27
PRINCIPAL ROAD DISTRICT NO.		ILLINOIS	FROM	

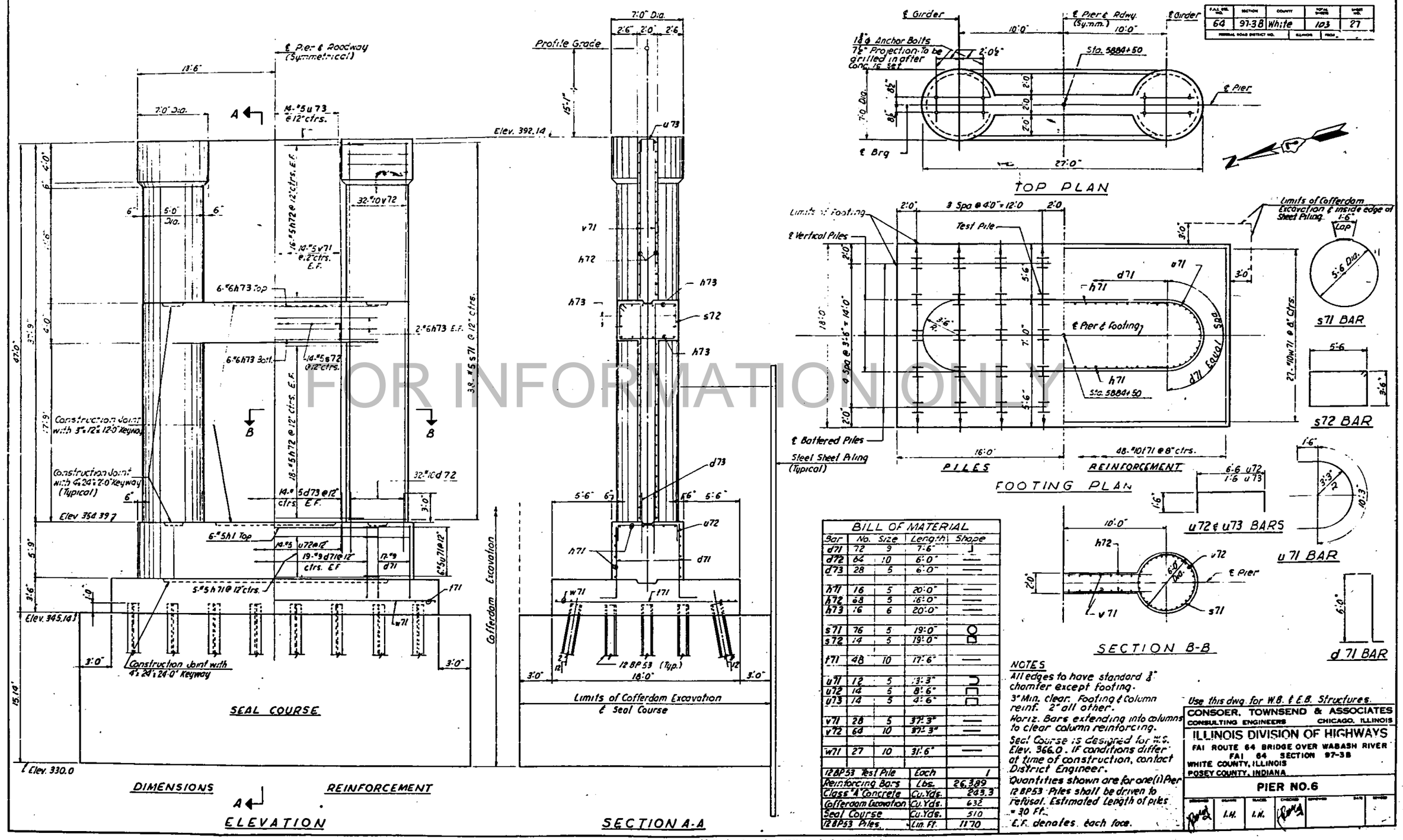

FOR INFORMATION ONLY

BILL OF MATERIAL

Bar	No.	Size	Length	Shape
d71	72	9	7'-6"	
d72	64	10	6'-0"	
d73	28	5	6'-0"	
h71	16	5	20'-0"	
h72	68	5	16'-0"	
h73	16	6	20'-0"	
s71	76	5	19'-0"	
s72	14	5	19'-0"	
t71	48	10	17'-6"	
u71	12	5	13'-3"	
u72	14	5	8'-6"	
u73	14	5	4'-6"	
v71	28	5	37'-3"	
v72	64	10	37'-3"	
w71	27	10	31'-6"	
12 BP53 Test Pile			Each	1
Reinforcing Bars			Lbs.	26,389
Class "A" Concrete			Cu. Yds.	243.3
Cofferdam Excavation			Cu. Yds.	632
Seal Course			Cu. Yds.	510
12 BP53 Piles			Lin. Ft.	1170

NOTES

All edges to have standard ¾" chamfer except footing.

3" Min. clear. Footing & Column reinf. 2" all other.

Horiz. Bars extending into columns to clear column reinforcing.

Seal Course is designed for W.S. Elev. 366.0. If conditions differ at time of construction, contact District Engineer.

Quantities shown are for one (1) Pier.

12 BP53 Piles shall be driven to refusal. Estimated Length of piles = 30 Ft.

E.F. denotes each face.

Use this dwg. for W.B. & E.B. Structures.

CONSOER, TOWNSEND & ASSOCIATES
CONSULTING ENGINEERS CHICAGO, ILLINOIS

ILLINOIS DIVISION OF HIGHWAYS
FAI ROUTE 64 BRIDGE OVER WABASH RIVER
FAI 64 SECTION 97-3B
WHITE COUNTY, ILLINOIS
POSEY COUNTY, INDIANA

PIER NO. 6

DESIGNED	DRAWN	TRACED	CHECKED	SUPERVISED	DATE	REVISED
	I.H.	I.H.				

2-23-66 Revised Cofferdam Exc. from 1216 cu. yds. to 632 cu. yds.

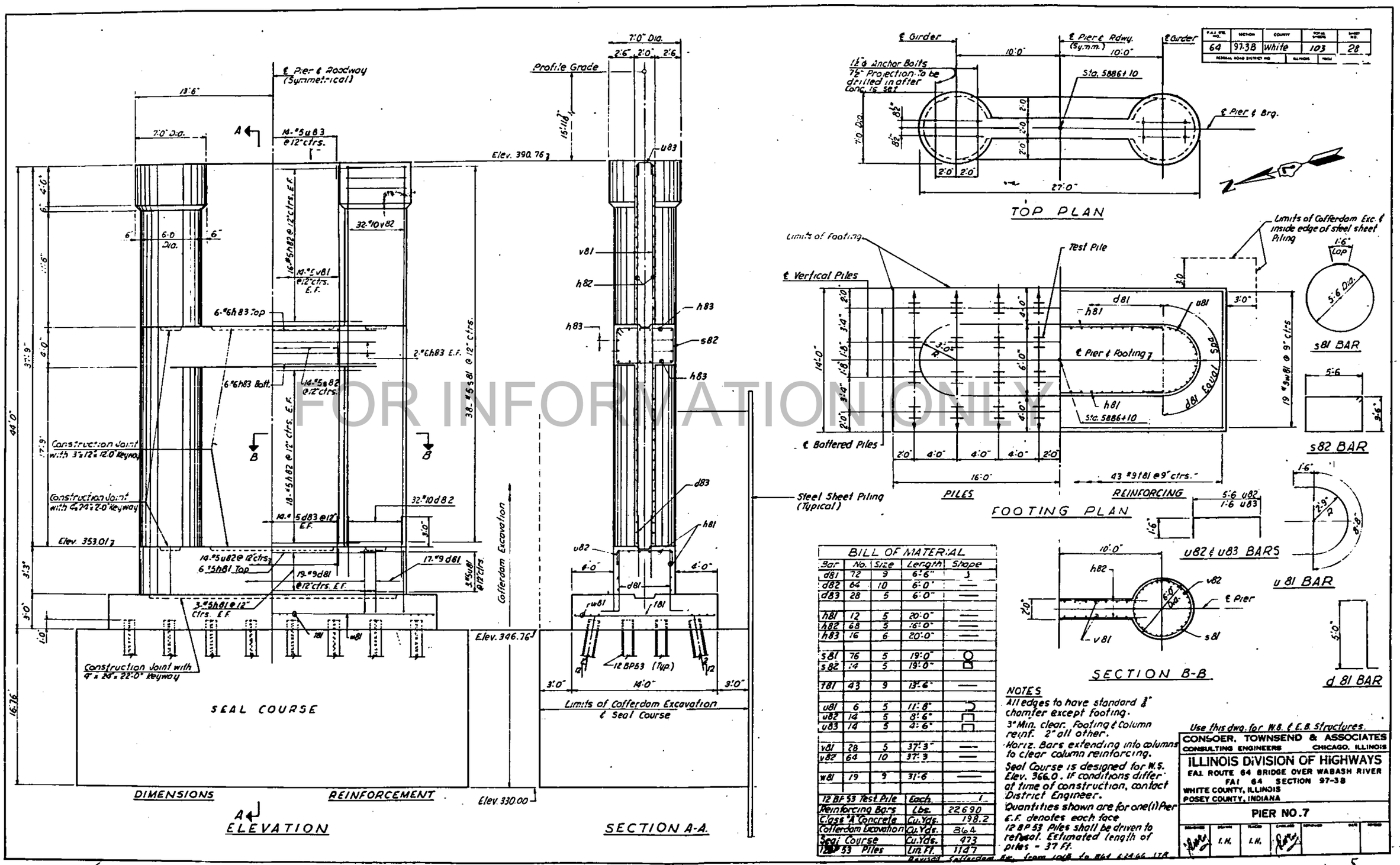

F.A.I. RTE. NO.	SECTION	COUNTY	TOTAL SHEETS	SHEET NO.
64	97-3B	White	103	28
FEDERAL ROAD DISTRICT NO.		ILLINOIS	PROJ.	

BILL OF MATERIAL				
Bar	No.	Size	Length	Shape
d81	72	9	6'-6"	
d82	64	10	6'-0"	—
d83	28	5	6'-0"	—
h81	12	5	20'-0"	—
h82	68	5	16'-0"	—
h83	16	6	20'-0"	—
s81	76	5	19'-0"	
s82	14	5	19'-0"	
t81	43	9	13'-6"	—
u81	6	5	11'-8"	
u82	14	5	8'-6"	
u83	14	5	4'-6"	
v81	28	5	37'-3"	—
v82	64	10	37'-3	—
w81	19	9	31'-6	—
12 BP 53 Test Pile			Each.	1
Reinforcing Bars			Lbs.	22690
Class "A" Concrete			Cu. Yds.	198.2
Cofferdam Excavation			Cu. Yds.	864
Seal Course			Cu. Yds.	473
12 BP 53 Piles			Lin. Ft.	1147

Revised Cofferdam Exc. from 1018 to 864 4-24-66 LTR

NOTES

All edges to have standard 3/4" chamfer except footing.

3" Min. clear. Footing & Column reinf. 2" all other.

Horiz. Bars extending into columns to clear column reinforcing.

Seal Course is designed for W.S. Elev. 366.0. If conditions differ at time of construction, contact District Engineer.

Quantities shown are for one (1) Pier

E.F. denotes each face

12 BP 53 Piles shall be driven to refusal. Estimated length of piles - 37 Ft.

Use this dwg. for W.B. & E.B. Structures.

CONSOER, TOWNSEND & ASSOCIATES
CONSULTING ENGINEERS CHICAGO, ILLINOIS

ILLINOIS DIVISION OF HIGHWAYS
FAI ROUTE 64 BRIDGE OVER WABASH RIVER
FAI 64 SECTION 97-3B
WHITE COUNTY, ILLINOIS
POSEY COUNTY, INDIANA

PIER NO. 7

DESIGNED | DRAWN I.H. | TRACED I.H. | CHECKED | SUPERVISED | DATE | REVISED

FOR INFORMATION ONLY

F.A.I. RTE. NO.	SECTION	COUNTY	TOTAL SHEETS	SHEET NO.
64	97-3B	White	103	29
FEDERAL HIGHWAY DISTRICT NO.		ILLINOIS	STATE	

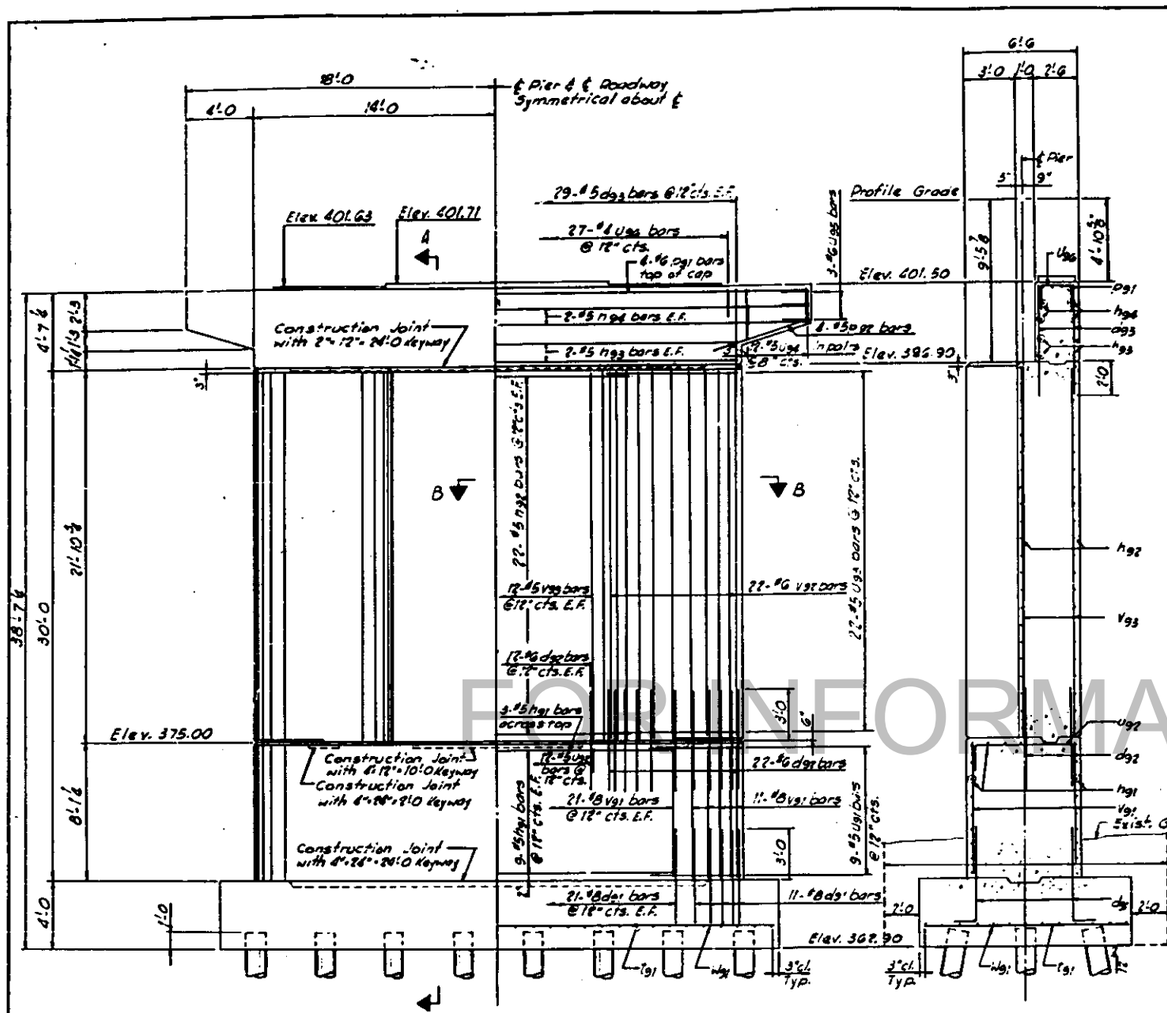

ELEVATION

SECTION A-A

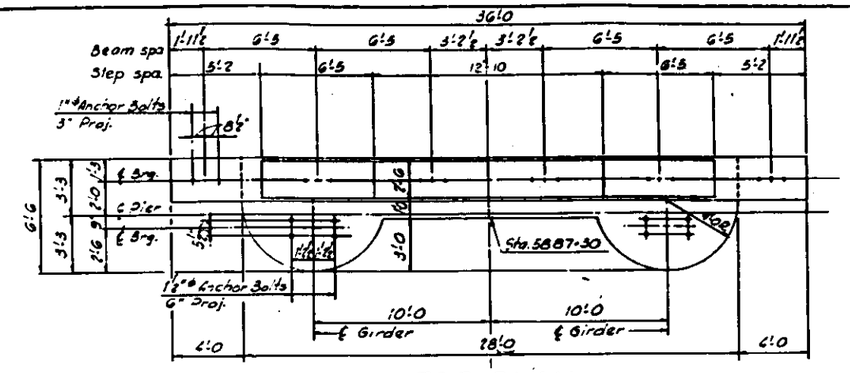

TOP PLAN

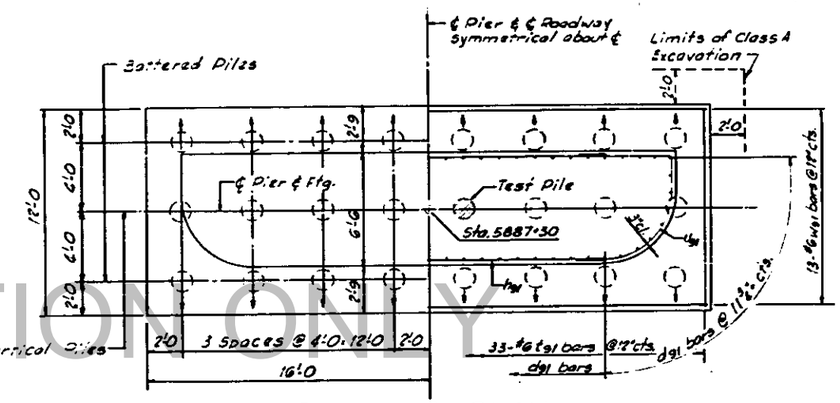

FOOTING PLAN

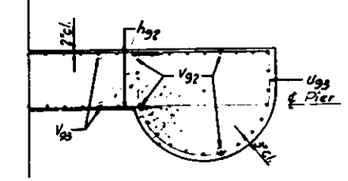

SECTION B-B

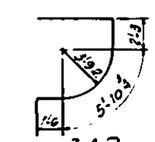

ug1 BAR

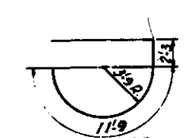

ug3 BAR

dg1 BAR

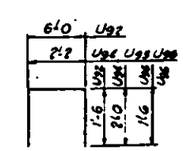

ug2, ug4, ug5 & ug6 BARS

Note:
All edges shall have standard ¾" chamfer except footing.

E.F. denotes Each Face

23-45 Ton Cap. Metal Shell Piles
Estimated Length = 55 Ft.

NOTE:
Quantities shown are for one (1) Pier W.B. only. East Bound Pier is same except:

Class A Excavation	Cu. Yds.	149

BILL OF MATERIAL

Bar	No.	Size	Length	Shape
dg1	66	8	6'-9	L
dg2	68	8	6'-0	—
dg3	58	5	6'-3	—
hg1	21	5	20'-0	—
hg2	22	5	15'-0	—
hg3	4	5	27'-9	—
hg4	4	5	35'-9	—
Pg1	4	6	33'-9	—
Pg2	8	5	5'-6	—
tg1	33	6	11'-6	—
ug1	18	5	15'-0	⌐
ug2	24	5	9'-0	⊔
ug3	22	5	21'-9	⊔
ug4	24	5	6'-2	⊓
ug5	6	6	5'-2	⊓
ug6	27	4	5'-2	⊓
vg1	64	8	7'-9	—
vg2	44	6	21'-6	—
vg3	26	5	21'-6	—
wg1	13	6	31'-6	—

Reinforcement Bars	Lbs.	10,070
Class A Concrete	Cu. Yds.	230.0
Class A Excavation	Cu. Yds.	77
18" ϕ Metal Shell Piles	Lin. Ft.	1265
Metal Shell Test Pile	Each	1

Use for W.B. & E.B. Structures.

CONSOER, TOWNSEND & ASSOCIATES
CONSULTING ENGINEERS CHICAGO, ILLINOIS

ILLINOIS DIVISION OF HIGHWAYS
FAI ROUTE 64 BRIDGE OVER WABASH RIVER
F.A.I. 64 SECTION 97-3B
WHITE COUNTY, ILLINOIS
POSEY COUNTY, INDIANA

PIER NO. 8

DESIGNED | DRAWN | TRACED | CHECKED | REVIEWED | DATE | REVISED
DMP

FOR INFORMATION ONLY

F.A.I. RTE. NO.	SECTION	COUNTY	TOTAL SHEETS	SHEET NO.
64	97-38	White	103	30
FEDERAL ROAD DISTRICT NO.		ILLINOIS	FEDERAL	

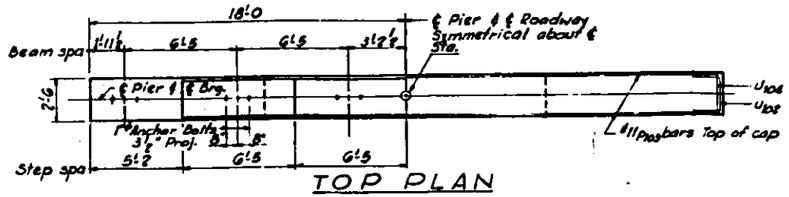

TOP PLAN

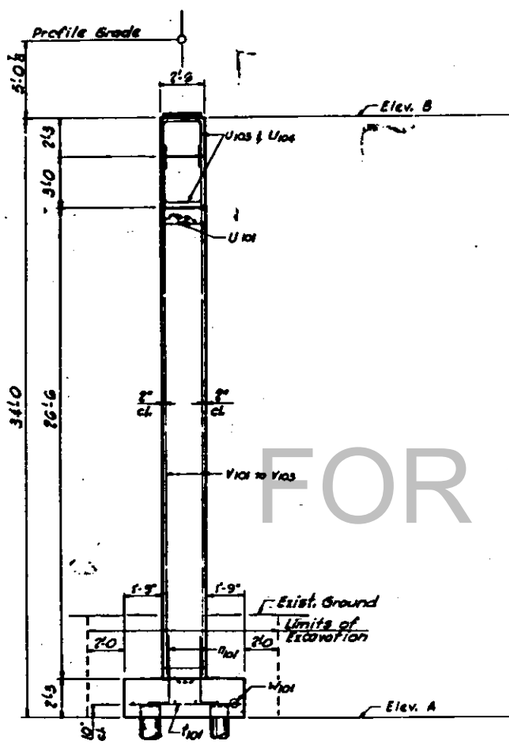

END VIEW

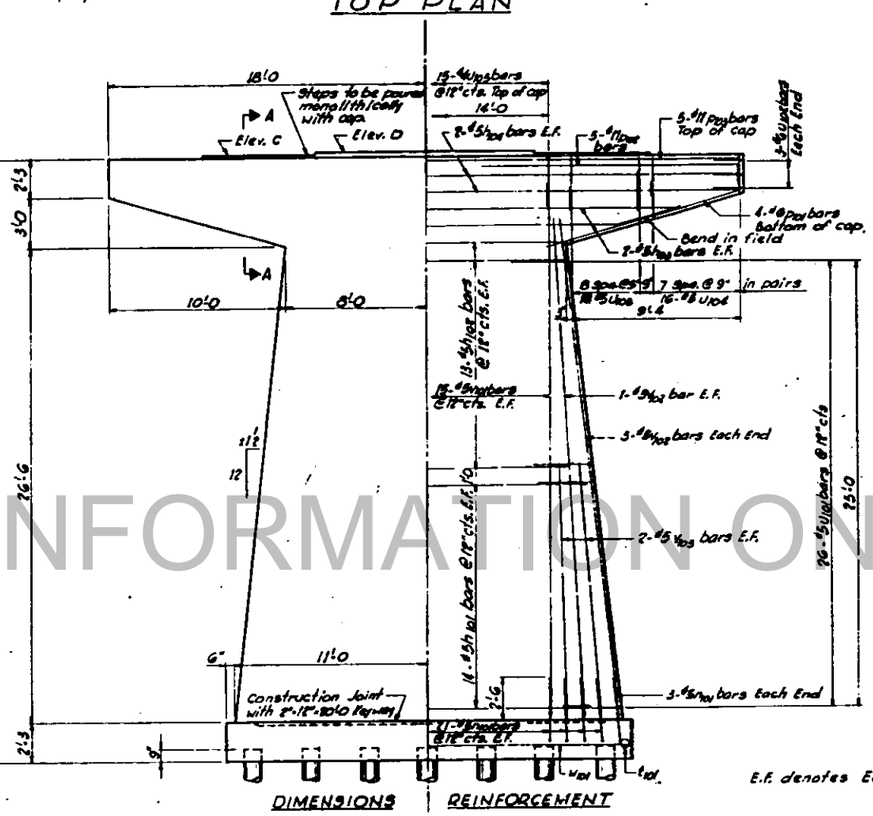

DIMENSIONS REINFORCEMENT

ELEVATION

Note:
All edges shall have standard ¾" chamfer except footings.

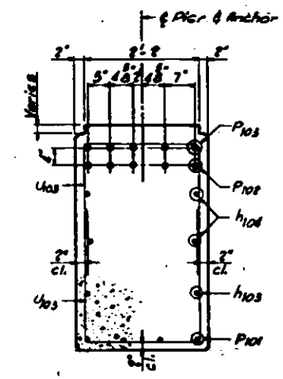

SECTION A-A

Note:
Space reinforcing bars to clear anchor bolts.

E.F. denotes Each Face

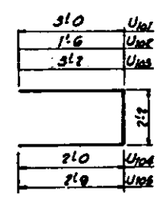

u BARS

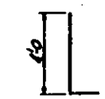

n101 BAR

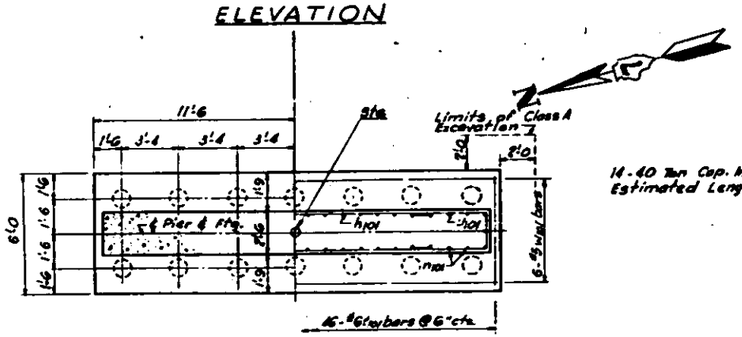

FOOTING PLAN

14-40 Ton Cap. Metal Shell Piles
Estimated Length = 50 ft. (Pier 9)
40 ft. (Pier 15)

TABLE OF ELEVATIONS AND STATIONS

Pier	Elevation A	B	C	D	Station
9	397.18	401.12	401.28	401.32	5887+97
15	365.72	399.11	399.85	399.92	5892+63

BILL OF MATERIAL

Bar	No.	Size	Length	Shape
h101	18	5	18'-0	
h102	26	5	15'-9	
h103	4	5	29'-0	
h104	4	5	39'-9	
n101	48	5	5'-0	L
P101	8	6	11'-6	
P102	10	11	14'-6	
P103	5	11	38'-9	
t101	46	6	3'-6	
U101	32	5	8'-2	
U102	12	6	3'-7	
U103	36	5	8'-6	
U104	32	5	6'-2	
U105	15	4	7'-8	
V101	30	5	30'-8	
V102	10	5	28'-0	
V103	8	5	13'-0	
w101	6	8	22'-8	
Reinforcement Bars			Lbs.	6510
Class X Concrete			Cu. Yds.	72.7
Class A Excavation			Cu. Yds.	80.3
14" Metal Shell Piles			Lin. Ft.	700
Quantities shown are the sum of Pier 9 and Pier 15 except:				
Class A Excavation			Cu. Yds.	70
14" Metal Shell Piles			Lin. Ft.	[illegible]
Use for U.S.E.D. Structures				

CONSOER, TOWNSEND & ASSOCIATES
CONSULTING ENGINEERS CHICAGO, ILLINOIS

ILLINOIS DIVISION OF HIGHWAYS
FAI ROUTE 64 BRIDGE OVER WABASH RIVER
F.A.I. 64 SECTION 97-38
WHITE COUNTY, ILLINOIS
POSEY COUNTY, INDIANA

PIERS NO. 9 & 15

FOR INFORMATION ONLY

F.A.I. Rte. No.	Section	County	Total Sheets	Sheet No.
64	97-38	White	103	31
Federal Aid District No.		Illinois		

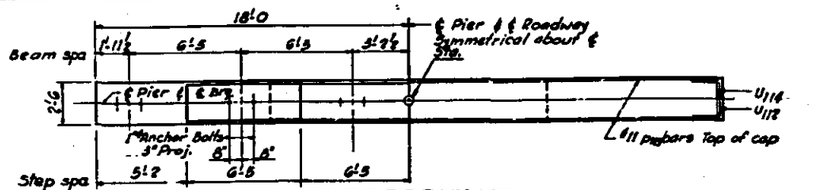

TOP PLAN

END VIEW

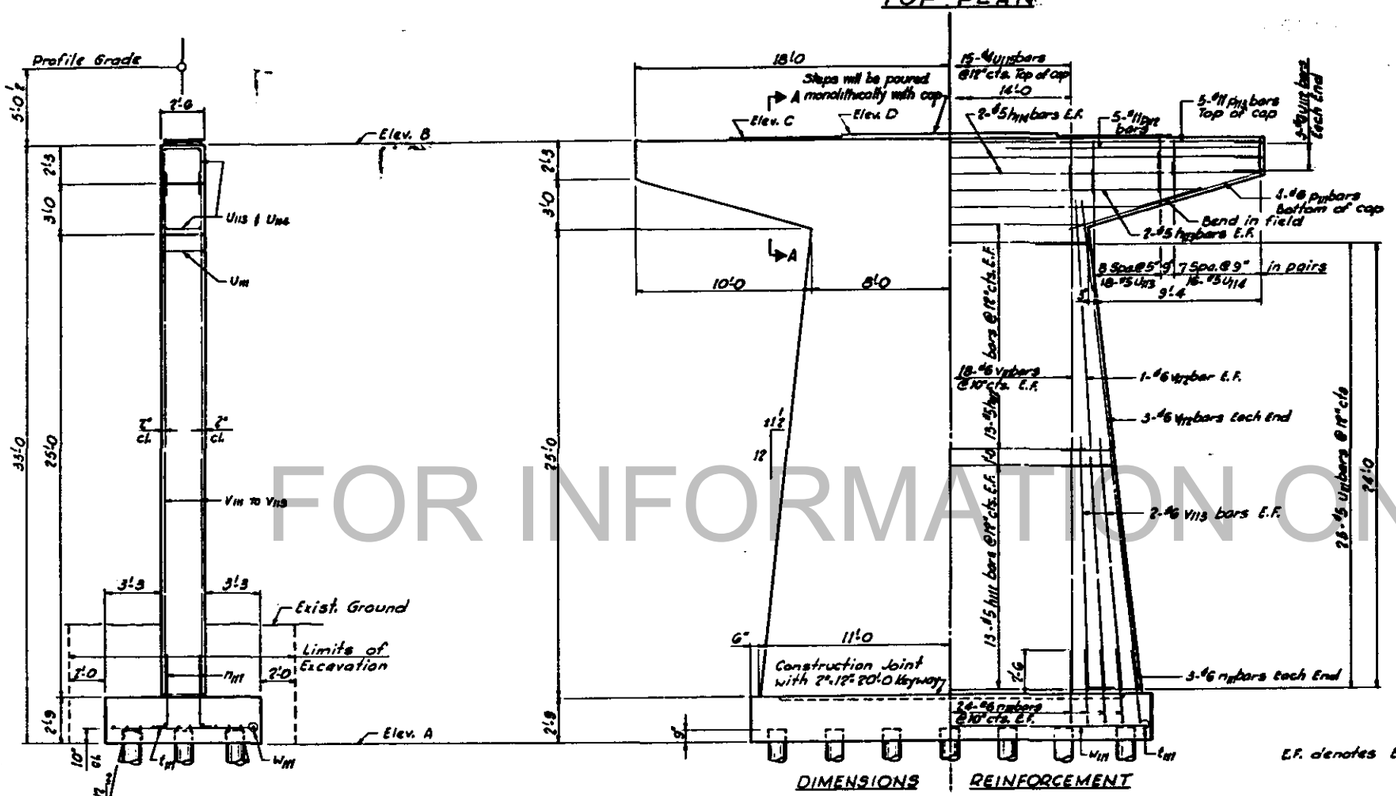

DIMENSIONS REINFORCEMENT

ELEVATION

Note:
All edges shall have standard ¾" chamfer except footings.

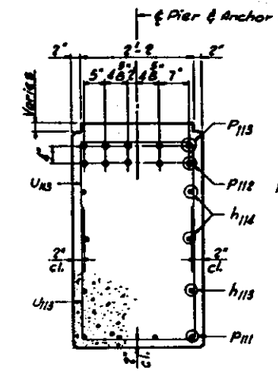

SECTION A-A

Note:
Space reinforcing bars to clear anchor bolts.

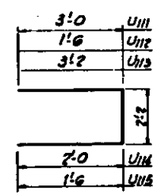

u BARS

n111 BAR

E.F. denotes Each Face.

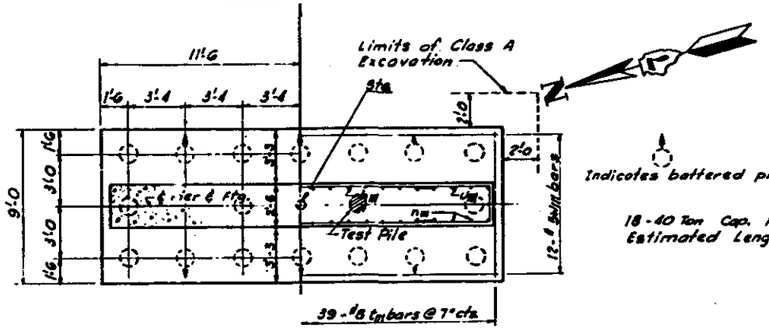

FOOTING PLAN

Indicates battered pile

18-40 Ton Cap. Metal Shell Piles
Estimated Length: 50 ft. (Pier 10)
40 ft. (Pier 14)

Use for W.B. & E.B. Structures.

TABLE OF ELEVATIONS AND STATIONS

Pier	Elevation A	Elevation B	Elevation C	Elevation D	Station
10	367.90	400.90	401.03	401.10	5888+00
14	367.00	400.00	400.13	400.20	5891+00

BILL OF MATERIAL

Bar	No.	Size	Length	Shape
h111	26	5	18'-0	—
h112	26	5	15'-9	—
h113	4	5	29'-0	—
h114	4	5	35'-9	—
n111	54	6	5'-6	L
P111	8	6	11'-6	—
P112	10	11	14'-6	—
P113	5	11	35'-9	—
t111	39	8	8'-6	—
U111	50	5	8'-2	U
U112	6	6	5'-2	U
U113	36	5	8'-6	U
U114	32	5	6'-2	U
U115	15	4	7'-8	U
V111	38	6	28'-9	—
V112	10	6	26'-6	—
V113	8	6	13'-0	—
W111	12	5	22'-6	—

Reinforcement Bars	Lbs.	7870
Class X Concrete	Cu. Yds.	79.6
Class A Excavation	Cu. Yds.	78
14" ø Metal Shell Piles	Lin. Ft.	900
Metal Shell Test Pile	Each	1

Quantities shown are for one (1) Pier 10.
Quantities for one (1) Pier 14 are same, except:

14" ø Metal Shell Piles	Lin. Ft.	720

CONSOER, TOWNSEND & ASSOCIATES
CONSULTING ENGINEERS CHICAGO, ILLINOIS

ILLINOIS DIVISION OF HIGHWAYS
F.A.I. ROUTE 64 BRIDGE OVER WABASH RIVER
F.A.I. 64 SECTION 97-38
WHITE COUNTY, ILLINOIS
POSEY COUNTY, INDIANA

PIERS NO. 10 & 14

Drawn | Traced | Checked | Drawn

FOR INFORMATION ONLY

F.A.I. RTE. NO.	SECTION	COUNTY	TOTAL SHEETS	SHEET NO.
64	97-3B	White	103	32
FEDERAL AID PROJECT NO.			PLANNING	FINAL

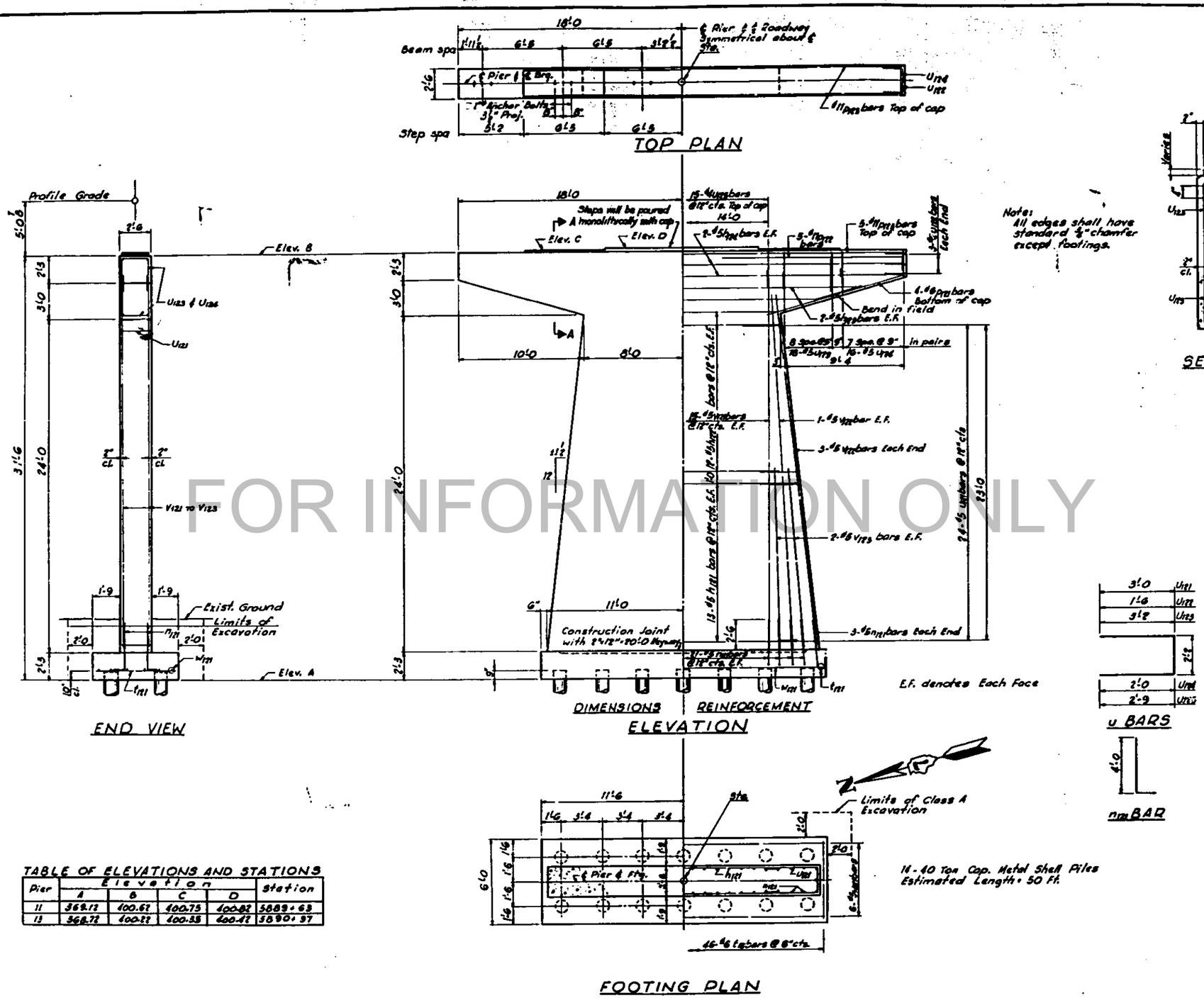

Note: All edges shall have standard ¾" chamfer except footings.

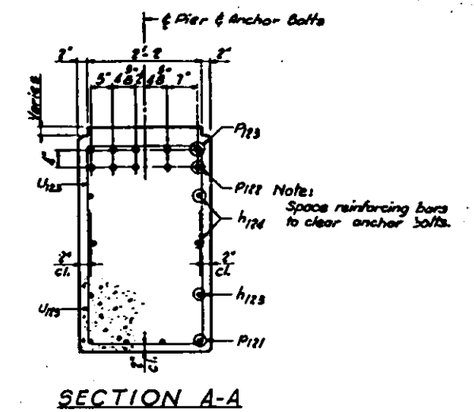

TABLE OF ELEVATIONS AND STATIONS

Pier	Elevation A	Elevation B	Elevation C	Elevation D	Station
11	369.12	400.67	400.75	400.82	5889+63
13	368.72	400.22	400.55	400.42	5890+37

BILL OF MATERIAL

Bar	No.	Size	Length	Shape
h_{121}	26	5	18'-0	
h_{122}	24	5	15'-9	
h_{123}	4	5	28'-0	
h_{124}	4	5	35'-9	
n_{121}	48	5	5'-0	
P_{121}	8	6	11'-6	
P_{122}	10	11	14'-6	
P_{123}	5	11	35'-9	
t_{121}	46	6	5'-6	
U_{121}	48	5	8'-2	
U_{122}	6	6	5'-2	
U_{123}	36	5	8'-6	
U_{124}	32	5	6'-2	
U_{125}	13	4	7'-8	
V_{121}	30	5	27'-9	
V_{122}	10	5	25'-6	
V_{123}	8	5	13'-0	
w_{121}	6	5	22'-6	
Reinforcement Bars			Lbs.	6100
Class X Concrete			Cu. Yds.	68.4
Class A Excavation			Cu. Yds.	39
14" Metal Shell Piles			Lin. Ft.	700

Quantities shown are for one (1) Pier.

Use for W.B. & E.B. Structures.

CONSOER, TOWNSEND & ASSOCIATES
CONSULTING ENGINEERS CHICAGO, ILLINOIS

ILLINOIS DIVISION OF HIGHWAYS
FAI ROUTE 64 BRIDGE OVER WABASH RIVER
F.A.I. 64 SECTION 97-3B
WHITE COUNTY, ILLINOIS
POSEY COUNTY, INDIANA

PIERS NO. 11 & 13

DMP | DMP

FOR INFORMATION ONLY

F.A.I. RTE. NO.	SECTION	COUNTY	TOTAL SHEETS	SHEET NO.
64	97-3B	White	103	33
FEDERAL ROAD DISTRICT NO.		ILLINOIS	FINAL	

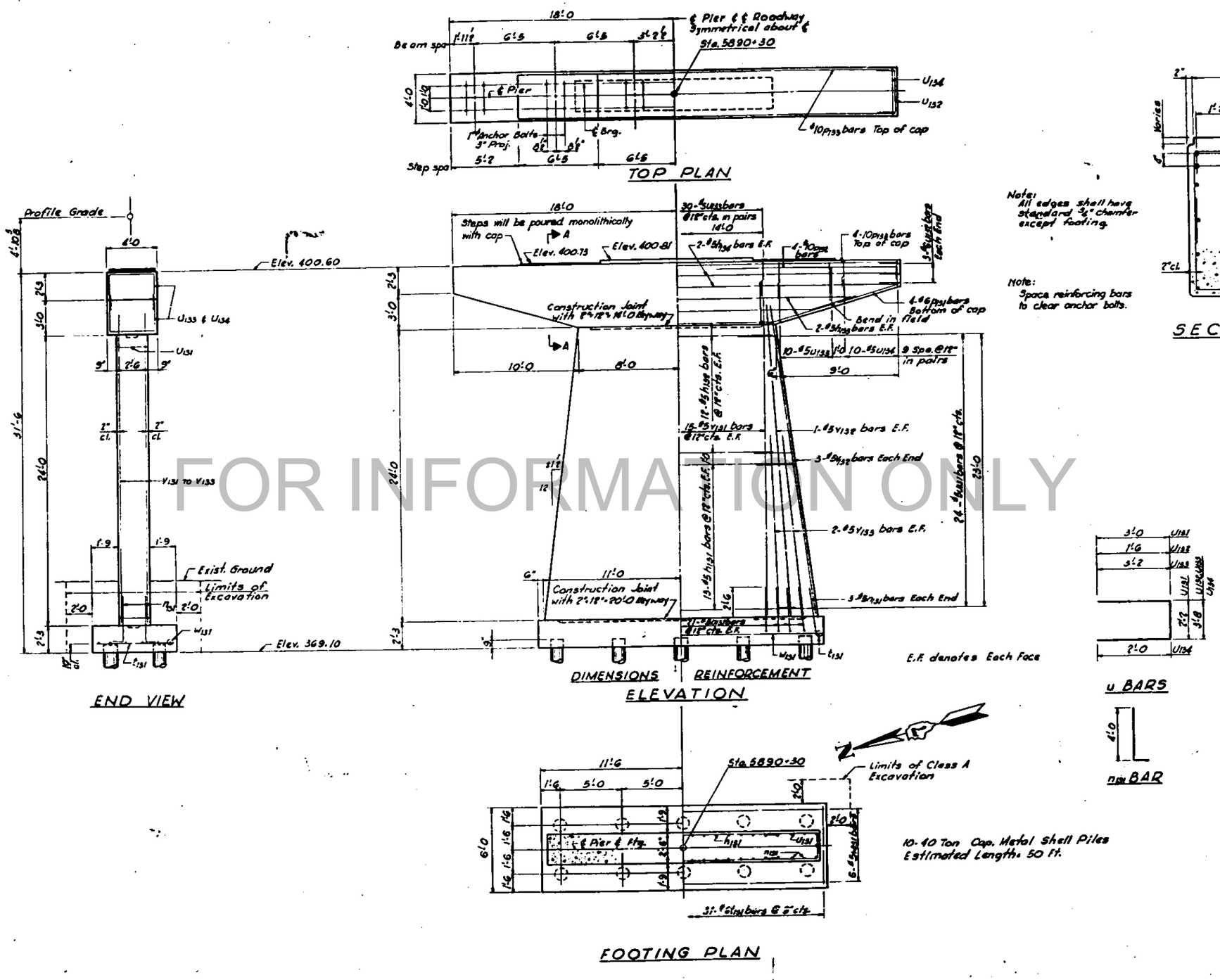

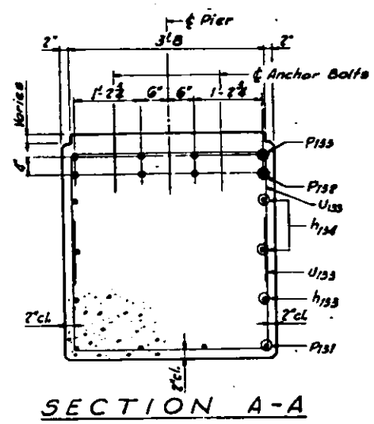

SECTION A-A

Note:
All edges shall have standard ¾" chamfer except footing.

Note:
Space reinforcing bars to clear anchor bolts.

BILL OF MATERIAL				
Bar	No.	Size	Length	Shape
h131	26	5	18'-0	—
h132	28	5	15'-9	—
h133	4	5	29'-0	—
h134	4	5	35'-9	—
n131	48	5	5'-0	L
P131	8	6	11'-6	—
P132	8	10	14'-6	—
P133	4	10	38'-9	—
U131	31	6	5'-6	—
U132	48	5	6'-2	
U133	8	6	6'-8	
U133	30	5	10'-0	
U134	20	5	7'-8	
V131	30	5	26'-0	—
V132	10	5	25'-6	—
V133	8	5	15'-0	—
W131	6	5	22'-6	—
Reinforcement Bars			Lbs.	3410
Class X Concrete			Cu. Yds.	77.7
Class A Excavation			Cu. Yds.	39
40-Ton Metal Shell Piles			Lin. Ft.	500

Quantities shown are for one (1) Pier

Use for W.B. & E.B. Structures.

CONSOER, TOWNSEND & ASSOCIATES
CONSULTING ENGINEERS CHICAGO, ILLINOIS

ILLINOIS DIVISION OF HIGHWAYS
FAI ROUTE 64 BRIDGE OVER WABASH RIVER
F.A.I. 64 SECTION 97-3B
WHITE COUNTY, ILLINOIS
POSEY COUNTY, INDIANA

PIER NO. 12

FOR INFORMATION ONLY

F.A.I. RTE. NO.	SECTION	COUNTY	TOTAL SHEETS	SHEET NO.
64	97-38	White	103	34
FEDERAL ROAD DISTRICT NO.		STATE	ILLINOIS	

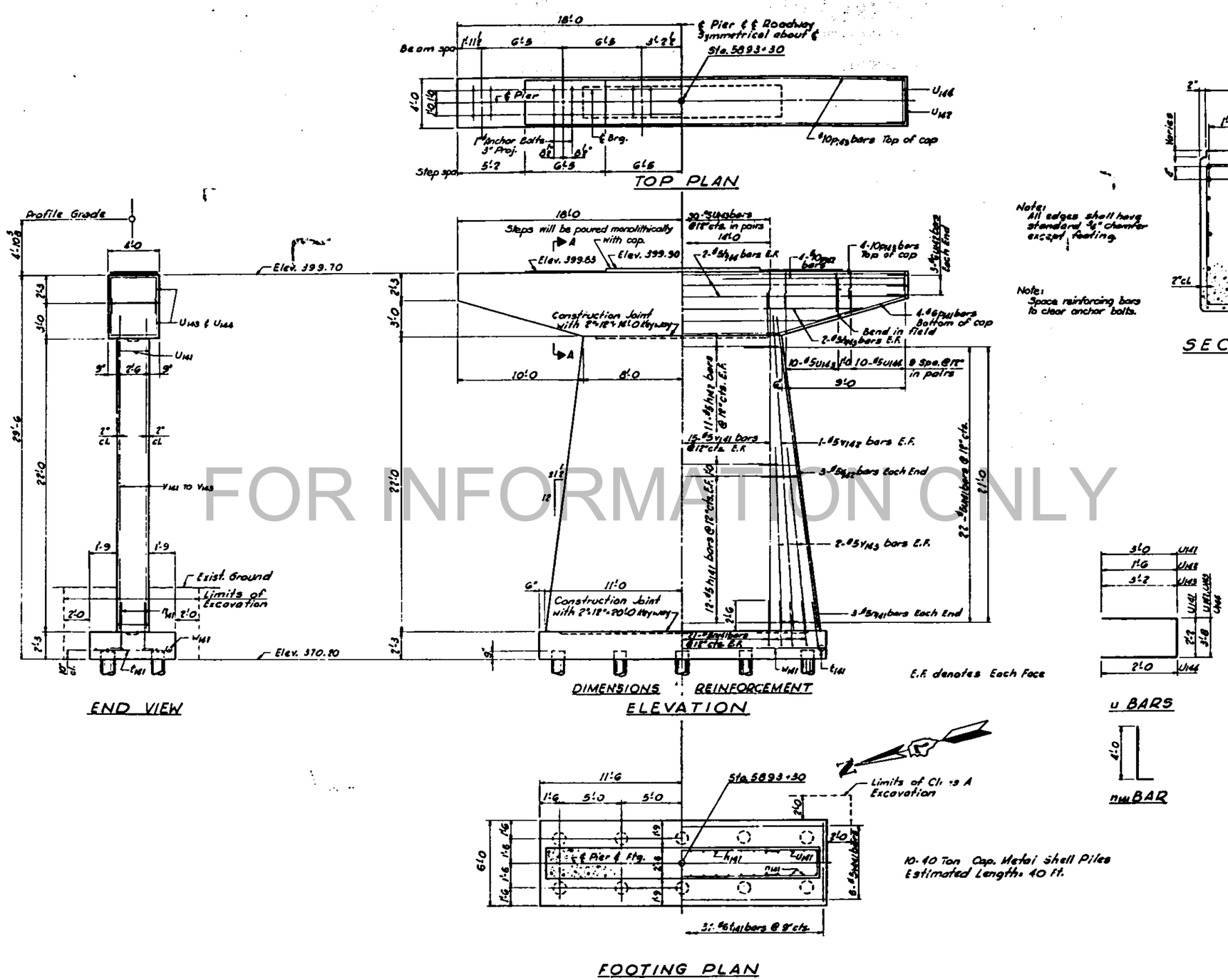

FOR INFORMATION ONLY

BILL OF MATERIAL

Bar	No.	Size	Length	Shape
h141	24	5	18'-0	—
h142	28	5	15'-9	—
h143	4	5	29'-0	—
h144	4	5	35'-9	—
n141	48	5	5'-0	L
P141	6	6	11'-6	—
P142	8	10	14'-6	—
P143	4	10	35'-9	—
U141	31	6	5'-6	—
U142	44	5	6'-2	U
U143	6	6	6'-8	U
U144	50	5	10'-0	U
U144	20	5	7'-8	U
Y141	30	5	24'-0	—
Y142	10	5	23'-6	—
Y143	8	5	15'-0	—
W141	6	5	27'-6	—
Reinforcement Bars			Lbs.	5220
Class X Concrete			Cu. Yds.	74.1
Class A Excavation			Cu. Yds.	43
14" Metal Shell Piles			Lin. Ft.	400

Quantities shown are for one (1) Pier

Use for W.B. & E.B. Structures.

CONSOER, TOWNSEND & ASSOCIATES
CONSULTING ENGINEERS CHICAGO, ILLINOIS

ILLINOIS DIVISION OF HIGHWAYS
F.A.I. ROUTE 64 BRIDGE OVER WABASH RIVER
F.A.I. 64 SECTION 97-38
WHITE COUNTY, ILLINOIS
POSEY COUNTY, INDIANA

PIER NO. 16

DMP | DMP

F.A.I. RTE. NO.	SECTION	COUNTY	TOTAL SHEETS	SHEET NO.
64	97-3B	White	103	35
FEDERAL ROAD DISTRICT NO.		STATE ILLINOIS	FIELD	

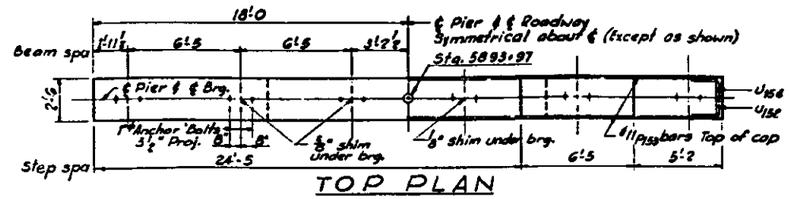

TOP PLAN

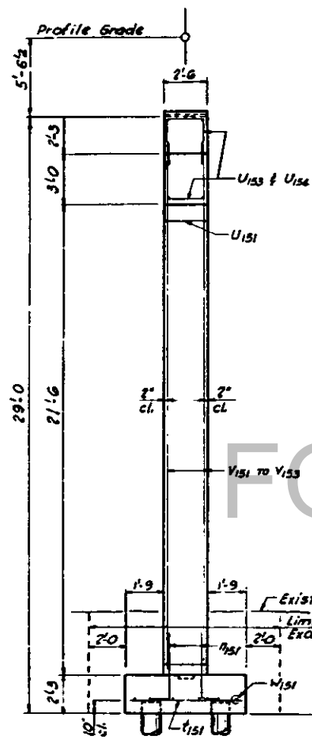

END VIEW

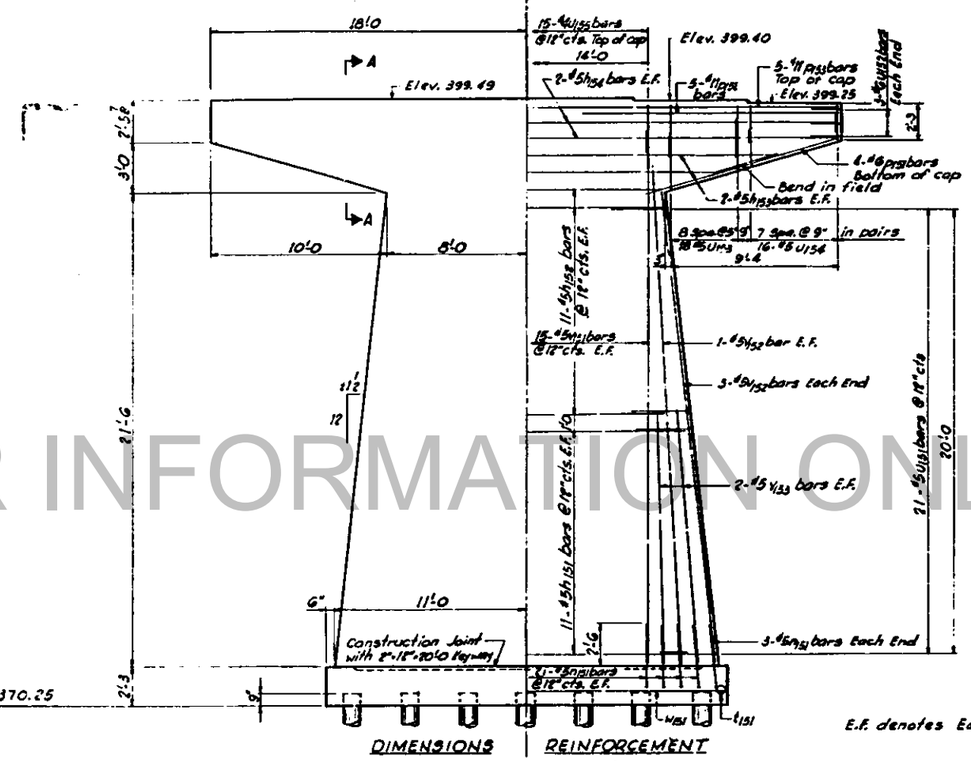

DIMENSIONS REINFORCEMENT

ELEVATION

E.F. denotes Each Face

Note:
All edges shall have standard ¾" chamfer except footings.

Note:
Space reinforcing bars to clear anchor bolts.

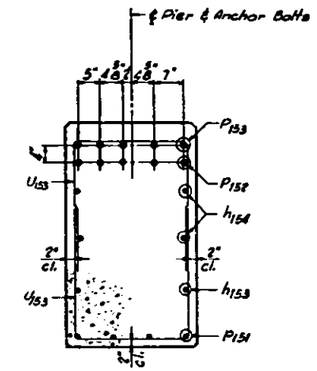

SECTION A-A

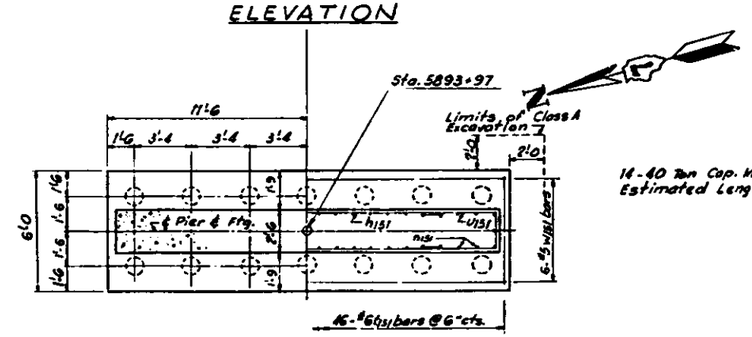

FOOTING PLAN

16-40 Ton Cap. Metal Shell Piles
Estimated Length = 50 Ft.

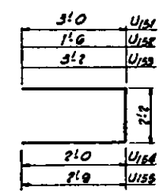

u BARS

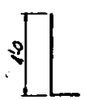

n151 BAR

BILL OF MATERIAL

Bar	No.	Size	Length	Shape
h151	22	5	18'-0	—
h152	22	5	15'-9	—
h153	4	5	29'-0	—
h154	4	5	35'-9	—
n151	48	5	5'-0	L
P151	8	6	11'-6	—
P152	10	11	14'-6	—
P153	5	11	35'-9	—
t151	46	6	5'-6	—
U151	42	5	8'-2	U
U152	6	6	5'-2	U
U153	36	5	8'-6	U
U154	32	5	6'-2	U
U155	15	4	7'-8	U
V151	30	5	25'-3	—
V152	10	5	23'-0	—
V153	8	5	12'-0	—
W151	6	5	22'-6	—

Reinforcement Bars	Lbs.	5810
Class X Concrete	Cu. Yds.	63.8
Class A Excavation	Cu. Yds.	57
16"ø Metal Shell Piles	Lin. Ft.	700

Quantities shown are for one (1) Pier

Use for W.B. & E.B. Structures.

CONSOER, TOWNSEND & ASSOCIATES
CONSULTING ENGINEERS CHICAGO, ILLINOIS

ILLINOIS DIVISION OF HIGHWAYS
FAI ROUTE 64 BRIDGE OVER WABASH RIVER
F.A.I. 64 SECTION 97-3B
WHITE COUNTY, ILLINOIS
POSEY COUNTY, INDIANA

PIER NO. 17

DMP DMP

FOR INFORMATION ONLY

F.A.I. RTE. NO.	SECTION	COUNTY	TOTAL SHEETS	SHEET NO.
64	97-3B	White	103	36
FEDERAL AID PROJECT NO.		PLANNED	FINAL	

DIMENSIONS

Pier	A	B	C	D	X	Y	∠
18 W.B.	3'-1½	3'-3½	2'-0¾	1'-10¾	1/16"	8"	89°46'05" — 43° "
18 E.B.	3'-1 5/16	3'-3 11/16	2'-0 11/16	1'-10 5/16	1/16"	8"	89°43'39" — 43°15' "
22 W.B.	3'-1 15/16	3'-3 1/16	2'-0 1/16	1'-10 15/16	7/16"	8"	86°46'17"
22 E.B.	3'-2⅛	3'-2⅞	1'-11⅞	1'-11⅛	7/16"	8"	86°48'50"
26 W.B.	3'-0¾	3'-4¼	2'-1¼	1'-9¾	⅞"	7 13/16"	83°46'17"
26 E.B.	3'-3 5/16	3'-1 11/16	1'-10 11/16	2'-0 5/16	⅞"	7 13/16"	85°48'51"

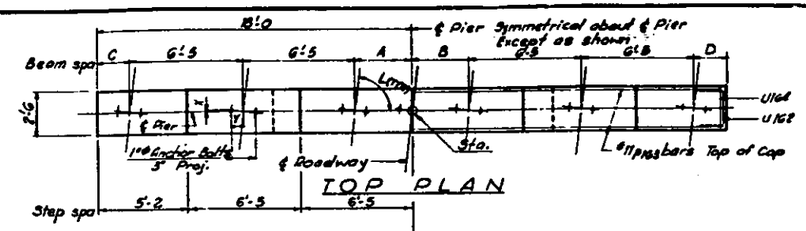

TOP PLAN

Note: Space reinforcing bars to clear anchor bolts.

Note: All edges shall have standard ¾" chamfer except footing.

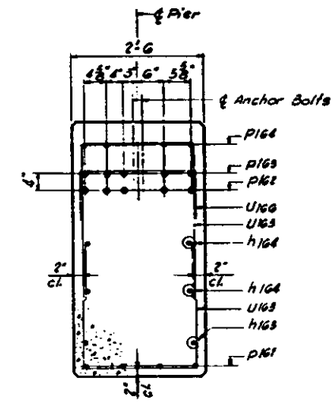

SECTION A-A

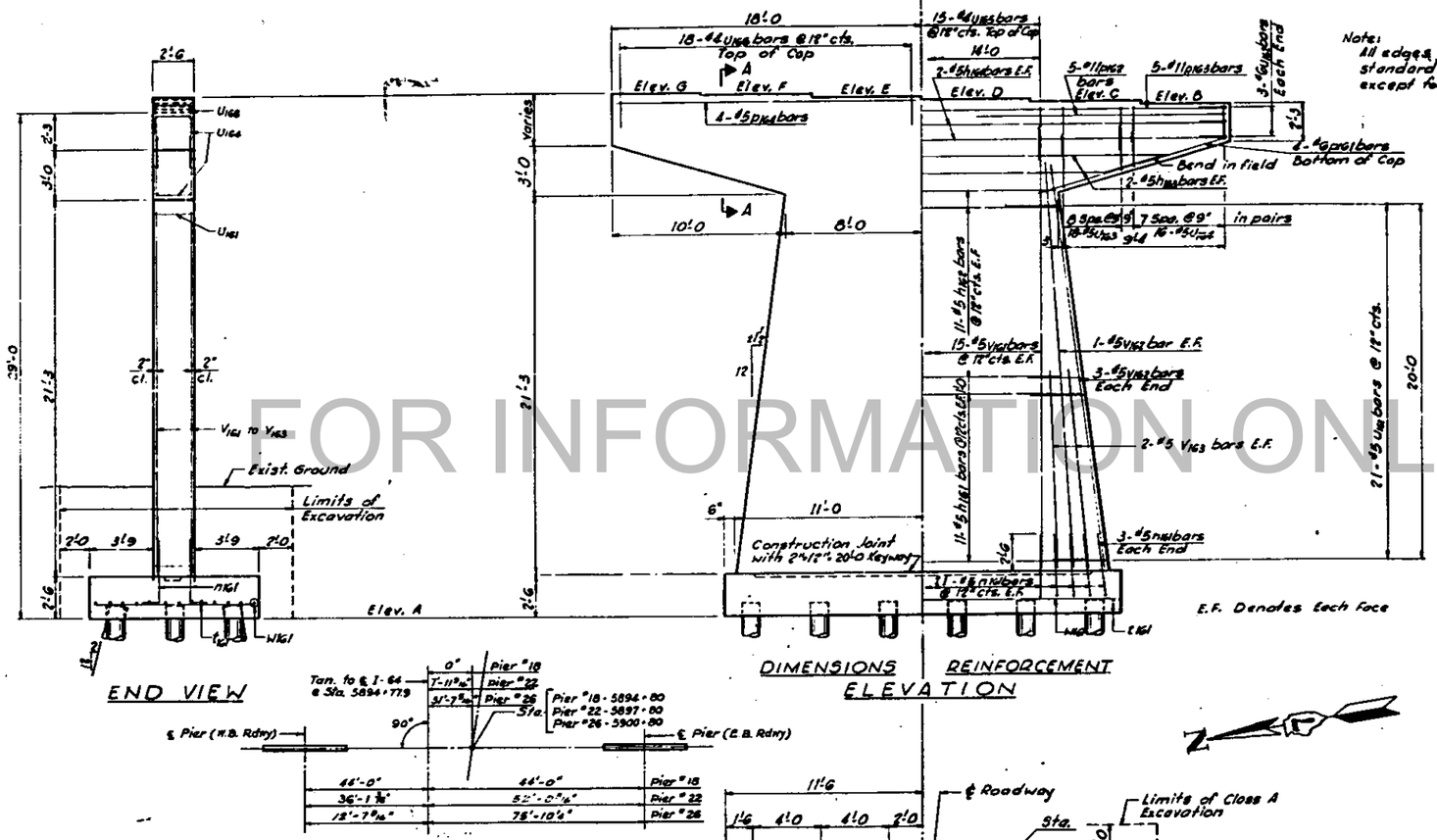

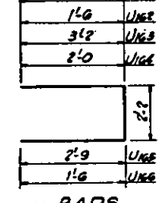

u BARS

n161 BAR

BILL OF MATERIAL

Bar	No.	Size	Length	Shape
h161	22	5	18'-0	
h162	22	5	15'-9	
h163	4	5	29'-0	
h164	4	5	35'-9	
n161	48	5	5'-0	L
P161	8	6	11'-6	
P162	10	11	13'-9	
P163	5	11	35'-9	
P164	4	5	17'-9	
t161	43	8	9'-6	
U161	42	5	8'-2	
U162	6	6	5'-2	
U163	36	5	8'-6	
U164	32	5	6'-2	
U165	15	6	7'-8	
U166	18	6	5'-2	
V161	30	5	23'-3	
V162	10	5	22'-0	
V163	8	5	12'-0	
W161	13	6	22'-6	
Reinforcement Bars			Lbs.	6910
Class X Concrete			Cu. Yds.	74.0
Class A Excavation			Cu. Yds.	73
14"ϕ Metal Shell Piles			Lin. Ft.	680
Metal Shell Test Pile			Each	1

TABLE OF ELEVATIONS AND STATIONS

Pier	Elevation A	B	C	D	E	F	G	Station
18 W.B.	369.93	398.93	399.10	399.25	399.37	399.46	399.54	5894+80.00 — 79.98"
18 E.B.	369.93	398.93	399.10	399.26	399.37	399.46	399.54	5894+80.00 — 80.01"
22 W.B.	368.96	397.96	398.14	398.32	398.50	398.68	398.86	5897+77.68
22 E.B.	368.95	397.95	398.13	398.31	398.49	398.67	398.85	5897+82.36
26 W.B.	368.07	397.07	397.28	397.43	397.61	397.79	397.97	5900+75.39
26 E.B.	368.05	397.05	397.23	397.41	397.59	397.77	397.95	5900+84.68

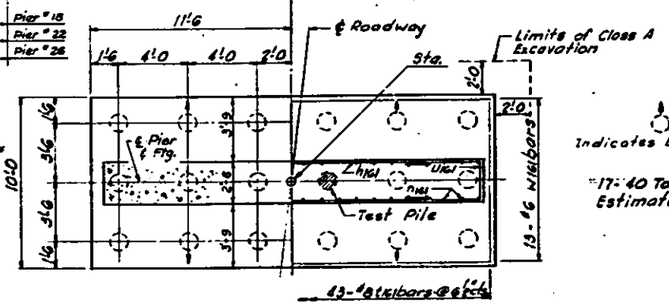

FOOTING PLAN

Indicates battered pile

*17'-40 Ton Cap. Metal Shell Piles Estimated Length: 40 Ft.

Note:
Quantities shown are for one (1) Pier 18.
Quantities for Piers 22 & 26 are the same, except:

Pier 22		
Class A Excavation	Cu. Yds.	98
Pier 26		
Class A Excavation	Cu. Yds.	126

Use for W.B. & E.B. Structures.

CONSOER, TOWNSEND & ASSOCIATES
CONSULTING ENGINEERS — CHICAGO, ILLINOIS

ILLINOIS DIVISION OF HIGHWAYS
FAI ROUTE 64 BRIDGE OVER WABASH RIVER
F.A.I. 64 SECTION 97-3B
WHITE COUNTY, ILLINOIS
POSEY COUNTY, INDIANA

PIERS NO. 18, 22 & 26

DMP — DMP

As Awarded. *As Built 6-7-66 L.W.

FOR INFORMATION ONLY

F.A.I. RTE. NO.	SECTION	COUNTY	TOTAL SHEETS	SHEET NO.
64	97-3B	White	103	37
PROPOSED ROAD DISTRICT NO.		ILLINOIS	FEDERAL	

DIMENSIONS

Pier	A	B	C	D	X	Y	Z
19 W.B.	3'-1 11/16	3'-3 5/16	2'-0 5/16	1'-10 11/16	3/16"	8"	88°-47'-08"
19 E.B.	3'-0 3/8	3'-1 5/8	2'-1 1/8	1'-9 7/8	3/16"	8"	88°-47'-08"
21 W.B.	3'-2 1/4	3'-2 1/4	1'-11 1/4	1'-11 1/4	5/16"	8"	87°-34'-55"
21 E.B.	3'-2 5/16	3'-2 11/16	1'-11 11/16	1'-11 5/16	5/16"	8"	87°-34'-55"
23 W.B.	3'-1 9/16	3'-3 7/16	2'-0 7/16	1'-10 9/16	9/16"	8"	85°-58'-19"
23 E.B.	3'-1 1/2	3'-3 1/2	2'-0 1/2	1'-10 1/2	9/16"	8"	85°-55'-09"
25 W.B.	3'-1 3/4	3'-3 1/4	2'-0 1/4	1'-10 3/4	3/4"	7 15/16"	84°-34'-55"
25 E.B.	3'-3 1/16	3'-1 15/16	1'-10 15/16	2'-0 1/16	3/4"	7 15/16"	84°-34'-55"
27 W.B.	3'-0	3'-5	2'-2	1'-9	1"	7 13/16"	82°-58'-18"
27 E.B.	3'-3 1/8	3'-1 7/8	1'-10 7/8	2'-0 1/8	1"	7 13/16"	82°-51'-49"

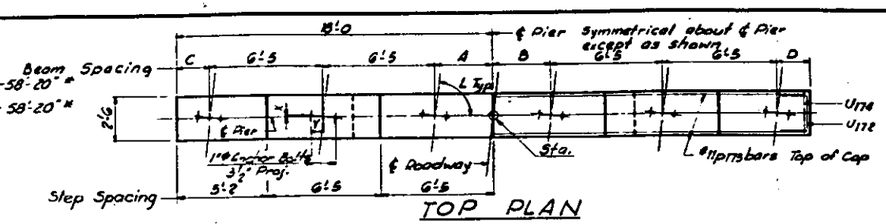

TOP PLAN

Note:
Space reinforcing bars to clear anchor bolts.

Note:
All edges shall have standard 3/4" chamfer except footing.

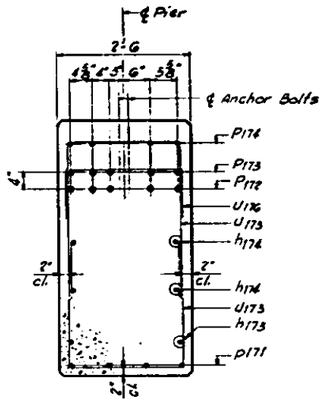

SECTION A-A

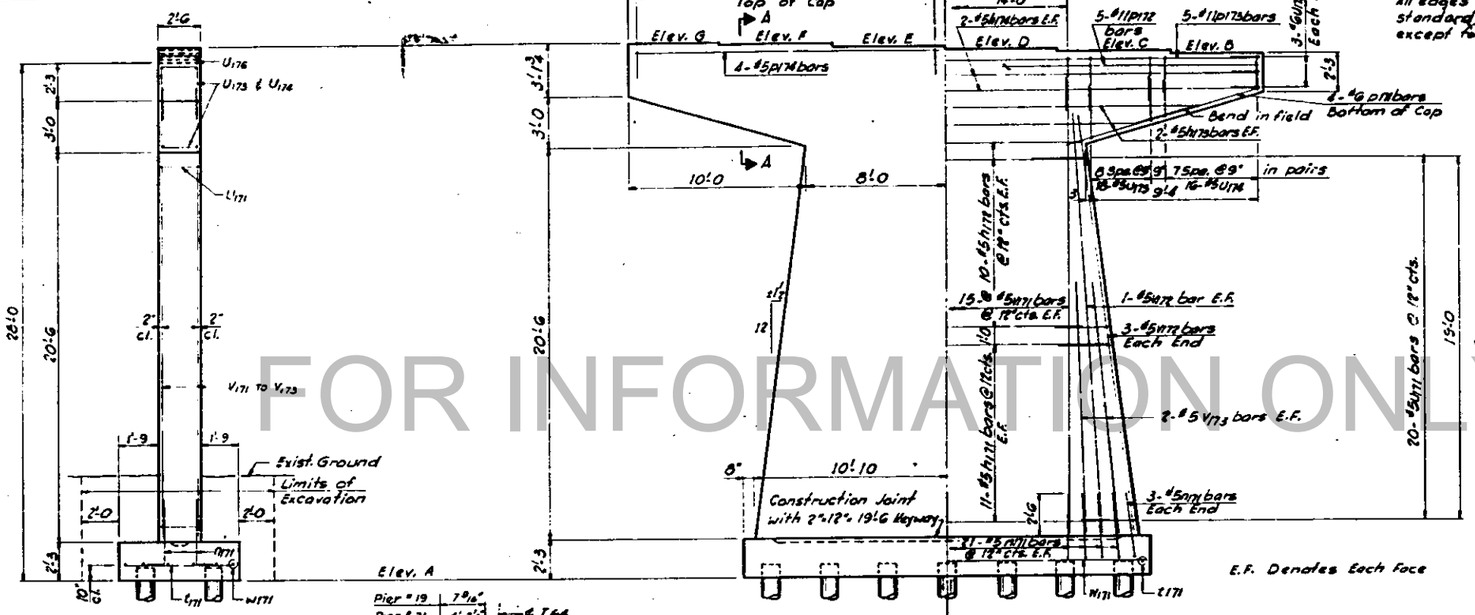

DIMENSIONS REINFORCEMENT
ELEVATION

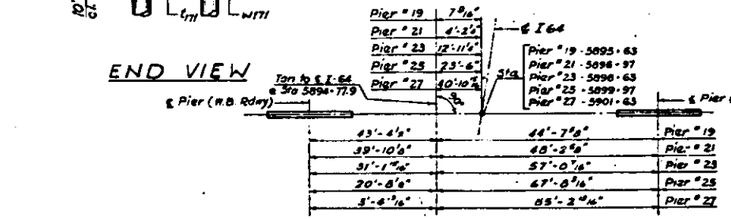

END VIEW

TABLE OF ELEVATIONS AND STATIONS

Pier	Elevation A	B	C	D	E	F	G	Station
19 W.B.	370.58	398.58	398.76	398.94	399.12	399.30	399.48	5895+62.35
19 E.B.	370.57	398.57	398.75	398.93	399.11	399.29	399.47	5895+63.66
21 W.B.	370.18	398.18	398.36	398.54	398.72	398.90	399.08	5896+95.33
21 E.B.	370.17	398.17	398.35	398.53	398.71	398.89	399.07	5896+96.70
23 W.B.	369.68	397.68	397.86	398.04	398.22	398.40	398.58	5898+60.06
23 E.B.	369.67	397.67	397.85	398.03	398.21	398.39	398.57	5898+65.96
25 W.B.	369.29	397.29	397.47	397.65	397.83	398.01	398.19	5899+93.03
25 E.B.	369.27	397.27	397.45	397.63	397.81	397.99	398.17	5900+01.03
27 W.B.	368.79	396.79	396.97	397.15	397.33	397.51	397.69	5901+57.75
27 E.B.	368.76	396.76	396.94	397.12	397.30	397.48	397.66	5901+68.33

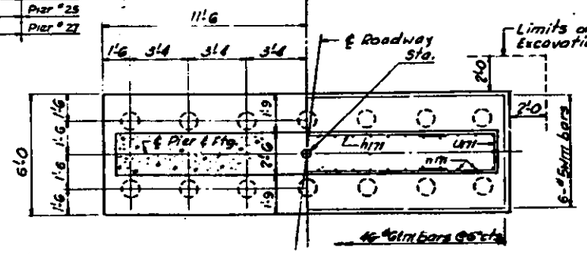

FOOTING PLAN

14-40 Ton Cap. Metal Shell Piles
Estimated Length = 40 Ft. (Piers 19, 21, 25 & 27)
50 Ft. (Pier 23)

Note:
Quantities shown are for one (1) Pier 19.
Quantities for Piers 21, 23, 25 & 27 are same, except:

Pier 21	Class A Excavation	Cu. Yds.	58
Pier 23	Class A Excavation	Cu. Yds.	63
	14-40 Metal Shell Piles	Lin. Ft.	700
Pier 25	Class A Excavation	Cu. Yds.	77
Pier 27	Class A Excavation	Cu. Yds.	92

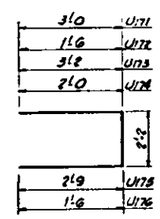

u BARS

n171 BAR

BILL OF MATERIAL

Bar	No.	Size	Length	Shape
h171	22	5	18'-0	—
h172	20	5	15'-9	—
h173	4	5	29'-0	—
h174	4	5	35'-9	—
n171	48	5	5'-0	L
p171	8	6	11'-6	—
P172	10	11	14'-6	—
P173	5	11	35'-9	—
P174	4	5	17'-9	—
t171	46	6	5'-6	—
U171	40	5	8'-2	U
U172	6	6	5'-2	U
U173	36	5	8'-6	U
U174	32	5	6'-2	U
U175	15	6	7'-6	U
U176	18	6	5'-2	U
V171	30	5	28'-3	—
V172	10	5	28'-0	—
V173	8	5	18'-0	—
W171	6	5	28'-0	—

Reinforcement Bars	Lbs.	5860
Class X Concrete	Cu. Yds.	63.1
Class A Excavation	Cu. Yds.	56
14-40 Metal Shell Piles	Lin. Ft.	360

Use for W.B. & E.B. Structures.

CONSOER, TOWNSEND & ASSOCIATES
CONSULTING ENGINEERS CHICAGO, ILLINOIS

ILLINOIS DIVISION OF HIGHWAYS
FAI ROUTE 64 BRIDGE OVER WABASH RIVER
F.A.I. 64 SECTION 97-3B
WHITE COUNTY, ILLINOIS
POSEY COUNTY, INDIANA

PIERS NO. 19, 21, 23, 25 & 27

DRAWN | TRACED | CHECKED | DATE | SUBMITTED

FOR INFORMATION ONLY

As Awarded. * As Built. 6-7-66 L.W.

DIMENSIONS

Pier	A	B	C	D	E	F	α	β
20 W.B.	5/8"	8 1/2"	1/4"	1/4"	8 1/2"	3/16"	88°13'40"	88°37'05"
20 E.B.	5/8"	8 1/2"	1/4"	1/4"	8 1/2"	3/16"	88°13'40"	88°37'05"
24 W.B.	1"	8 1/2"	11/16"	3/8"	8 1/2"	5/8"	85°13'40"	85°58'15"
24 E.B.	1"	8 1/2"	11/16"	3/8"	8 1/2"	5/8"	85°13'40"	85°55'05"

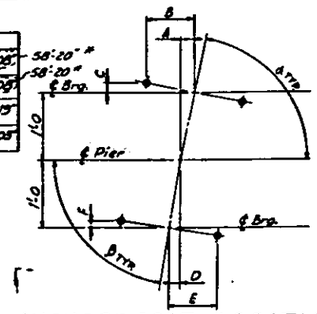

ANCHOR BOLT LOCATION

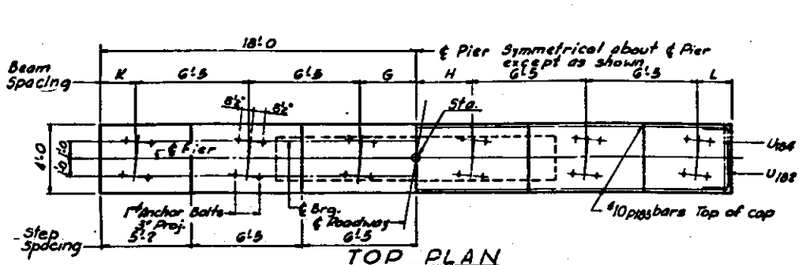

TOP PLAN

DIMENSIONS

Pier	G	H	K	L
20 W.B.	3'-3 13/16"	3'-1 9/16"	1'-10 13/16"	2'-0 13/16"
20 E.B.	3'-3 13/16"	3'-1 13/16"	1'-10 13/16"	2'-0 13/16"
24 W.B.	3'-3 3/8"	3'-1 3/8"	1'-10 5/8"	2'-0 5/8"
24 E.B.	3'-3 11/16"	3'-1 9/16"	1'-10 5/8"	2'-0 11/16"

Note:
Space reinforcing bars to clear anchor bolts.

Note:
All edges shall have standard 3/4" chamfer except footing.

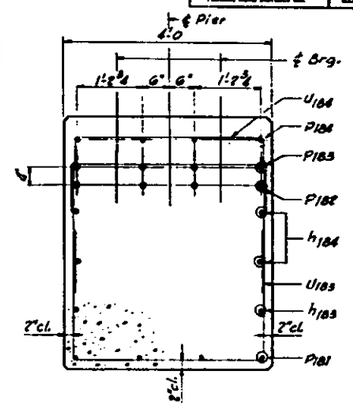

SECTION A-A

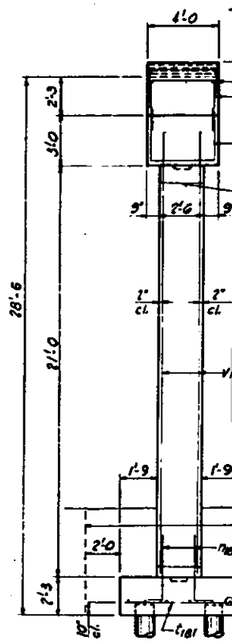

END VIEW

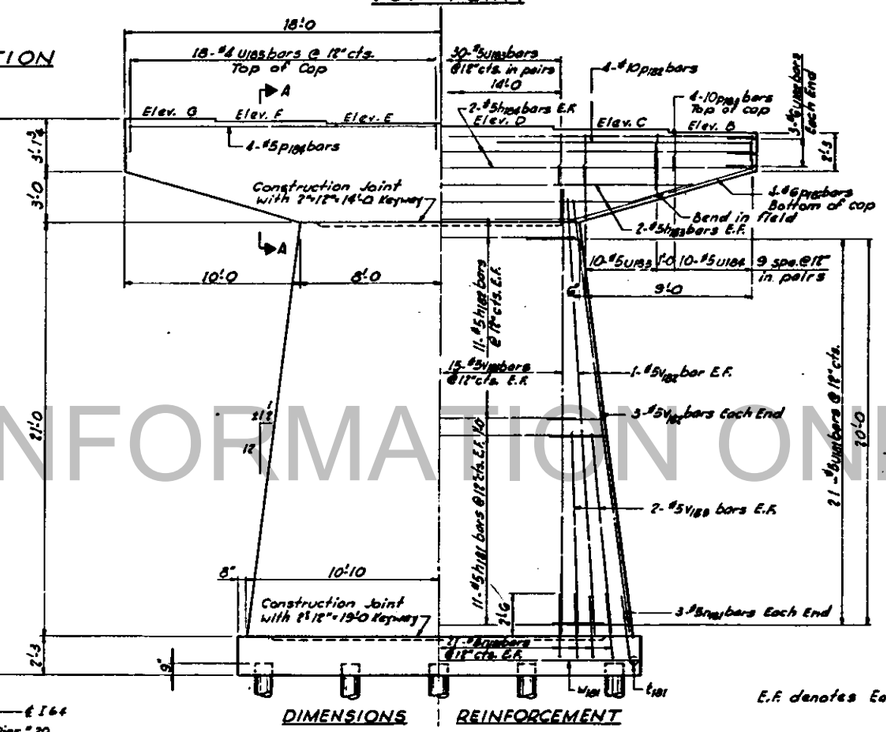

DIMENSIONS REINFORCEMENT

ELEVATION

E.F. denotes Each Face

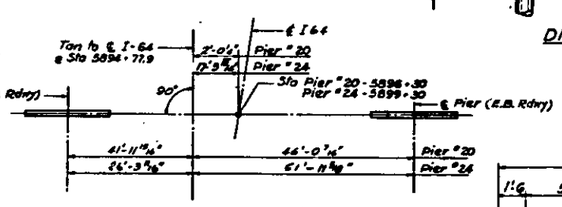

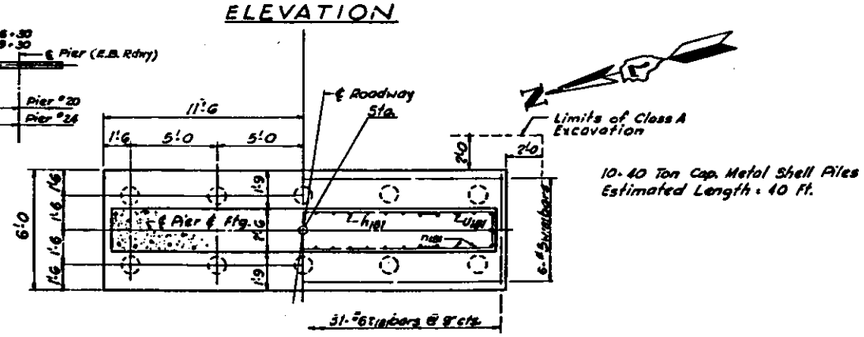

10-40 Ton Cap. Metal Shell Piles
Estimated Length = 40 Ft.

FOOTING PLAN

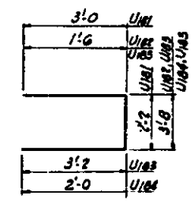

u BARS

n181 BAR

TABLE OF ELEVATIONS AND STATIONS

Pier	Elevations A	B	C	D	E	F	G	Station
20 W.B.	370.07	398.57	398.79	398.93	399.11	399.29	399.41	5896+28.84
20 E.B.	370.06	398.56	398.74	398.97	399.10	399.28	399.46	5896+31.18
24 W.B.	369.18	397.68	397.86	398.06	398.22	398.40	398.58	5899+26.35
24 E.B.	369.16	397.66	397.84	398.02	398.20	398.38	398.56	5899+33.51

BILL OF MATERIAL

Bar	No.	Size	Length	Shape
h181	22	5	18'-0	—
h182	22	5	13'-9	—
h183	4	5	29'-0	—
h184	4	5	35'-9	—
n181	48	5	5'-0	L
P181	8	6	11'-6	—
P182	8	10	14'-0	—
P183	4	10	35'-9	—
P184	4	5	17'-9	—
t181	31	6	5'-6	—
U181	42	5	8'-2	⊔
U182	6	6	6'-8	⊔
U183	50	5	10'-0	⊔
U184	20	5	7'-8	⊔
U185	18	4	6'-8	⊔
V181	30	5	23'-0	—
V182	10	6	22'-6	—
V183	8	5	12'-0	—
W181	6	5	22'-6	—
Reinforcement Bars			Lbs.	5230
Class X Concrete			Cu. Yds.	737
Class A Excavation			Cu. Yds.	59
14" ø Metal Shell Piles			Lin. Ft.	400

Quantities shown are for one (1) Pier 20
Quantities for one (1) Pier 24 are same, except:

Class A Excavation	Cu. Yds.	78

Use for W.B. & E.B. Structures

F.A.I. RTE. NO.	SECTION	COUNTY	TOTAL SHEETS	SHEET NO.
64	97-3B	White	103	38
PROJECT NO.				

CONSOER, TOWNSEND & ASSOCIATES
CONSULTING ENGINEERS CHICAGO, ILLINOIS

ILLINOIS DIVISION OF HIGHWAYS
FAI ROUTE 64 BRIDGE OVER WABASH RIVER
F.A.I. 64 SECTION 97-3B
WHITE COUNTY, ILLINOIS
POSEY COUNTY, INDIANA

PIERS NO. 20 & 24

DMP | DMP

As Awarded "As Built" 6-7-66 L.W.

FOR INFORMATION ONLY

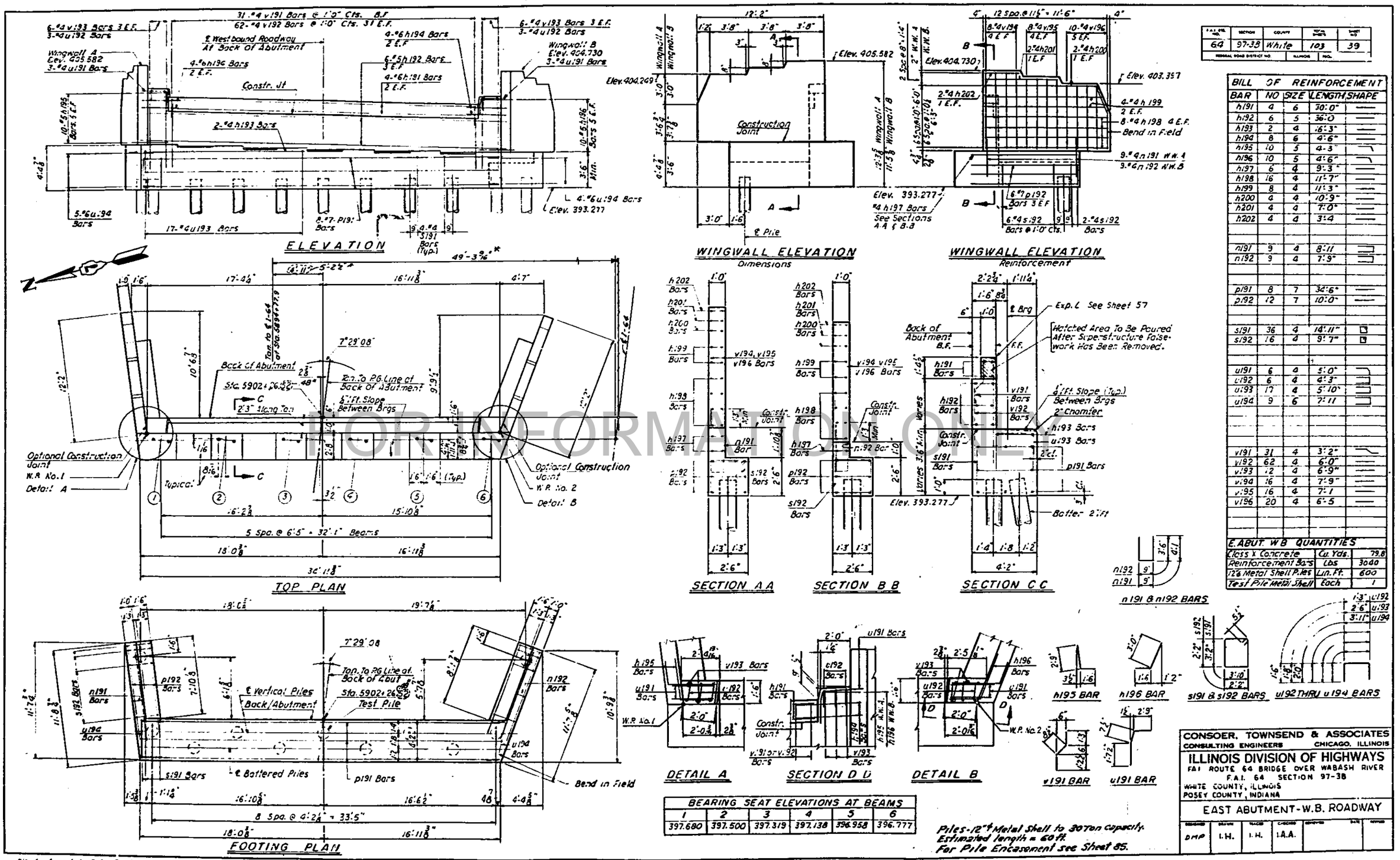

F.A.I. RTE. NO.	SECTION	COUNTY	TOTAL SHEETS	SHEET NO.
64	97-3B	White	103	39
FEDERAL ROAD DISTRICT NO.		ILLINOIS	NO.	

BILL OF REINFORCEMENT				
BAR	NO	SIZE	LENGTH	SHAPE
h191	4	6	30'-0"	
h192	6	5	36'-0	
h193	2	4	16'-3"	
h194	8	6	4'-6"	
h195	10	5	4'-3"	
h196	10	5	4'-6"	
h197	6	4	9'-3"	
h198	16	4	11'-7"	
h199	8	4	11'-3"	
h200	4	4	10'-9"	
h201	4	4	7'-0"	
h202	4	4	3'-4	
n191	9	4	8'-11	
n192	9	4	7'-9"	
p191	8	7	32'-6"	
p192	12	7	10'-0"	
s191	36	4	14'-11"	
s192	16	4	9'-7"	
u191	6	4	5'-0"	
u192	6	4	4'-3"	
u193	17	4	5'-10"	
u194	9	6	7'-11	
v191	31	4	3'-2"	
v192	62	4	6'-0"	
v193	12	4	6'-9"	
v194	16	4	7'-9"	
v195	16	4	7'-1	
v196	20	4	6'-5	

E. ABUT. W.B. QUANTITIES		
Class X Concrete	Cu. Yds.	79.8
Reinforcement Bars	Lbs	3040
12" ϕ Metal Shell Piles	Lin. Ft.	600
Test Pile Metal Shell	Each	1

BEARING SEAT ELEVATIONS AT BEAMS					
1	2	3	4	5	6
397.680	397.500	397.319	397.138	396.958	396.777

Piles - 12" ϕ Metal Shell to 30 Ton capacity.
Estimated length = 60 ft.
For Pile Encasement see Sheet 85.

CONSOER, TOWNSEND & ASSOCIATES
CONSULTING ENGINEERS CHICAGO, ILLINOIS

ILLINOIS DIVISION OF HIGHWAYS
FAI ROUTE 64 BRIDGE OVER WABASH RIVER
F.A.I. 64 SECTION 97-3B
WHITE COUNTY, ILLINOIS
POSEY COUNTY, INDIANA

EAST ABUTMENT - W.B. ROADWAY

DESIGNED	DRAWN	TRACED	CHECKED	REVIEWED	DATE	REVISED
DMP	I.H.	I.H.	I.A.A.			

FOR INFORMATION ONLY

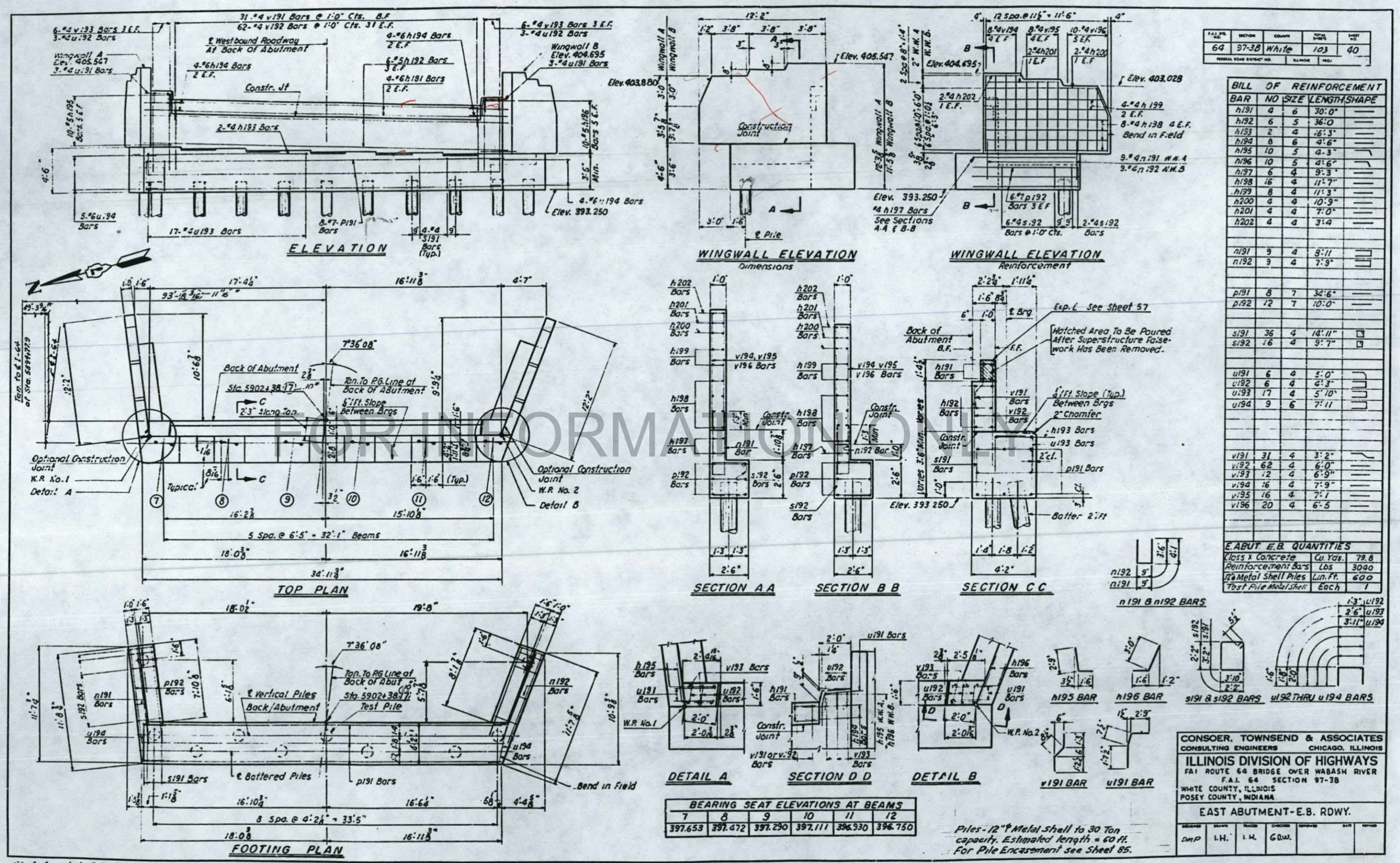

F.A.I. RTE. NO.	SECTION	COUNTY	TOTAL SHEETS	SHEET NO.
64	97-3B	White	103	40
FEDERAL ROAD DISTRICT NO.		ILLINOIS	PROJ.	

BILL OF REINFORCEMENT				
BAR	NO	SIZE	LENGTH	SHAPE
h191	4	6	30'-0"	
h192	6	5	36'-0	
h193	2	4	16'-3"	
h194	8	6	4'-6"	
h195	10	5	4'-3"	
h196	10	5	4'-6"	
h197	6	4	9'-3"	
h198	16	4	11'-7"	
h199	8	4	11'-3"	
h200	4	4	10'-9"	
h201	4	4	7'-0"	
h202	4	4	3'-4	
n191	9	4	8'-11	
n192	9	4	7'-9"	
p191	8	7	34'-6"	
p192	12	7	10'-0"	
s191	36	4	14'-11"	
s192	16	4	9'-7"	
u191	6	4	5'-0"	
u192	6	4	4'-3"	
u193	17	4	5'-10"	
u194	9	6	7'-11	
v191	31	4	3'-2"	
v192	62	4	6'-0"	
v193	12	4	6'-9"	
v194	16	4	7'-9"	
v195	16	4	7'-1	
v196	20	4	6'-5	

E. ABUT. E.B. QUANTITIES		
Class X Concrete	Cu. Yds.	79.8
Reinforcement Bars	Lbs	3040
12" ϕ Metal Shell Piles	Lin. Ft.	600
Test Pile Metal Shell	Each	1

BEARING SEAT ELEVATIONS AT BEAMS					
7	8	9	10	11	12
397.653	397.472	397.290	397.111	396.930	396.750

Piles - 12" ϕ Metal Shell to 30 Ton capacity. Estimated length = 60 ft. For Pile Encasement see Sheet 85.

CONSOER, TOWNSEND & ASSOCIATES
CONSULTING ENGINEERS CHICAGO, ILLINOIS

ILLINOIS DIVISION OF HIGHWAYS
FAI ROUTE 64 BRIDGE OVER WABASH RIVER
F.A.I. 64 SECTION 97-3B
WHITE COUNTY, ILLINOIS
POSEY COUNTY, INDIANA

EAST ABUTMENT - E.B. RDWY.

DESIGNED	DRAWN	TRACED	CHECKED	REVIEWED	DATE	REVISED
DMP	I.H.	I.W.	G.D.W.			

FOR INFORMATION ONLY

(-) As Awarded * As Built 6-7-66 L.W.

F.A.I. RTE. NO.	SECTION	COUNTY	TOTAL SHEETS	SHEET NO.
64	97-3B	WHITE	103	41
FEDERAL ROAD DISTRICT NO.		ILLINOIS	PROJ.	

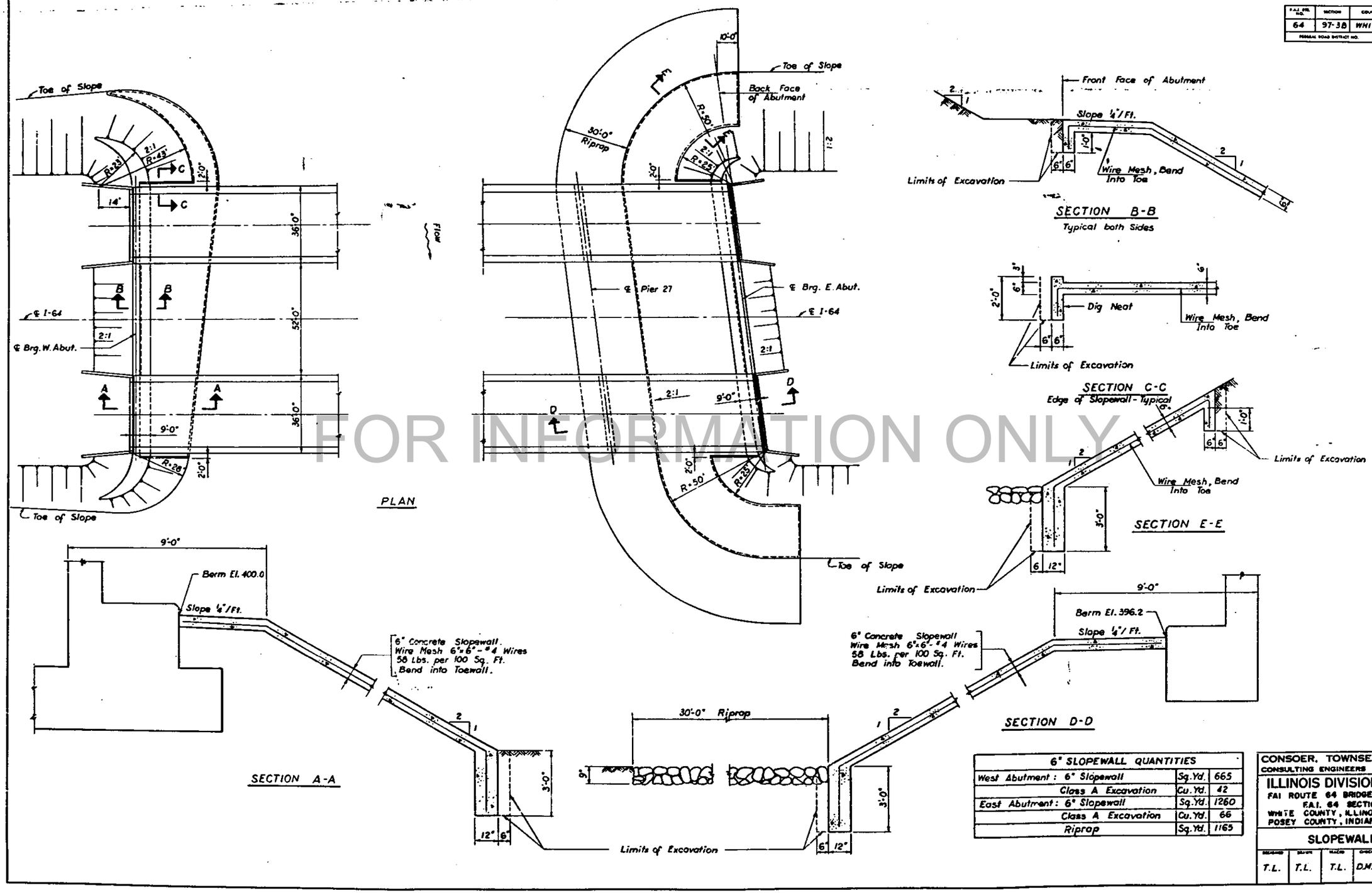

FOR INFORMATION ONLY

6" SLOPEWALL QUANTITIES		
West Abutment : 6" Slopewall	Sq.Yd.	665
Class A Excavation	Cu.Yd.	42
East Abutment : 6" Slopewall	Sq.Yd.	1260
Class A Excavation	Cu.Yd.	66
Riprap	Sq.Yd.	1165

CONSOER, TOWNSEND & ASSOCIATES
CONSULTING ENGINEERS CHICAGO, ILLINOIS

ILLINOIS DIVISION OF HIGHWAYS
FAI ROUTE 64 BRIDGE OVER WABASH RIVER
F.A.I. 64 SECTION 97-3 B
WHITE COUNTY, ILLINOIS
POSEY COUNTY, INDIANA

SLOPEWALL DETAILS

DESIGNED	DRAWN	TRACED	CHECKED	REVIEWED	DATE	REVISED
T.L.	T.L.	T.L.	D.M.P.			

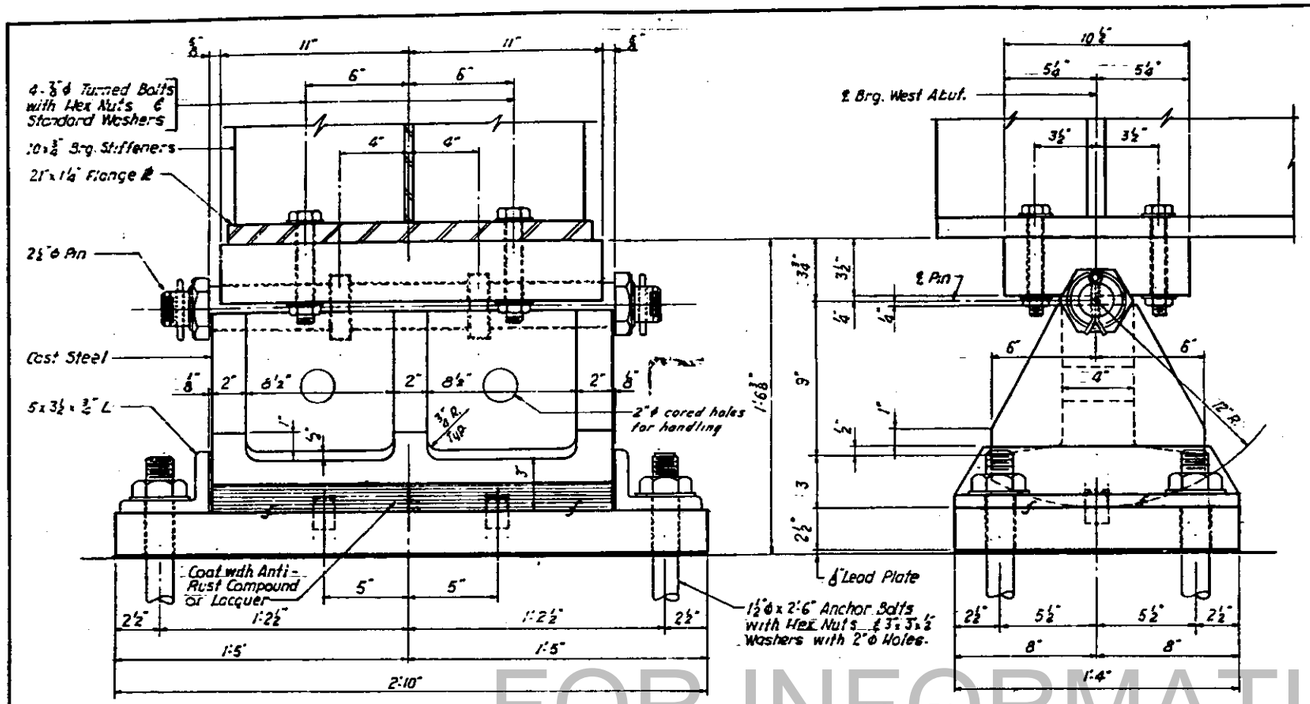

EXPANSION BEARING E1

8 Required

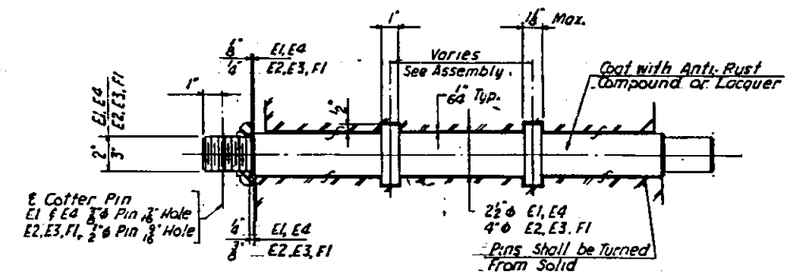

PIN DETAILS

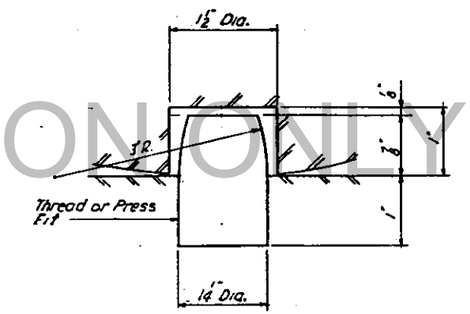

PINTLE DETAIL

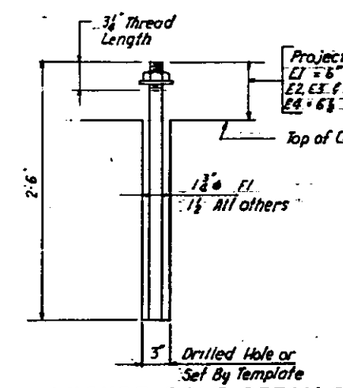

ANCHOR BOLT DETAILS

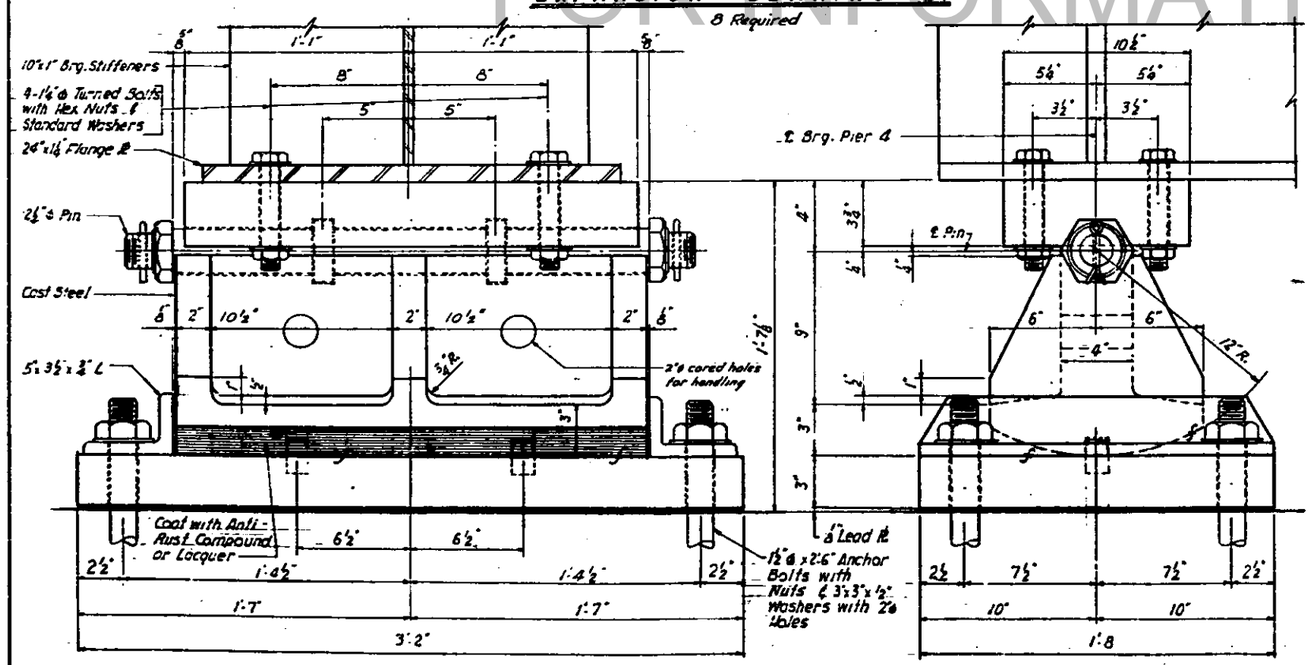

EXPANSION BEARING E4

8 Required

Note:
Weights of anchor bolts, nuts, washers, cotter pins, turned bolts & lead plates are in included in total weights of bearings.

NOTES

All Castings shall be A.S.T.M. A27 Grade 65-35, Fully Annealed. All pins shall be A.S.T.M. A235, Class F.

Weight Of Bearing Devices This Sheet:
Structural Steel 26,440 lbs.

FAI RTE. NO.	SECTION	COUNTY	TOTAL SHEETS	SHEET NO.
64	97-3B	White	103	121
FEDERAL ROAD DISTRICT NO.		STATE		

CONSOER, TOWNSEND & ASSOCIATES
CONSULTING ENGINEERS CHICAGO, ILLINOIS

ILLINOIS DIVISION OF HIGHWAYS
FAI ROUTE 64 BRIDGE OVER WABASH RIVER
F.A.I. 64 SECTION 97-3B
WHITE COUNTY, ILLINOIS
POSEY COUNTY, INDIANA

BEARING DETAILS

FOR INFORMATION ONLY

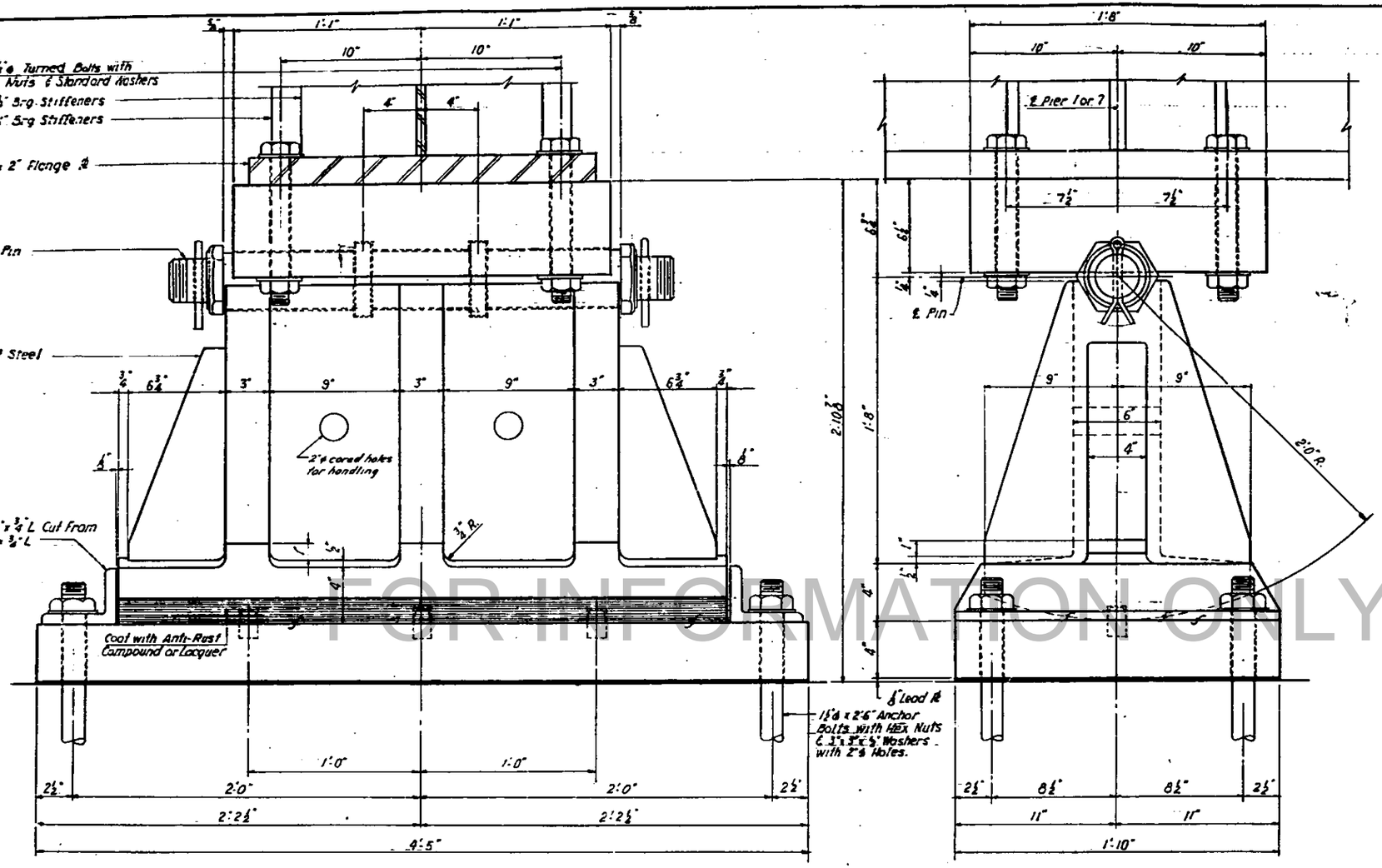

FOR INFORMATION ONLY

EXPANSION BEARING E2

8 Required

For Notes & Details not shown, See Sheet 42

Weight of Bearing Detailed this Sheet
Structural Steel 40,260 Lbs.

CONSOER, TOWNSEND & ASSOCIATES
CONSULTING ENGINEERS CHICAGO, ILLINOIS

ILLINOIS DIVISION OF HIGHWAYS
FAI ROUTE 64 BRIDGE OVER WABASH RIVER
F.A.I. '64 SECTION 97-3B
WHITE COUNTY, ILLINOIS
POSEY COUNTY, INDIANA

BEARING DETAILS

CHKD.	I.H.				

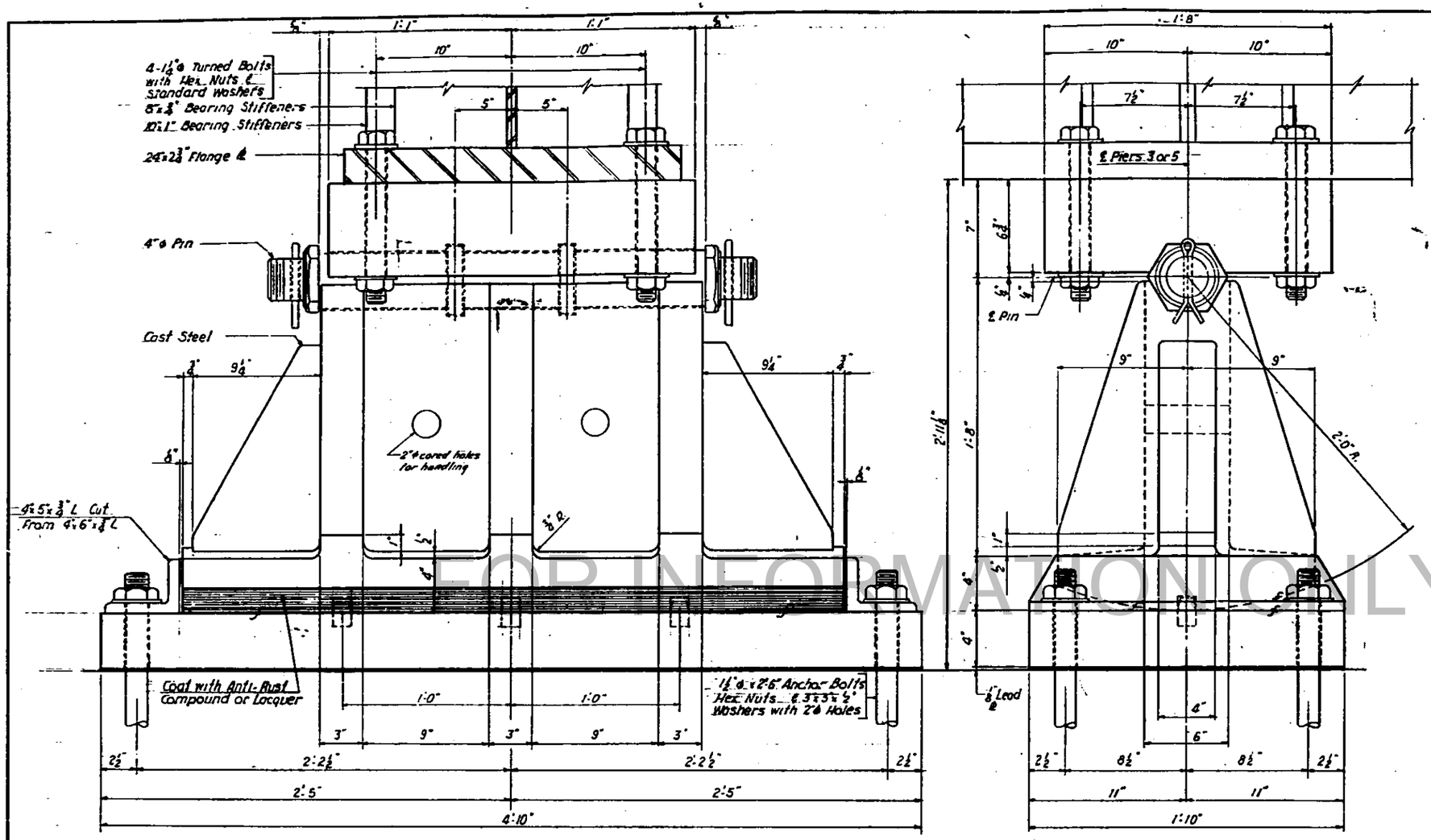

EXPANSION BEARING E3

5 Required

For Notes & Details not shown, see Sheet 42

Weight of Bearing Devices: See Sheet
Structural Steel: [illegible]

CONSOER, TOWNSEND & ASSOCIATES
CONSULTING ENGINEERS
ILLINOIS DIVISION
FAI ROUTE 64
DUBOIS EAST [illegible]
WHITE COUNTY
POSEY COUNTY
[illegible]

FAI ROUTE NO.	SECTION	COUNTY	TOTAL SHEETS	SHEET NO.
64	87-3B	White	103	64
PROJECT NO.				

FOR INFORMATION ONLY

F.A.I. RTE. NO.	SECTION	COUNTY	TOTAL SHEETS	SHEET NO.
64	97-3B	White	103	45
FEDERAL ROAD DISTRICT NO.		STATE		

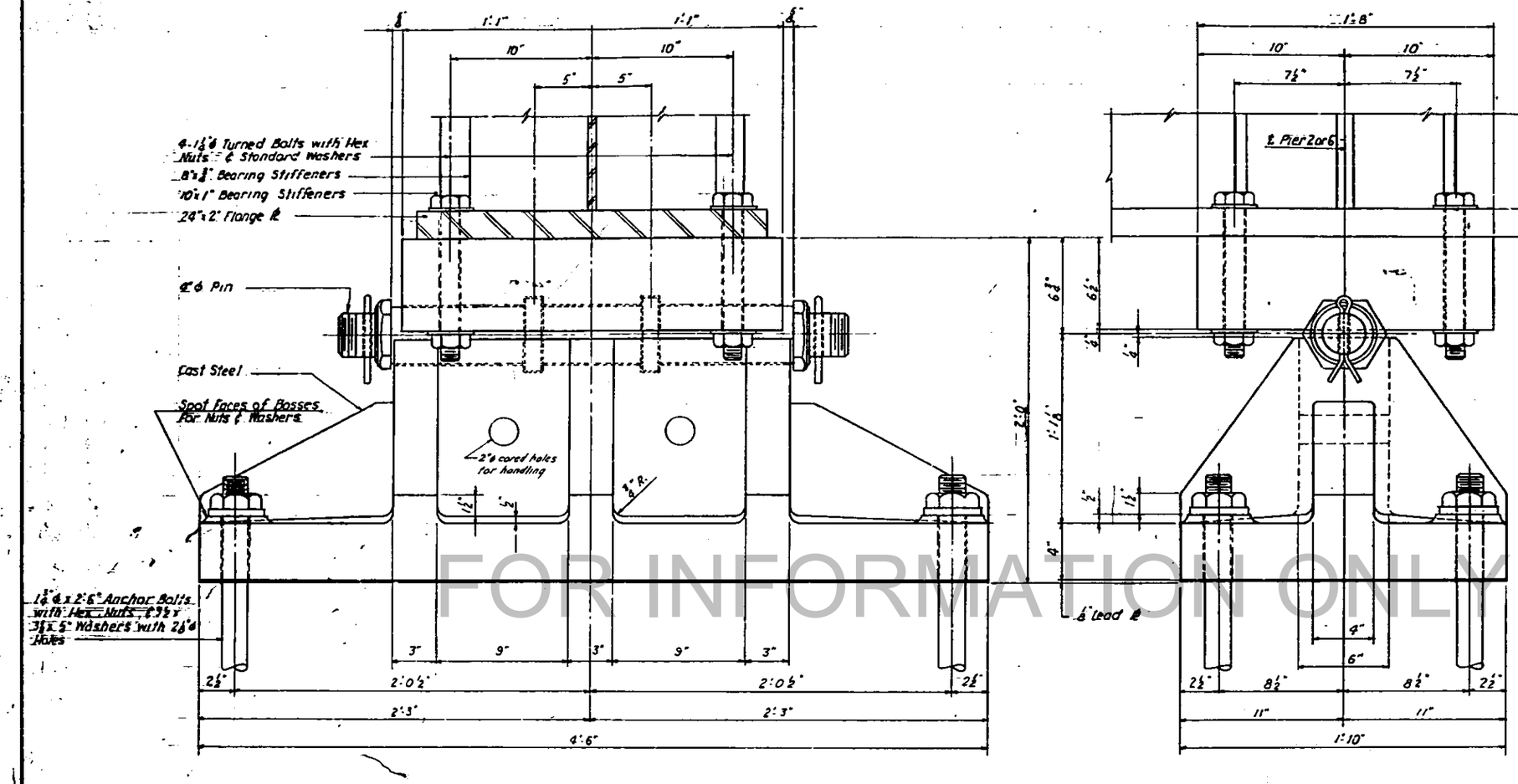

FOR INFORMATION ONLY

FIXED BEARING F1

8 Required

For Notes & Details not shown, See Sheet 42

Weight of Bearing Devices this Sheet
Structural Steel 34,750 Lbs.

CONSOER, TOWNSEND & ASSOCIATES
CONSULTING ENGINEERS CHICAGO, ILLINOIS

ILLINOIS DIVISION OF HIGHWAYS
FAI ROUTE 64 BRIDGE OVER WABASH RIVER
F.A.I. 64 SECTION 97-3B
WHITE COUNTY, ILLINOIS
POSEY COUNTY, INDIANA

BEARING DETAILS

DESIGNED	DRAWN	TRACED	CHECKED	SUBMITTED	DATE	REVISED
CWW	I.H.	I.H.	F.A.A.			

F.A.I. RTE. NO.	SECTION	COUNTY	TOTAL SHEETS	SHEET NO.
64	97-38	White	103	46
FEDERAL ROAD DISTRICT NO.		ILLINOIS	FED. AID PROJ.	

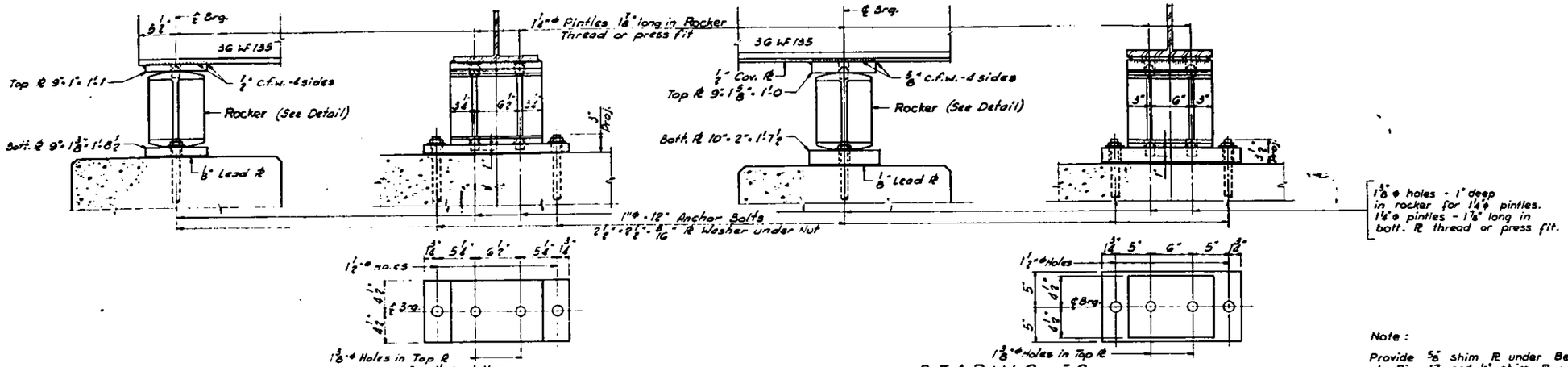

BEARING E5
120 Req'd.

BEARING E6
120 Req'd.

Note :

Provide 5/8" shim ℞ under Beams 2,3,8 & 9 at Pier 17 and ⅛" shim ℞ under Beams 4 & 10 at Pier 17. Make shim ℞'s same length, width and hole location as Bott. ℞ for bearing E6.

FOR INFORMATION ONLY

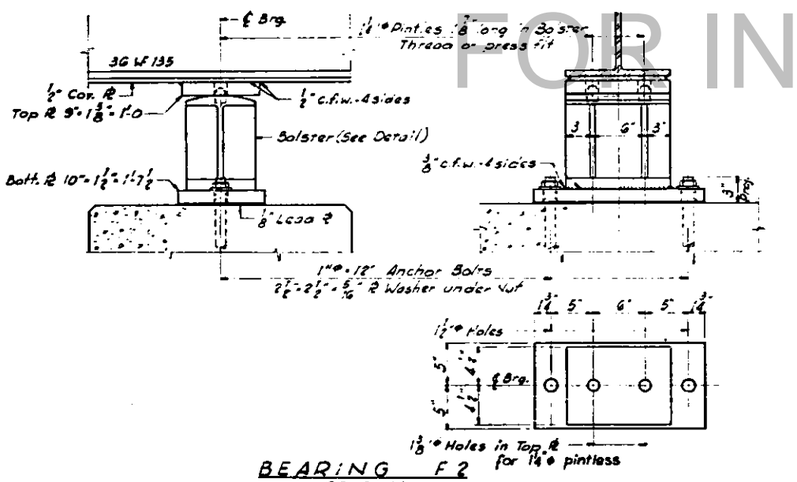

BEARING F2
60 Req'd.

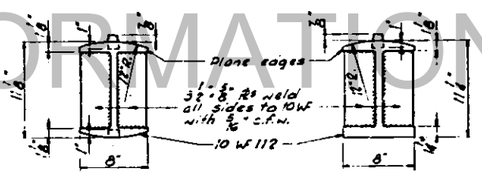

BEARINGS E5 & E6 BEARING F2

BOLSTER AND ROCKER DETAILS

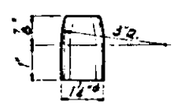

PINTLE DETAIL

Note :

For anchor bolt location at Piers 17 thru 21 see Pier drawings.

CONSOER, TOWNSEND & ASSOCIATES
CONSULTING ENGINEERS CHICAGO, ILLINOIS

ILLINOIS DIVISION OF HIGHWAYS
FAI ROUTE 64 BRIDGE OVER WABASH RIVER
F.A.I. 64 SECTION 97-38
WHITE COUNTY, ILLINOIS
POSEY COUNTY, INDIANA

BEARING DETAILS

DESIGNED	DRAWN	TRACED	CHECKED	SUPERVISED	DATE	REVISED
D.M.P.	[illegible]	[illegible]	D.M.P.			

F.A.I. RTE. NO.	SECTION	COUNTY	TOTAL SHEETS	SHEET NO.
64	97-3B	White	103	47
FEDERAL ROAD DISTRICT NO.		ILLINOIS	FED.	

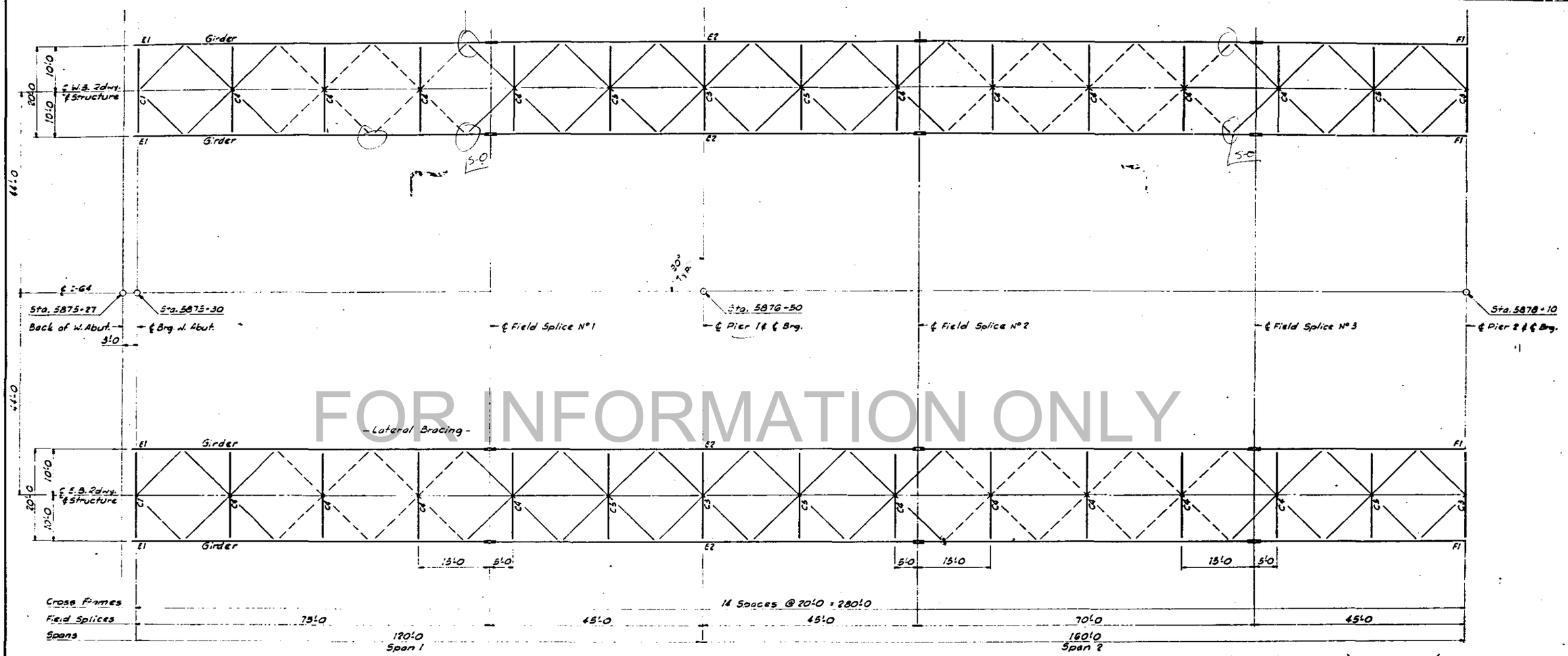

FOR INFORMATION ONLY

Note:
For Girders see Sht. 57
For Cross Frames see Shts. 58 & 59
For Lateral Bracing see Sht. 59
For Field Splices see Sht. 60
For Bearings see Shts. 42, 43 & 45

Indicates Lateral Bracing at bottom flange of Girder only.

A-441 Steel: Girders ..... 1,433,436 Lbs.
A-36 Steel: Girds., Cross Frames, Lat. Bracing, Etc. 1,329,444
Bearings 145,080
Expansion Devices 66,040
Total Structural Steel 3,174,000 Lbs.
(W.B. & E.B. Structures W. Abut. to Pier 8)

36 Bt. Pl.
44 Top Pl.

CONSOER, TOWNSEND & ASSOCIATES
CONSULTING ENGINEERS CHICAGO, ILLINOIS

ILLINOIS DIVISION OF HIGHWAYS
FAI. ROUTE 64 BRIDGE OVER WABASH RIVER
F.A.I. 64 SECTION 97-3B
WHITE COUNTY, ILLINOIS
POSEY COUNTY, INDIANA

STEEL FRAMING PLAN

DESIGNED	DRAWN	TRACED	CHECKED	REVIEWED	DATE	APPROVED
IAA			GDW			

F.A.I. RTE. NO.	SECTION	COUNTY	TOTAL SHEETS	SHEET NO.
64	97-3B	White	103	48
PROJECT NO.				

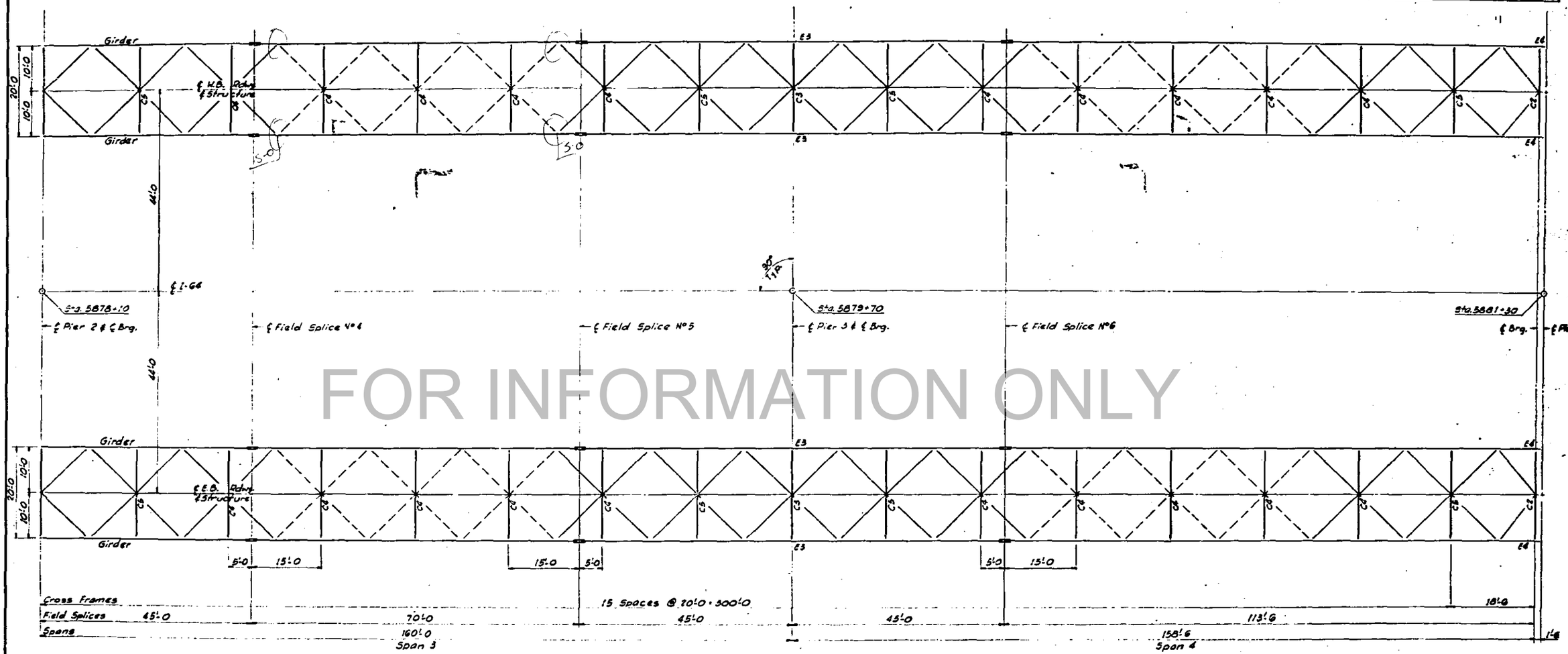

Note:
For Girders see Sht. 57
For Cross Frames see Shts. 58 & 59
For Lateral Bracing see Sht. 59
For Field Splices see Sht. 60
For Bearings see Shts. 42 & 44

64 Bt. Pl.
48 Tip Pl.

CONSOER, TOWNSEND & ASSOCIATES
CONSULTING ENGINEERS CHICAGO, ILLINOIS

ILLINOIS DIVISION OF HIGHWAYS
FAI ROUTE 64 BRIDGE OVER WABASH RIVER
F.A.I. 64 SECTION 97-3B
WHITE COUNTY, ILLINOIS
POSEY COUNTY, INDIANA

STEEL FRAMING PLAN

IAA GDW

FOR INFORMATION ONLY

F.A.I. RTE. NO.	SECTION	COUNTY	TOTAL SHEETS	SHEET NO.
64	97-38	White	103	49
FEDERAL AID DISTRICT NO.		ILLINOIS	FED. AID. PROJ.	

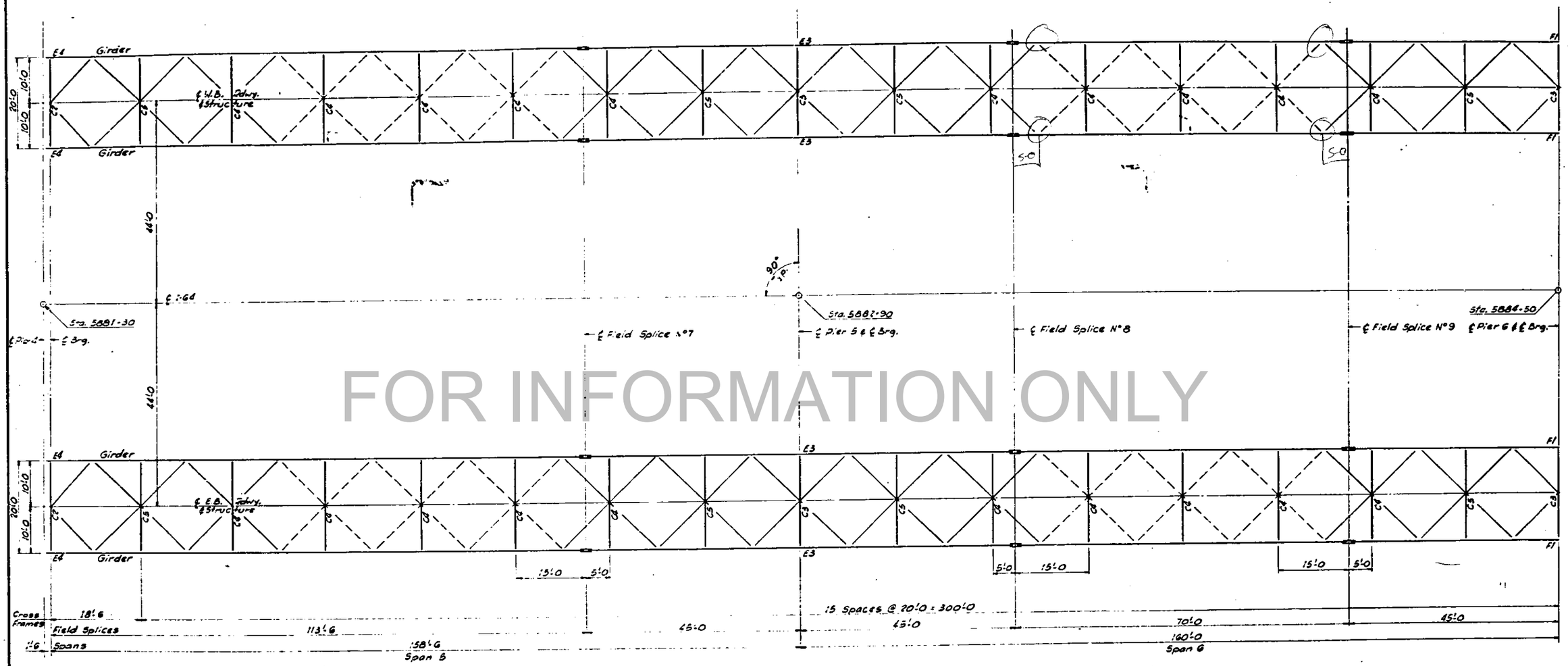

FOR INFORMATION ONLY

Note:
For Girders see Sht. 57
For Cross Frames see Shts. 58 & 59
For Lateral Bracing see Sht. 59
For Field Splices see Sht. 60
For Bearings see Shts. 42, 44 & 45

CONSOER, TOWNSEND & ASSOCIATES
CONSULTING ENGINEERS — CHICAGO, ILLINOIS

ILLINOIS DIVISION OF HIGHWAYS
FAI ROUTE 64 BRIDGE OVER WABASH RIVER
F.A.I. 64 SECTION 97-38
WHITE COUNTY, ILLINOIS
POSEY COUNTY, INDIANA

STEEL FRAMING PLAN

DESIGNED	DRAWN	TRACED	CHECKED	CHECKED	DATE	REVISED
IAA	[illegible]	[illegible]	GDW			

F.A.I. RTE. NO.	SECTION	COUNTY	TOTAL SHEETS	SHEET NO.
64	97-3B	White	103	50
FEDERAL ROAD DISTRICT NO.		ILLINOIS	FINAL	

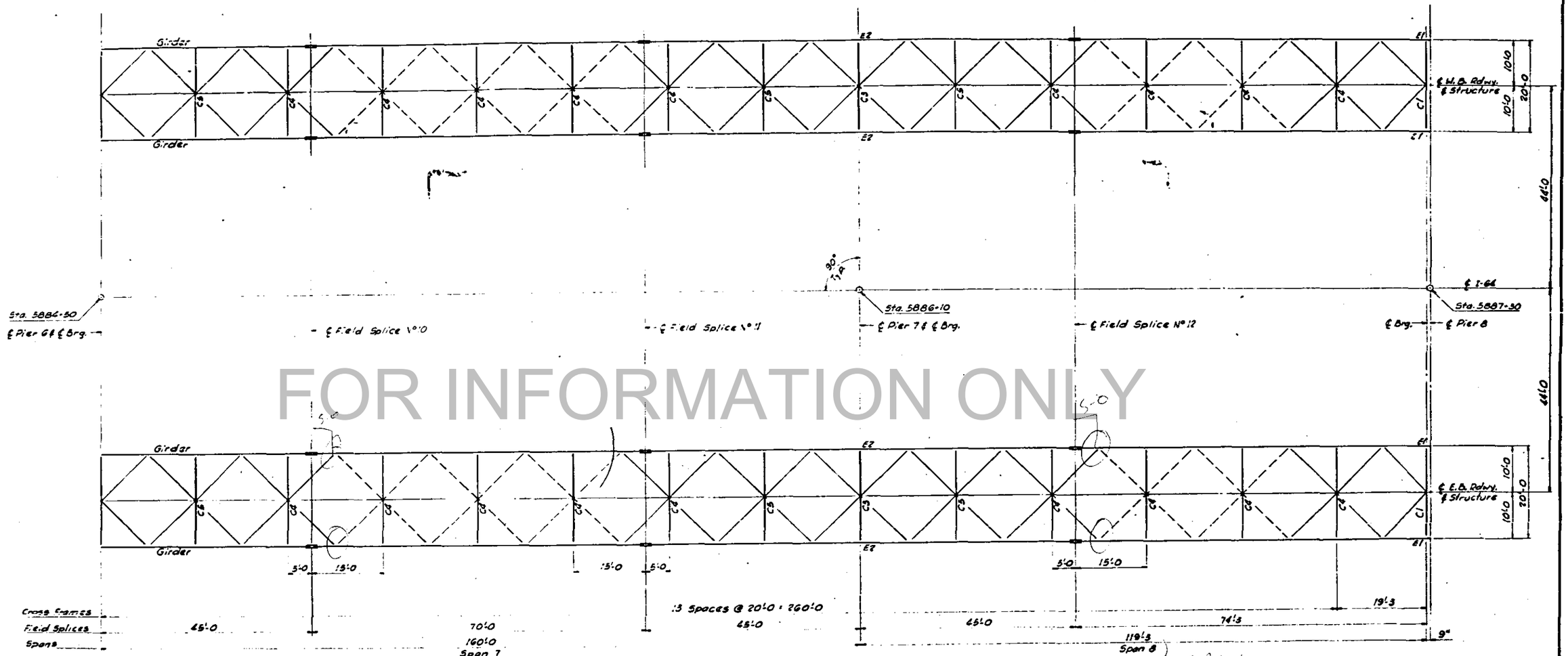

FOR INFORMATION ONLY

Note:
For Girders see Sht. 57
For Cross Frames see Shts. 58 & 59
For Lateral Bracing see Sht. 59
For Field Splices see Sht. 60
For Bearings see Shts. 42 & 43

56 Btm. flg.
14 Top flg.

CONSOER, TOWNSEND & ASSOCIATES
CONSULTING ENGINEERS CHICAGO, ILLINOIS

ILLINOIS DIVISION OF HIGHWAYS
FAI ROUTE 64 BRIDGE OVER WABASH RIVER
F.A.I. 64 SECTION 97-3B
WHITE COUNTY, ILLINOIS
POSEY COUNTY, INDIANA

STEEL FRAMING PLAN

IAA			GDW		

F.A.I. RTE. NO.	SECTION	COUNTY	TOTAL SHEETS	SHEET NO.
64	97-38	White	103	51
FEDERAL ROAD DISTRICT NO.		ILLINOIS	FINAL	

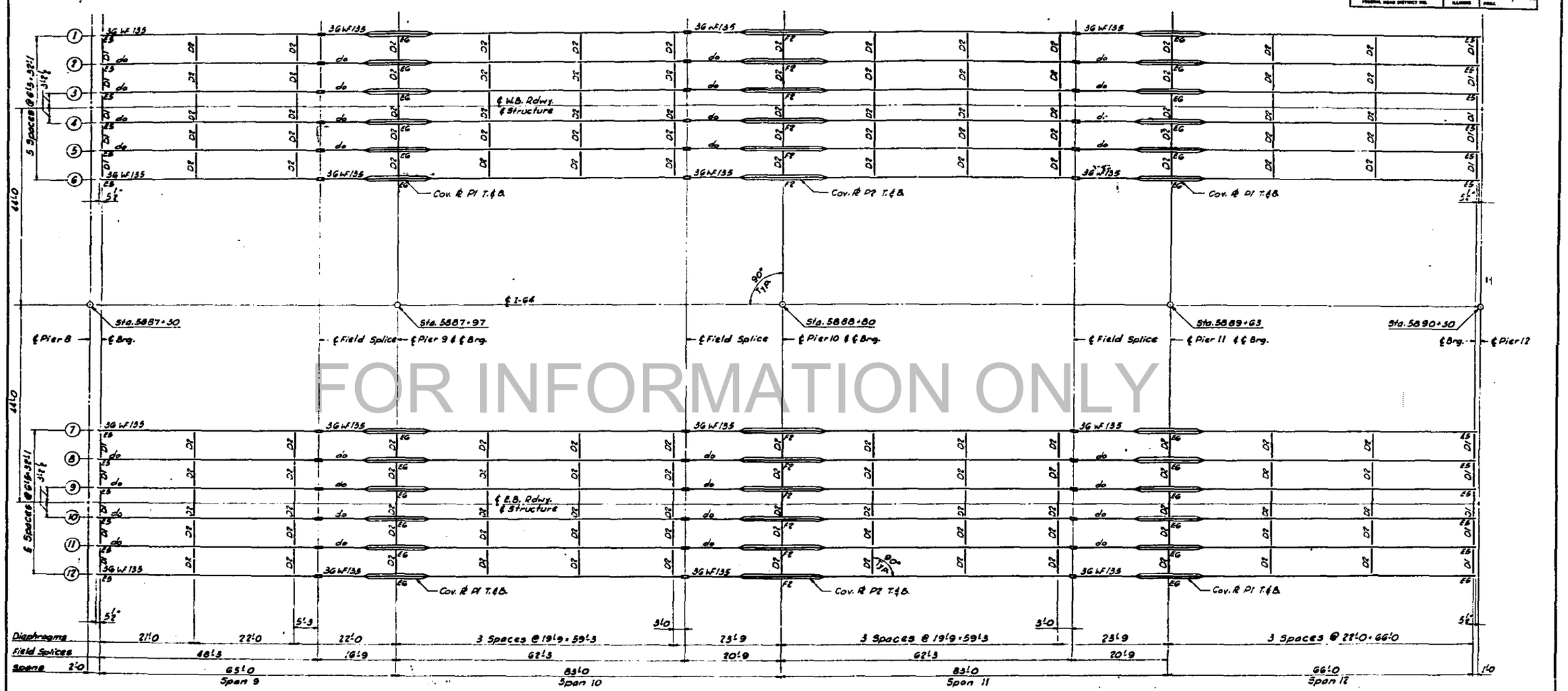

FOR INFORMATION ONLY

Notes:
For Cover Plates see Sht. 60
For Diaphragms see Sht. 60
For Field Splices see Sht. 60
For Bearings see Sht. 46

A-36 Steel: Girds., Diaph., Etc.	2,853,980 Lbs.
Stud Shear Conns.	32,150
Bearings	89,220
Expansion Devices	60,860
Total Structural Steel (W.B. & E.B. Structures Pier 8 to E. Abut.)	3,036,190 Lbs.

CONSOER, TOWNSEND & ASSOCIATES
CONSULTING ENGINEERS CHICAGO, ILLINOIS

ILLINOIS DIVISION OF HIGHWAYS
FAI ROUTE 64 BRIDGE OVER WABASH RIVER
FAI 64 SECTION 97-38
WHITE COUNTY, ILLINOIS
POSEY COUNTY, INDIANA

STEEL FRAMING PLAN

DHR | LAA

F.A.I. RTE. NO.	SECTION	COUNTY	TOTAL SHEETS	SHEET NO.
64	97-38	White	103	58
FEDERAL ROAD DISTRICT NO.		STATE	FILE	

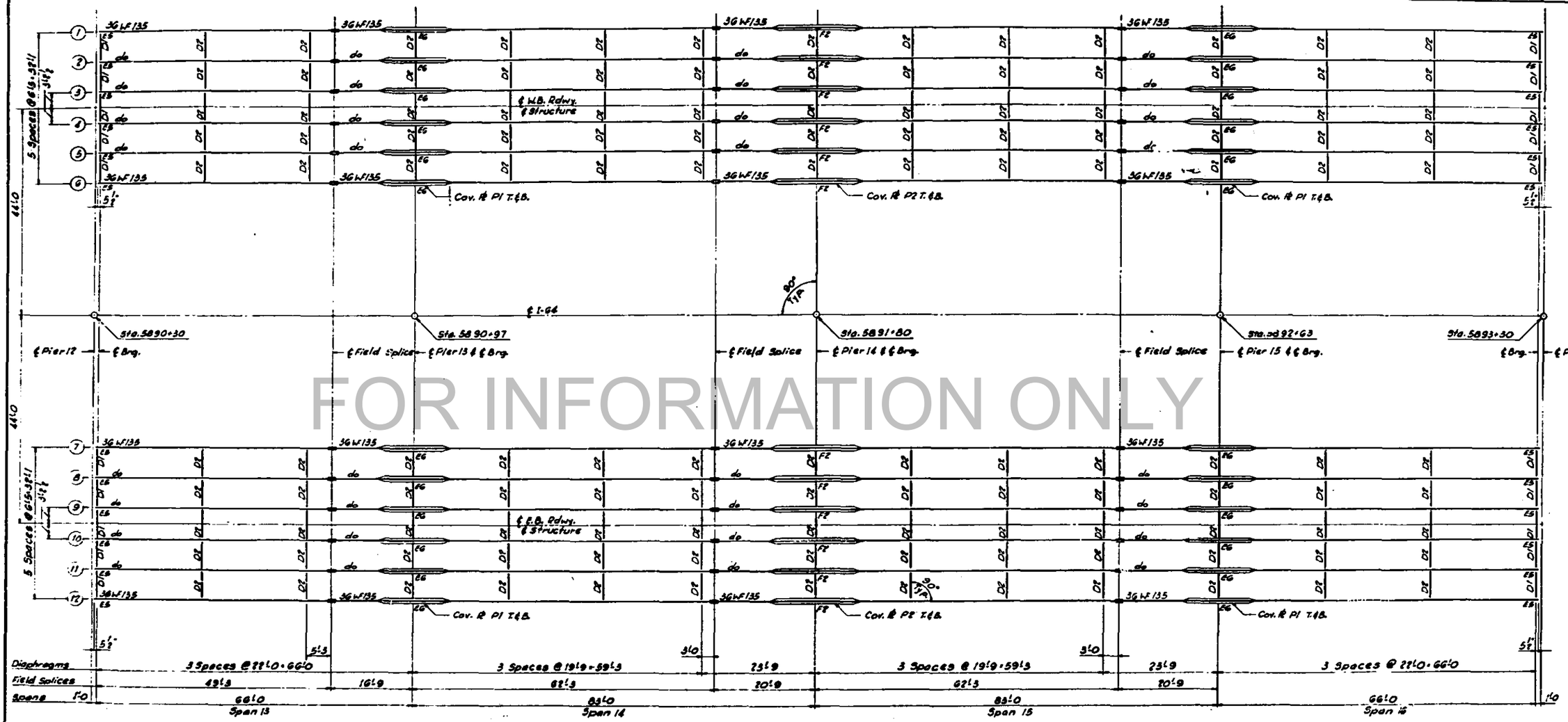

FOR INFORMATION ONLY

Notes:
For Cover Plates see Sht. 60
For Diaphragms see Sht. 60
For Field Splices see Sht. 60
For Bearings see Sht. 46

CONSOER, TOWNSEND & ASSOCIATES
CONSULTING ENGINEERS CHICAGO, ILLINOIS

ILLINOIS DIVISION OF HIGHWAYS
FAI ROUTE 64 BRIDGE OVER WABASH RIVER
F.A.I. 64 SECTION 97-38
WHITE COUNTY, ILLINOIS
POSEY COUNTY, INDIANA

STEEL FRAMING PLAN

DESIGNED	DRAWN	TRACED	CHECKED	REVISED	DATE	REVISED
D.K.R.			IAA			

F.A.I. RTE. NO.	SECTION	COUNTY	TOTAL SHEETS	SHEET NO.
64	97-3B	White	103	53
FEDERAL ROAD DISTRICT NO.		STATE	ILLINOIS	

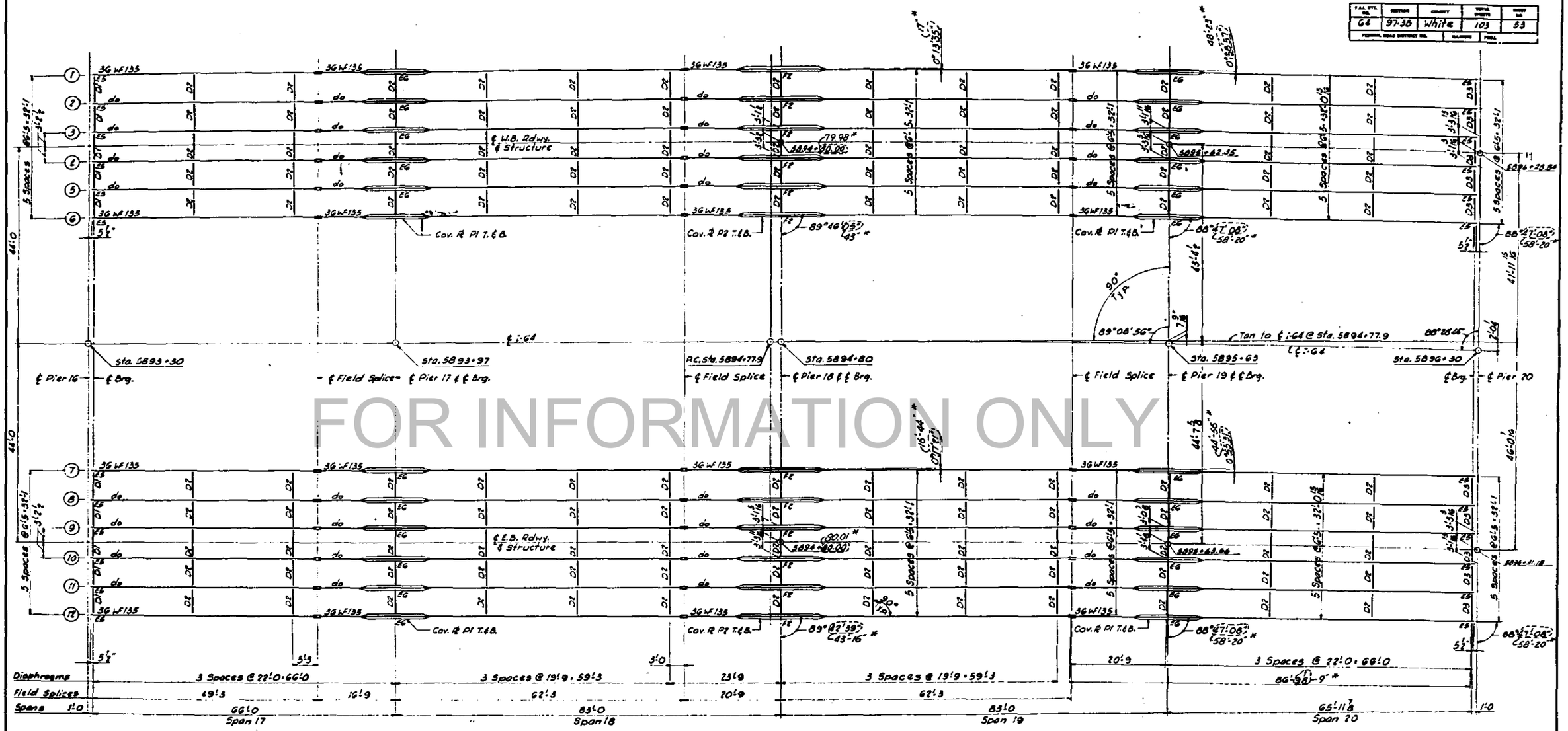

FOR INFORMATION ONLY

Notes:
For Cover Plates see Sht. 60
For Diaphragms see Sht. 60
For Field Splices see Sht. 60
For Bearings see Sht. 46

CONSOER, TOWNSEND & ASSOCIATES
CONSULTING ENGINEERS CHICAGO, ILLINOIS

ILLINOIS DIVISION OF HIGHWAYS
FAI ROUTE 64 BRIDGE OVER WABASH RIVER
F.A.I. 64 SECTION 97-3B
WHITE COUNTY, ILLINOIS
POSEY COUNTY, INDIANA

STEEL FRAMING PLAN

DWN | CKD | CKD | IAA

(As Awarded. * As Built 6-7-66 L.W.

F.A.I. RTE. NO.	SECTION	COUNTY	TOTAL SHEETS	SHEET NO.
64	97-3B	White	103	56
FEDERAL AID DISTRICT NO.		ILLINOIS	FISCAL YEAR	

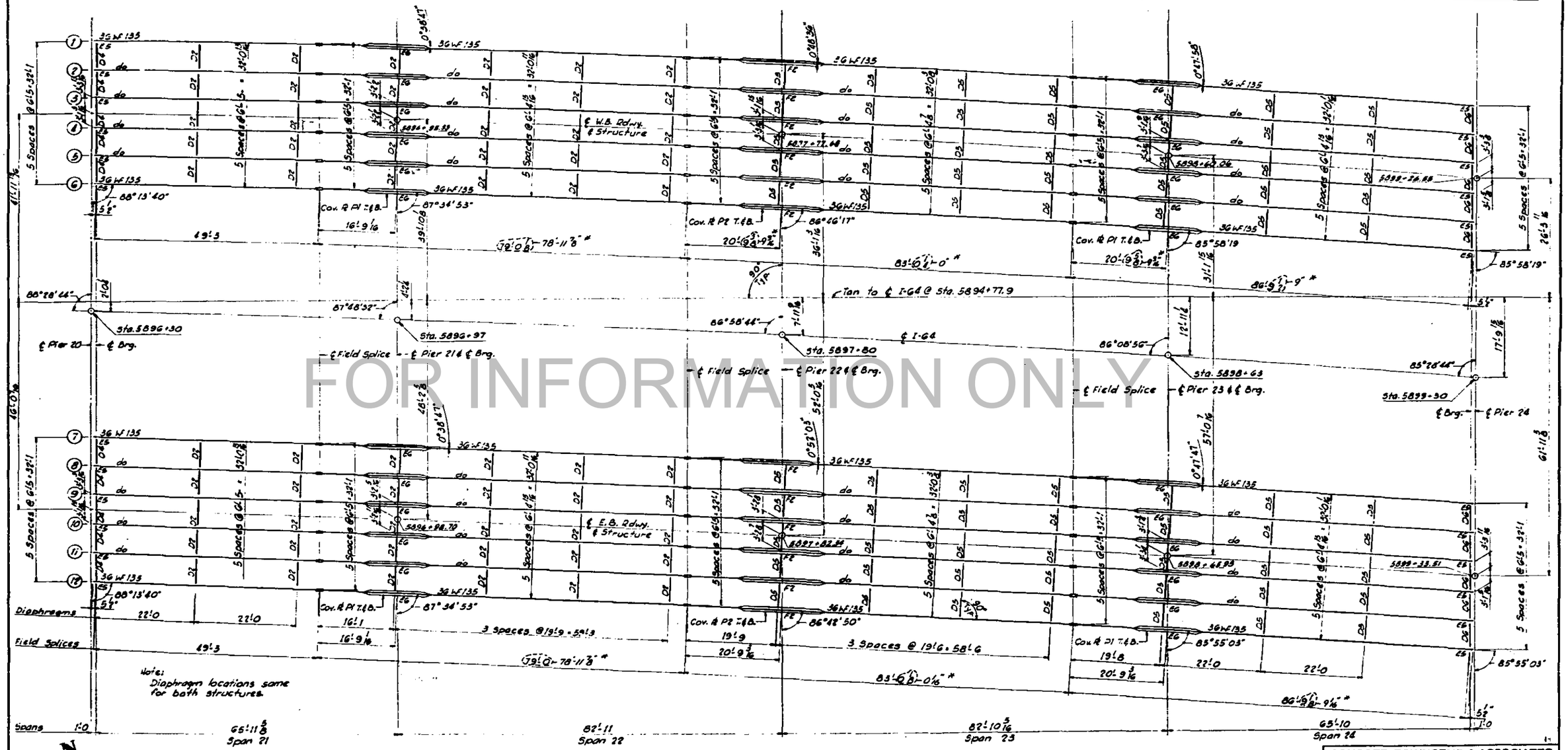

Notes:
For Cover Plates see Sht. 60
For Diaphragms see Sht. 60
For Field Splices see Sht. 60
For Bearings see Sht. 46

CONSOER, TOWNSEND & ASSOCIATES
CONSULTING ENGINEERS — CHICAGO, ILLINOIS

ILLINOIS DIVISION OF HIGHWAYS
FAI ROUTE 64 BRIDGE OVER WABASH RIVER
F.A.I. 64 SECTION 97-3B
WHITE COUNTY, ILLINOIS
POSEY COUNTY, INDIANA

STEEL FRAMING PLAN

D.H.P. — IAA

As Awarded. * As Built 6-7-66 L.W.

FOR INFORMATION ONLY

F.A.I. RTE. NO.	SECTION	COUNTY	TOTAL SHEETS	SHEET NO.
64	97-3B	White	103	33
FEDERAL ROAD DISTRICT NO.		ILLINOIS	FISCAL	

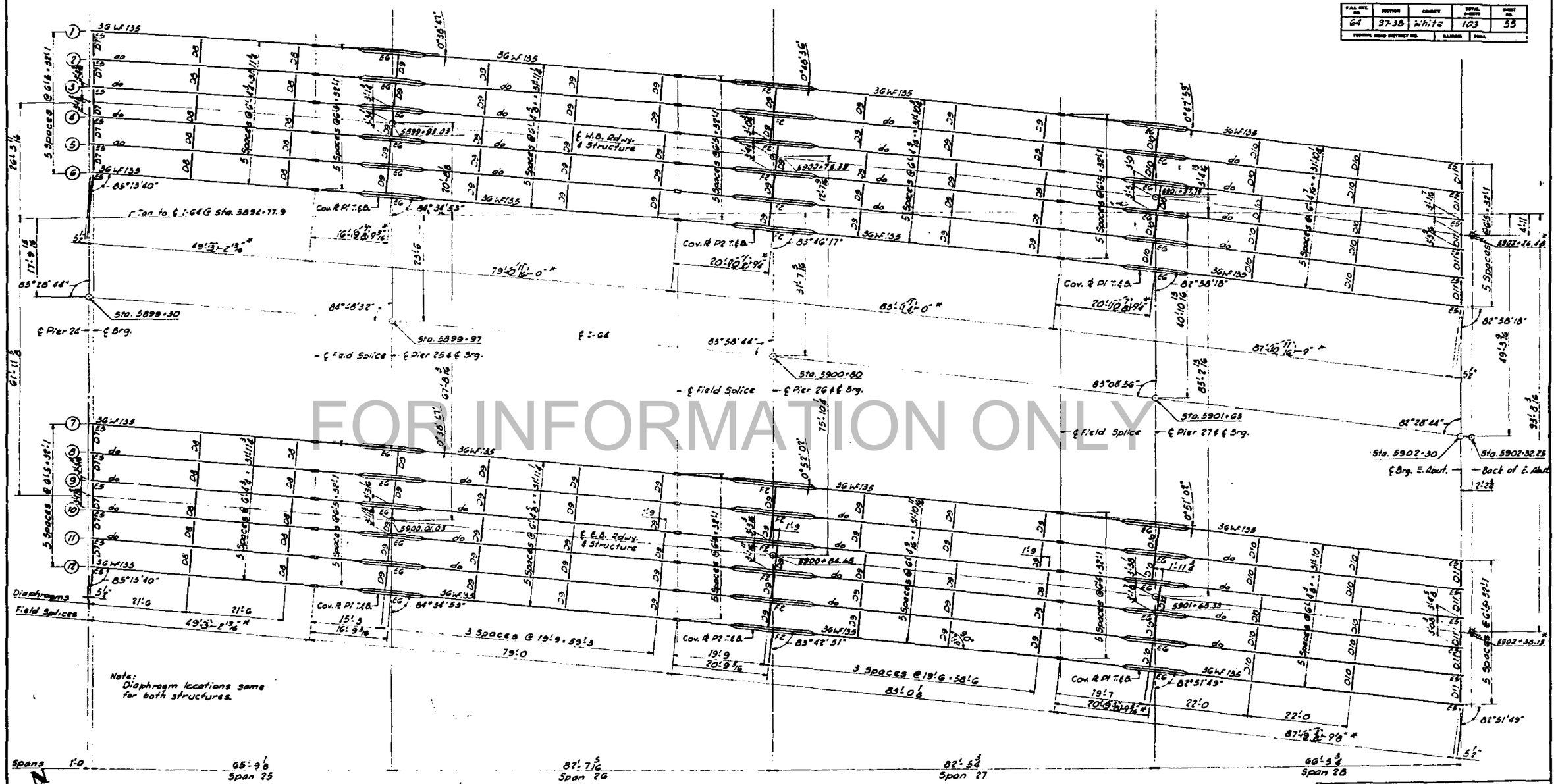

FOR INFORMATION ONLY

F.A.I. RTE. NO.	SECTION	COUNTY	TOTAL SHEETS	SHEET NO.
64	97-38	white	103	56
FEDERAL ROAD DISTRICT NO.		ILLINOIS	PROJ.	

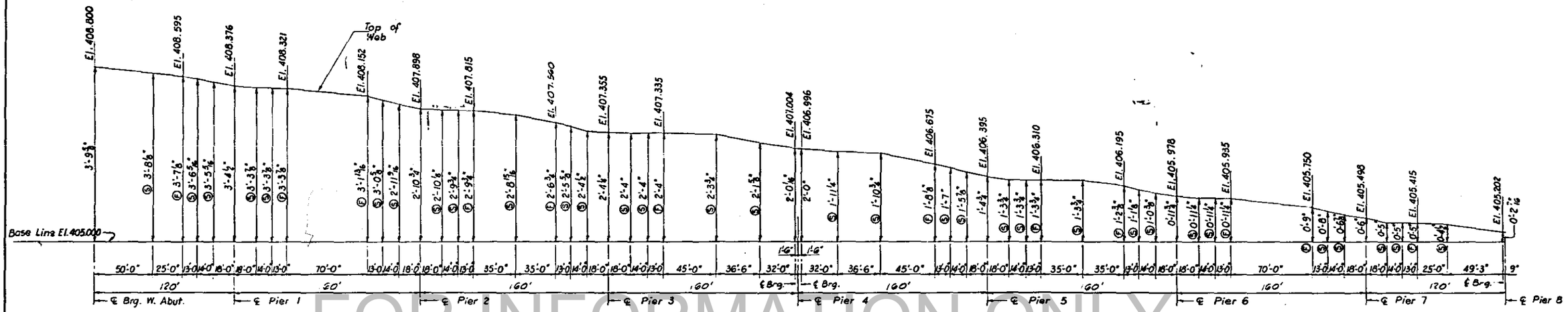

FOR INFORMATION ONLY

BLOCKING DIAGRAM
Span 1 thru Span 8 W.B. & E.B. Roadways

Note:
Ⓢ Denotes Shop Web Splices.
Ⓕ Denotes Field Splices.

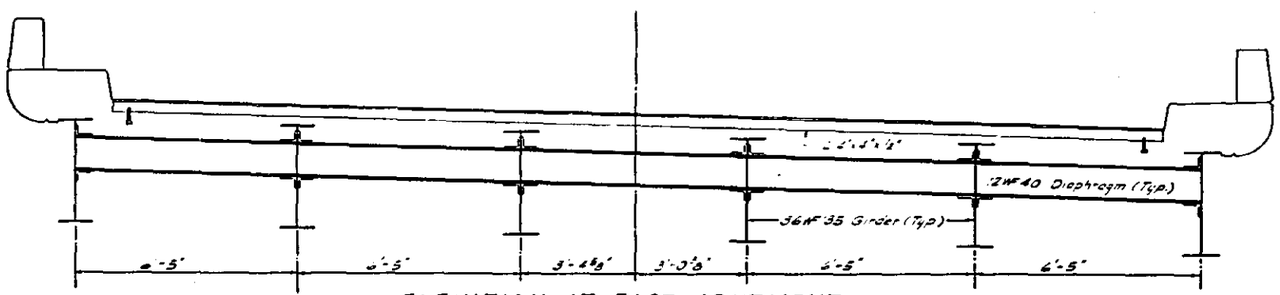

ELEVATION AT EAST ABUTMENT
E.B. Structure shown W.B. Structure similar

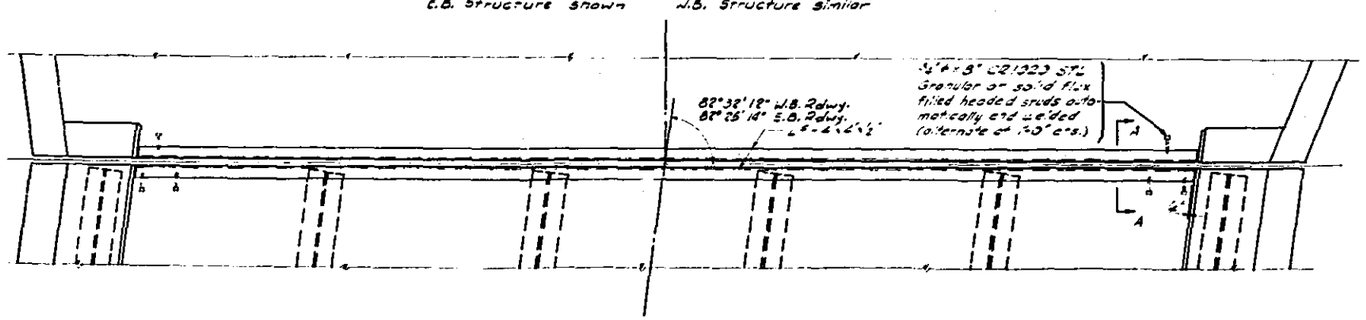

PLAN AT EAST ABUTMENT

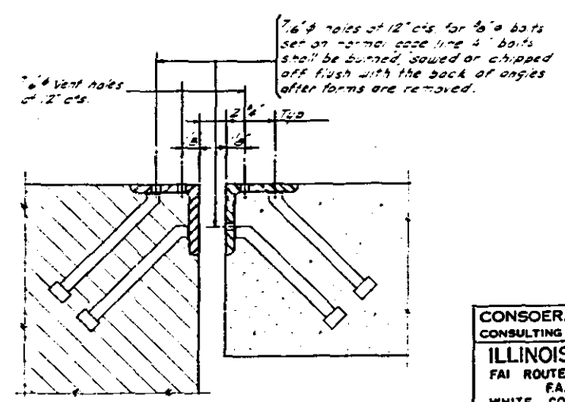

SECTION A-A

CONSOER, TOWNSEND & ASSOCIATES
CONSULTING ENGINEERS CHICAGO, ILLINOIS

ILLINOIS DIVISION OF HIGHWAYS
FAI ROUTE 64 BRIDGE OVER WABASH RIVER
F.A.I. 64 SECTION 97-38
WHITE COUNTY, ILLINOIS
POSEY COUNTY, INDIANA

BLOCKING DIAGRAM & ELEV'S

DESIGNED	DRAWN	TRACED	CHECKED	REVIEWED	DATE	REVISED
DMP	TL DEM	TL DEM				

F.A.I. RTE. NO.	SECTION	COUNTY	TOTAL SHEETS	SHEET NO.
64	97-3B	White	103	57
FEDERAL ROAD DISTRICT NO.		ILLINOIS	PROJ.	

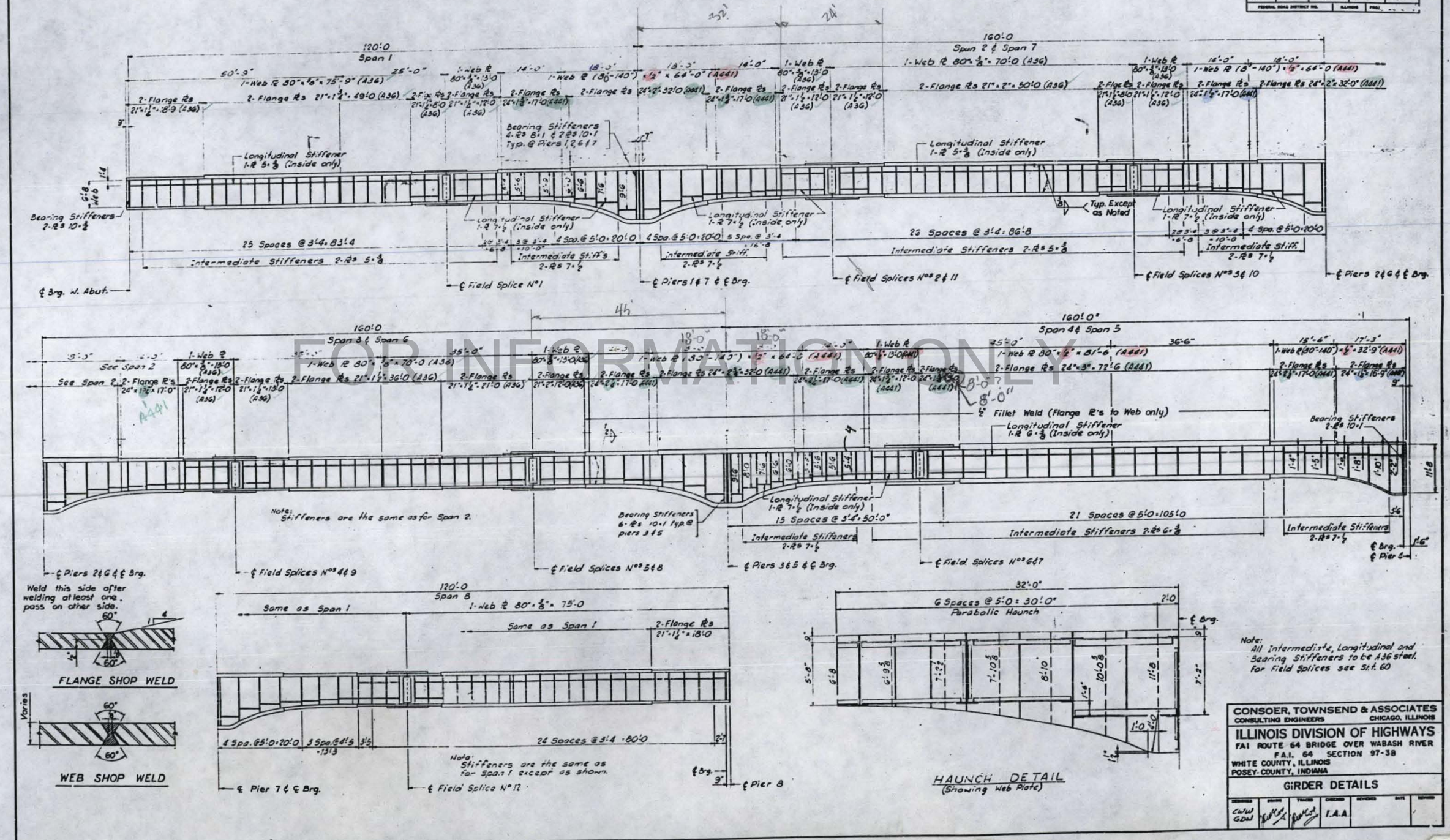

Note:
All Intermediate, Longitudinal and Bearing Stiffeners to be A36 steel.
For Field Splices see Sht. 60

FOR INFORMATION ONLY

CONSOER, TOWNSEND & ASSOCIATES
CONSULTING ENGINEERS — CHICAGO, ILLINOIS

ILLINOIS DIVISION OF HIGHWAYS
FAI ROUTE 64 BRIDGE OVER WABASH RIVER
F.A.I. 64 SECTION 97-3B
WHITE COUNTY, ILLINOIS
POSEY COUNTY, INDIANA

GIRDER DETAILS

DESIGNED	DRAWN	TRACED	CHECKED	REVISED	DATE	REVISED
CWW GDW			I.A.A.			

F.A.I. RTE. NO.	SECTION	COUNTY	TOTAL SHEETS	SHEET NO.
64	97-3B	White	103	58
FEDERAL ROAD DISTRICT NO.		STATE ILLINOIS		

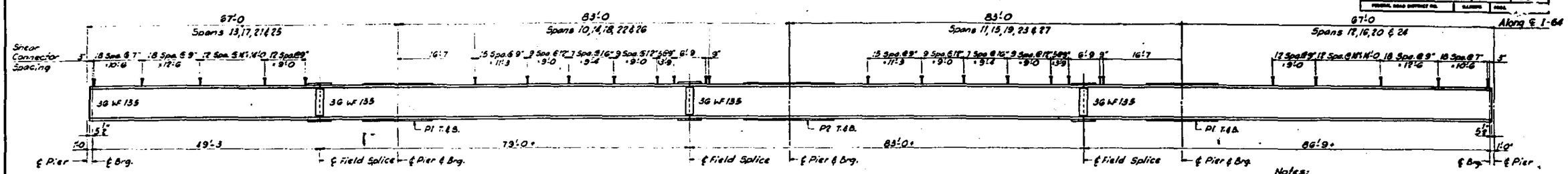

GIRDER ELEVATION - SPANS 10 THRU 27

Notes:
For Cover Plates see Sht. 60
For Field Splices see Sht. 60
For Span variations see Framing Plan.

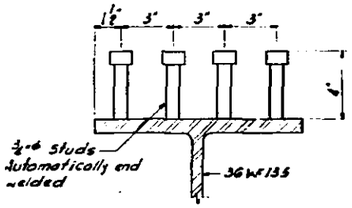

DETAIL OF SHEAR CONNECTORS

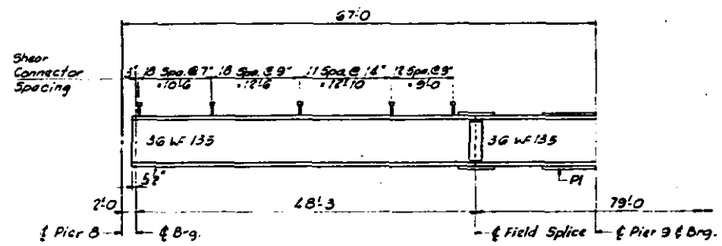

GIRDER ELEVATION - SPAN 9

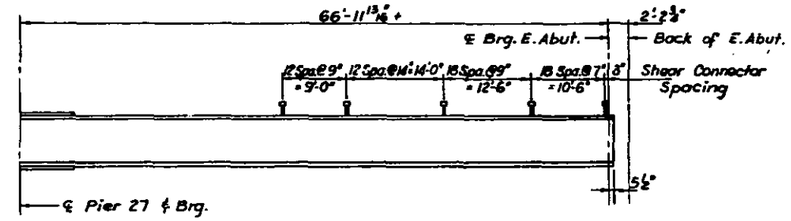

GIRDER ELEVATION - SPAN 28

FOR INFORMATION ONLY

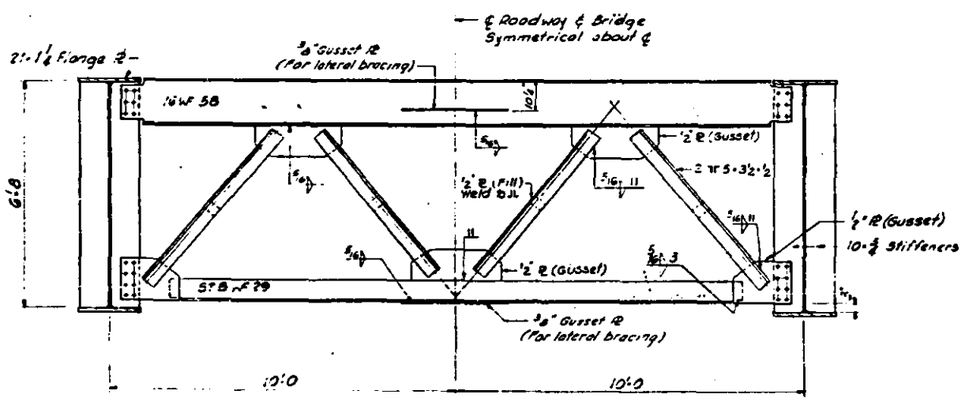

CROSS FRAME C1
West Abut. & Pier 8
(4 Reqd)

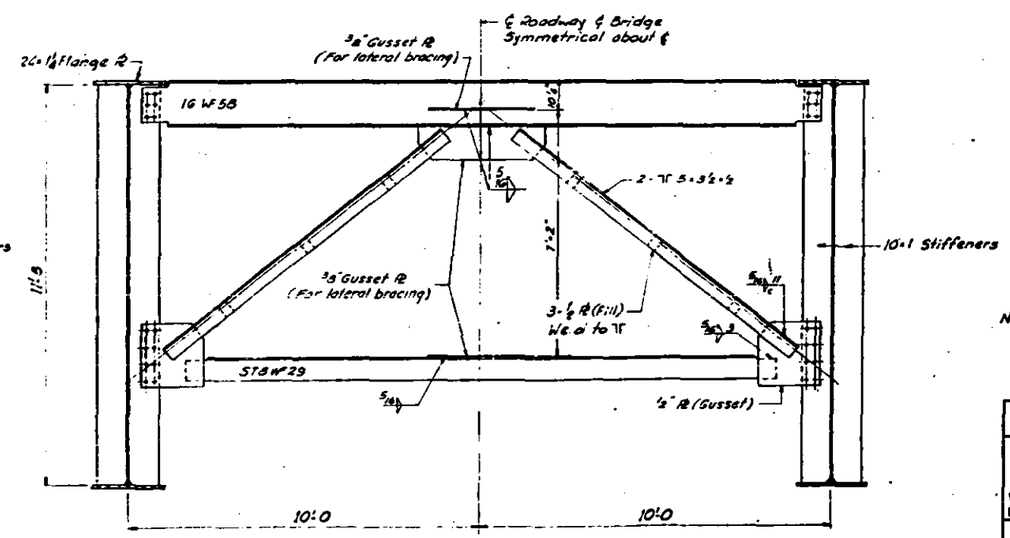

CROSS FRAME C2
Pier 9
(4 Reqd)

Note:
Use ⅞" ø High tensile bolts throughout.

CONSOER, TOWNSEND & ASSOCIATES
CONSULTING ENGINEERS CHICAGO, ILLINOIS

ILLINOIS DIVISION OF HIGHWAYS
FAI ROUTE 64 BRIDGE OVER WABASH RIVER
F.A.I. 64 SECTION 97-3B
WHITE COUNTY, ILLINOIS
POSEY COUNTY, INDIANA

GIRDER DETAILS

DESIGNED	DRAWN	TRACED	CHECKED	CHECKED	DATE	REVISED
D.W.P. I.A.A.			G.D.H.			

F.A.I. RTE. NO.	SECTION	COUNTY	TOTAL SHEETS	SHEET NO.
64	97-38	White	103	59
PERIODICAL ROAD DISTRICT NO.		ILLINOIS	FEDRAL	

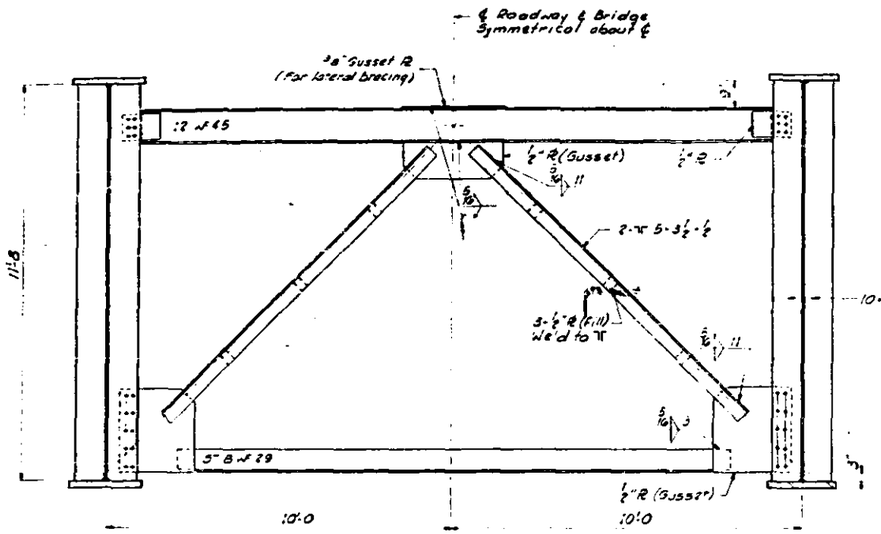

CROSS FRAME C3
Pier Nos 1,2,3,5,6 & 7
(12 Reqd.)

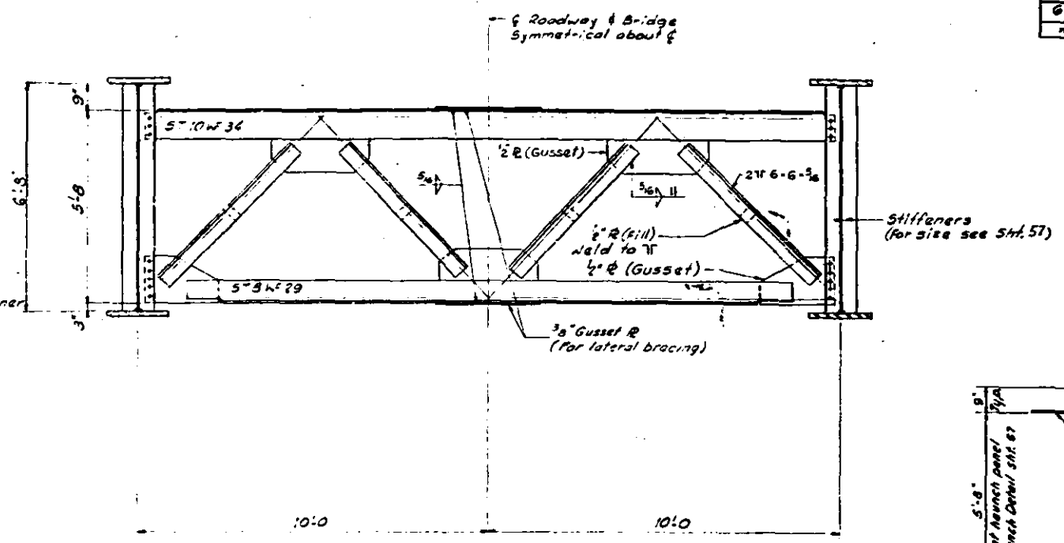

CROSS FRAME C4
Intermediate
(76 Reqd.)

FOR INFORMATION ONLY

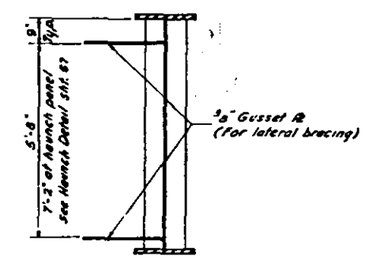

SECTION AT MID-PANEL
(Showing typ. gusset ℞ spacing for lateral bracing)

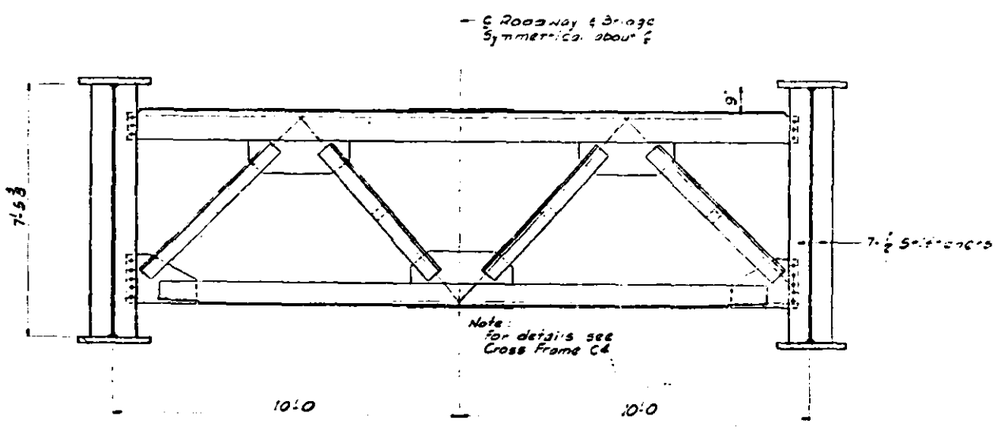

CROSS FRAME C5
Intermediate
(28 Reqd.)

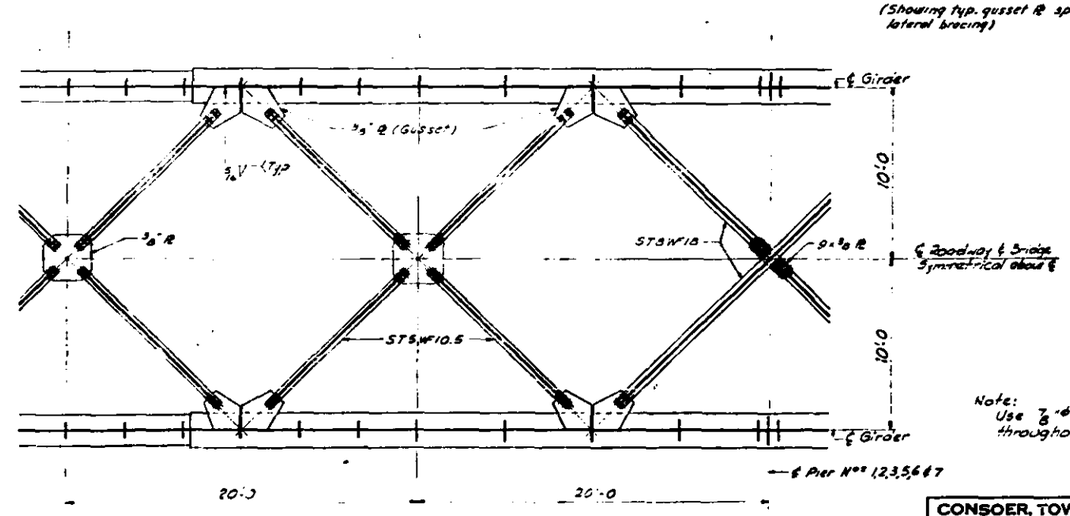

LATERAL BRACING

Note:
Use 7/8" ϕ High tensile bolts throughout.

CONSOER, TOWNSEND & ASSOCIATES
CONSULTING ENGINEERS CHICAGO, ILLINOIS

ILLINOIS DIVISION OF HIGHWAYS
FAI ROUTE 64 BRIDGE OVER WABASH RIVER
F.A.I. 64 SECTION 97-38
WHITE COUNTY, ILLINOIS
POSEY COUNTY, INDIANA

GIRDER DETAILS

DESIGNED	DRAWN	TRACED	CHECKED	REVISED	DATE	REVISED
IAA			GDW			

F.A.I. RTE. NO.	SECTION	COUNTY	TOTAL SHEETS	SHEET NO.
64	97-38	White	103	60
FEDERAL HIGHWAY DISTRICT NO.		ILLINOIS	FISCAL	

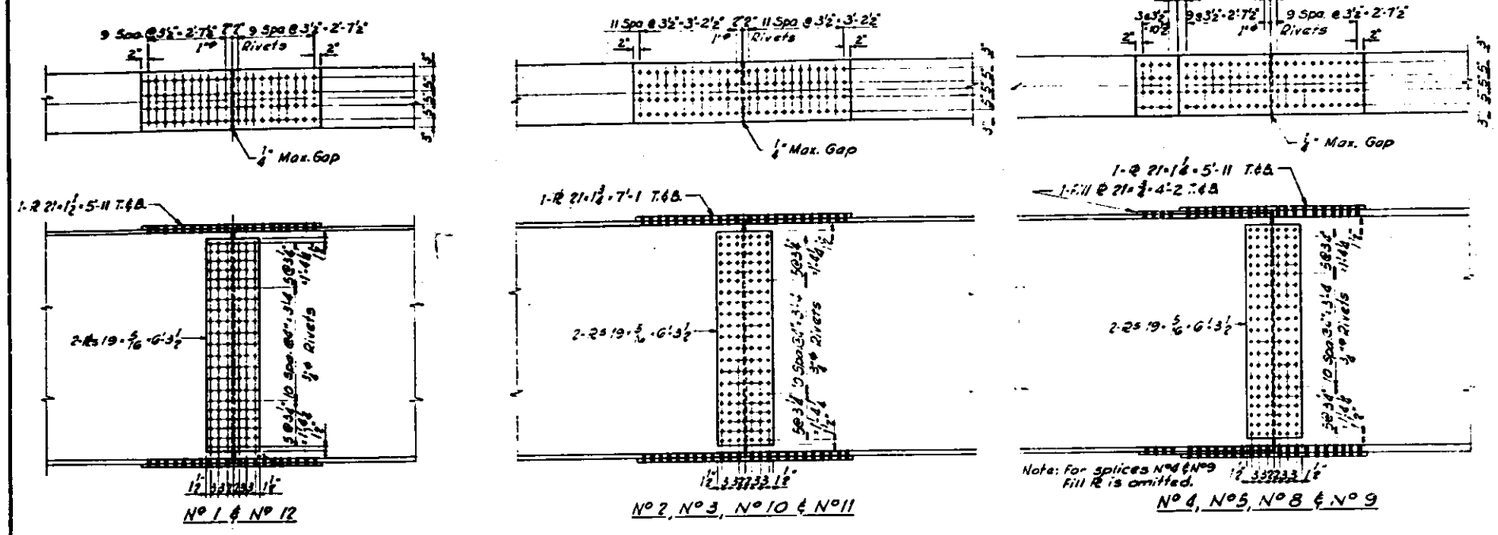

No 1 & No 12

No 2, No 3, No 10 & No 11

No 4, No 5, No 8 & No 9

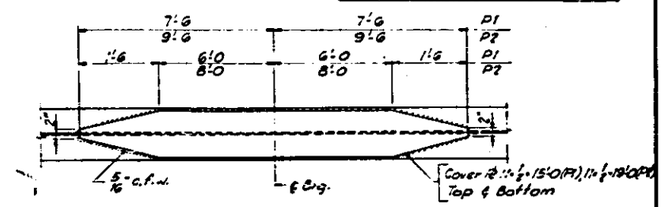

DETAIL OF COVER PLATES
(SPANS 9 THRU 28)

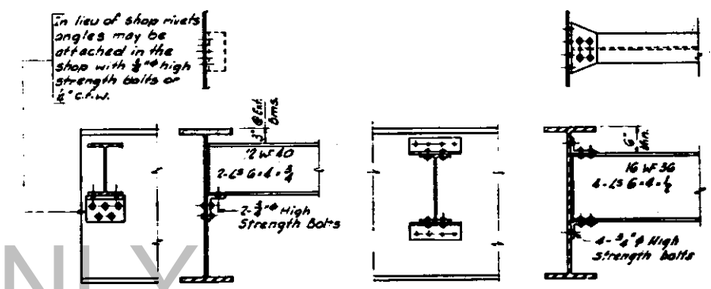

D1, D3, D4, D6, D7 & D11

D2, D5, D8, D9 & D10

DIAPHRAGMS
(SPANS 9 THRU 28)

DIAPHRAGM LENGTHS

Mark	Length ℄ to ℄ Girder	Beam Size	No. Req'd
D1	6'-5	12 WF 40	50
D2	6'-5	16 WF 36	150
D3	6'-5	12 WF 40	10
D4	6'-5	12 WF 40	10
D5	6'-4 3/8	16 WF 36	70
D6	6'-5	12 WF 40	10
D7	6'-5	12 WF 40	10
D8	6'-4 1/4	16 WF 36	20
D9	6'-4 3/8	16 WF 36	80
D10	6'-4 3/8	16 WF 36	30
D11	6'-5	12 WF 40	10

FOR INFORMATION ONLY

Note:
All Splice Material to be A36 Steel, except as noted

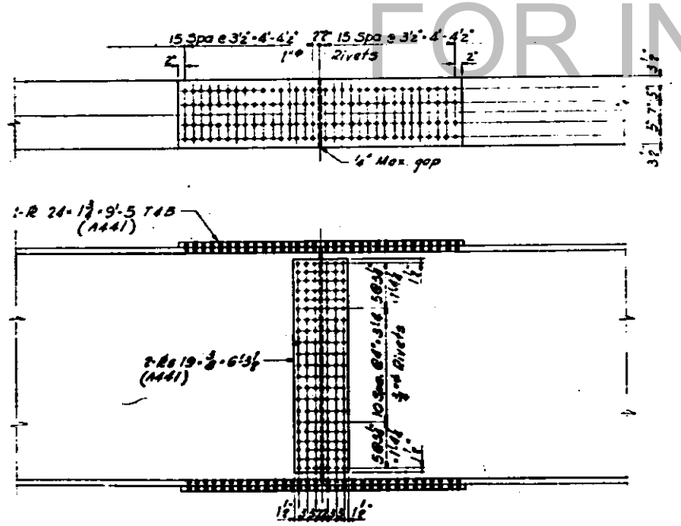

No 6 & No 7

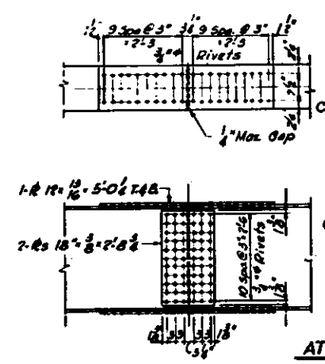

SPANS 9 THRU 27

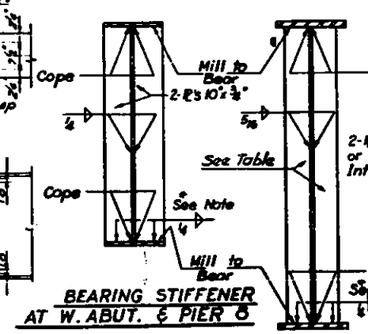

BEARING STIFFENER
AT W. ABUT. & PIER 8

BEARING STIFFENER
PIER 1 THRU 7

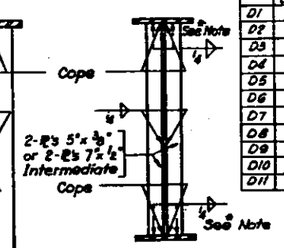

TYPICAL INTERMEDIATE
BEAM STIFFENER

F I E L D S P L I C E S

TABLE OF BEARING STIFFENERS

PIER	PLATE SIZES
1,2,6,7	2 PLs-10"×1" & 4 PLs-8"×1"
3,5	6 PLs-10"×1"
4	2 PLs-10"×1"

* Note:
Weld Intermediate Stiffeners to Compression Flange of Girder with ¼" Fillet Weld both Sides.

CONSOER, TOWNSEND & ASSOCIATES
CONSULTING ENGINEERS — CHICAGO, ILLINOIS

ILLINOIS DIVISION OF HIGHWAYS
FAI ROUTE 64 BRIDGE OVER WABASH RIVER
F.A.I. 64 SECTION 97-3B
WHITE COUNTY, ILLINOIS
POSEY COUNTY, INDIANA

GIRDER DETAILS

Checked I.A.A. | Drawn | Traced | Designed I.A.A.

F.A.I. RTE. NO.	SECTION	COUNTY	TOTAL SHEETS	SHEET NO.
64	97-38	White	103	61
FEDERAL ROAD DISTRICT NO.		ILLINOIS	FED. AID PROJ.	

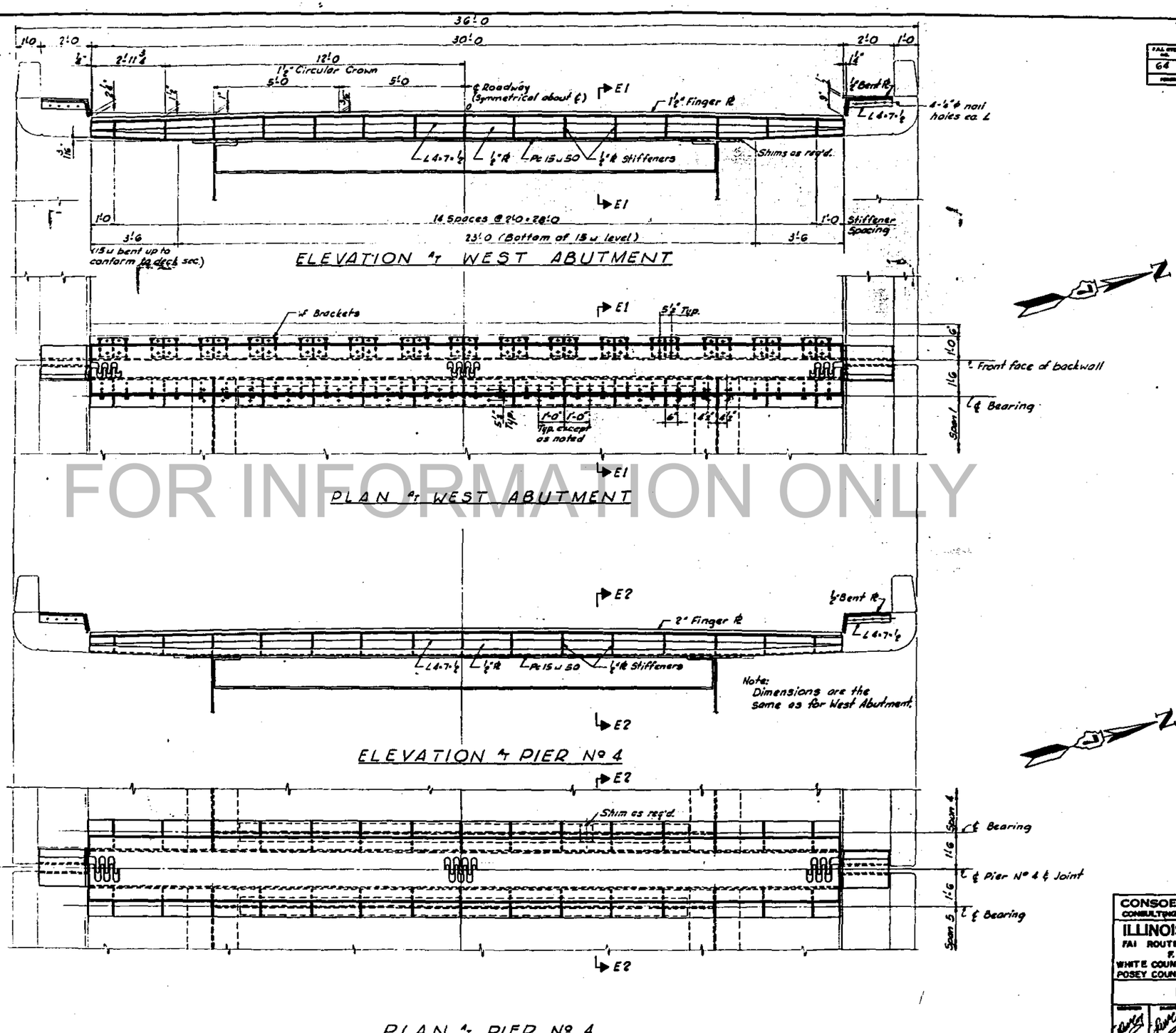

FOR INFORMATION ONLY

CONSOER, TOWNSEND & ASSOCIATES
CONSULTING ENGINEERS CHICAGO, ILLINOIS

ILLINOIS DIVISION OF HIGHWAYS
FAI ROUTE 64 BRIDGE OVER WABASH RIVER
F.A.I. 64 SECTION 97-38
WHITE COUNTY, ILLINOIS
POSEY COUNTY, INDIANA

EXPANSION DEVICES

DESIGNED	DRAWN	TRACED	CHECKED	REVISIONS	DATE	SHEET NO.
			IAA			1

F.A.I. RTE. NO.	SECTION	COUNTY	TOTAL SHEETS	SHEET NO.
64	97-38	White	103	68
FEDERAL ROAD DISTRICT NO.		ILLINOIS	FINAL	

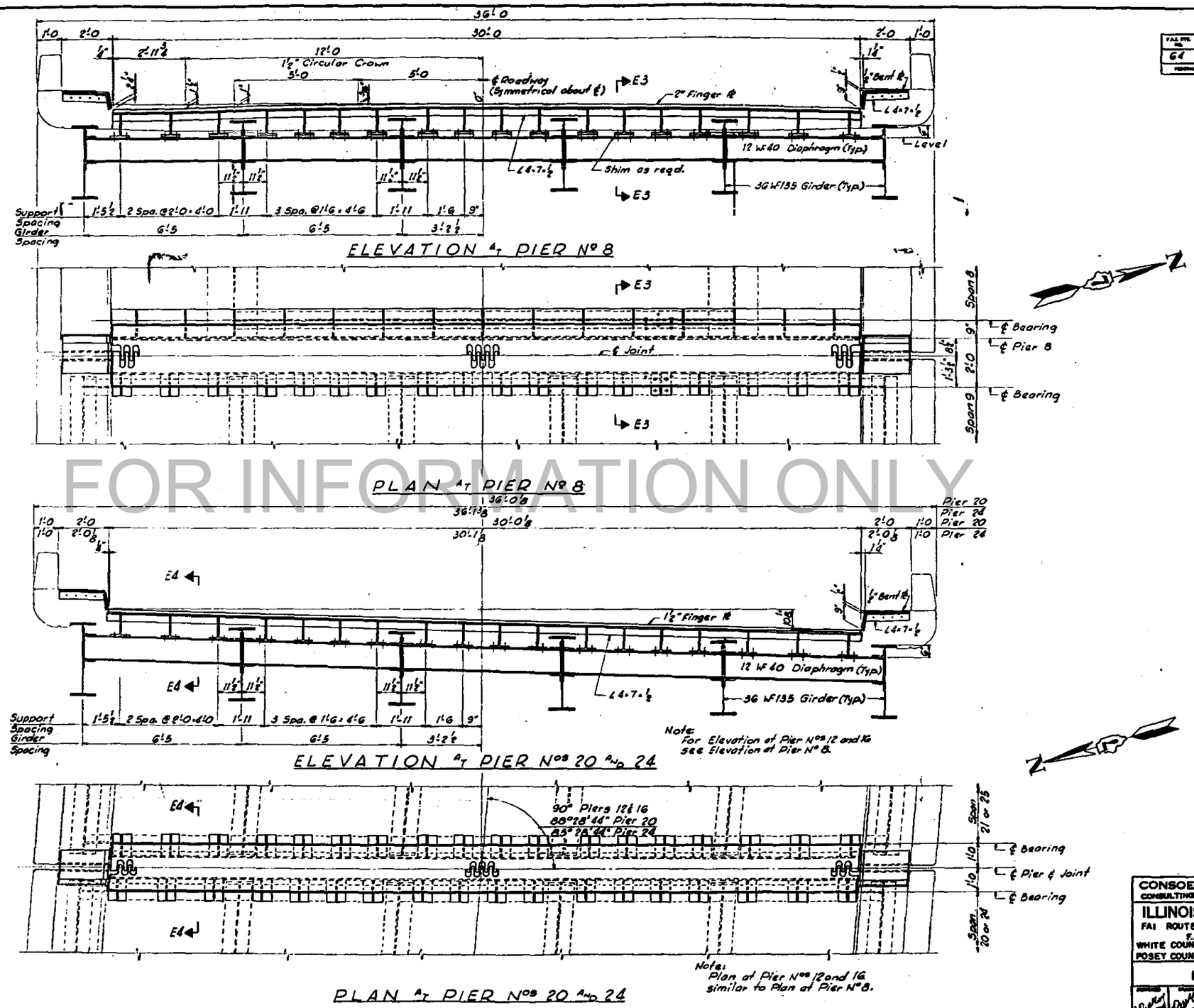

FOR INFORMATION ONLY

CONSOER, TOWNSEND & ASSOCIATES
CONSULTING ENGINEERS CHICAGO, ILLINOIS

ILLINOIS DIVISION OF HIGHWAYS
FAI ROUTE 64 BRIDGE OVER WABASH RIVER
F.A.I. 64 SECTION 97-38
WHITE COUNTY, ILLINOIS
POSEY COUNTY, INDIANA

EXPANSION DEVICES

DESIGNED	DRAWN	TRACED	CHECKED	REVISED	DATE	APPROVED
Parker	Parker	Parker	IAA			

F.A.I. RTE. NO.	SECTION	COUNTY	TOTAL SHEETS	SHEET NO.
64	97-3B	White	103	63
FEDERAL ROAD DISTRICT NO.		ILLINOIS	FHWA	

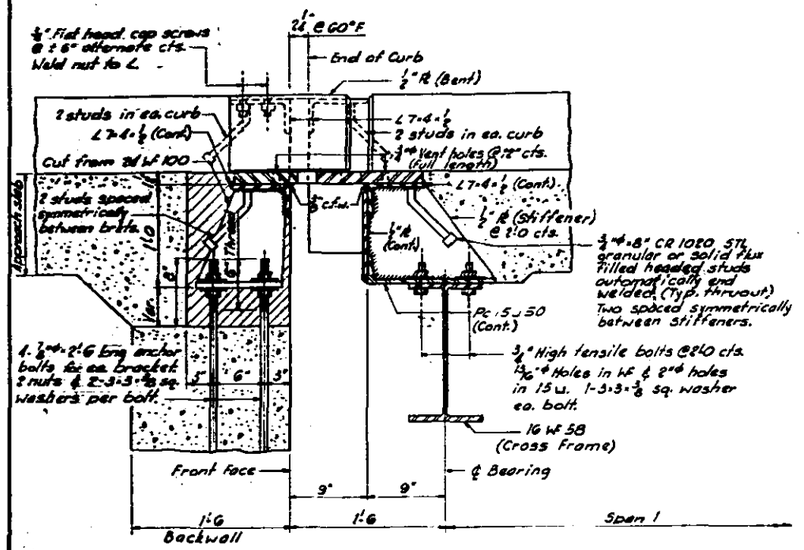

SECTION E1-E1
(West Abutment)

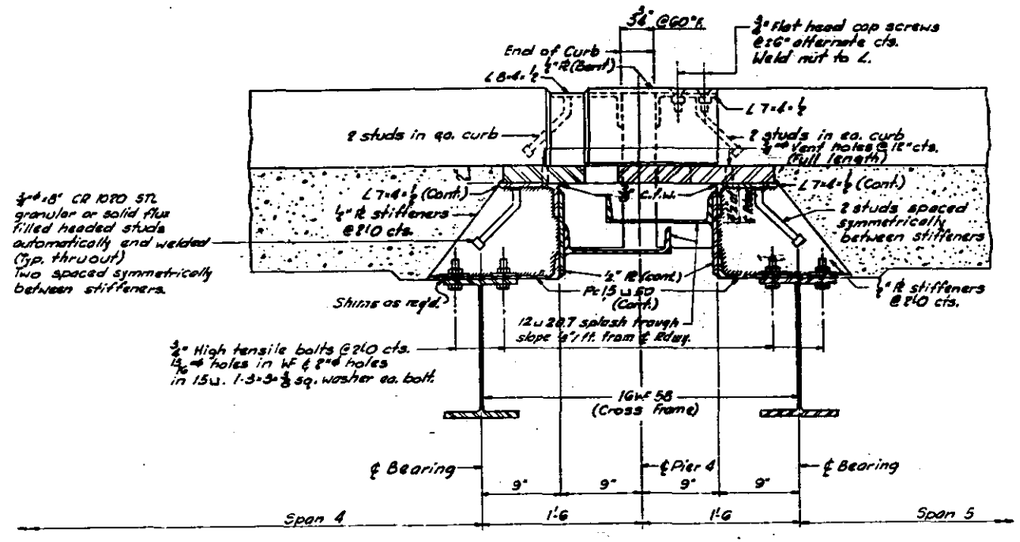

SECTION E2-E2
(Pier 4)

FOR INFORMATION ONLY

Note:
Provide 1-¼", 1-⅛" and 2-1/16" shims at each location as noted on sections.

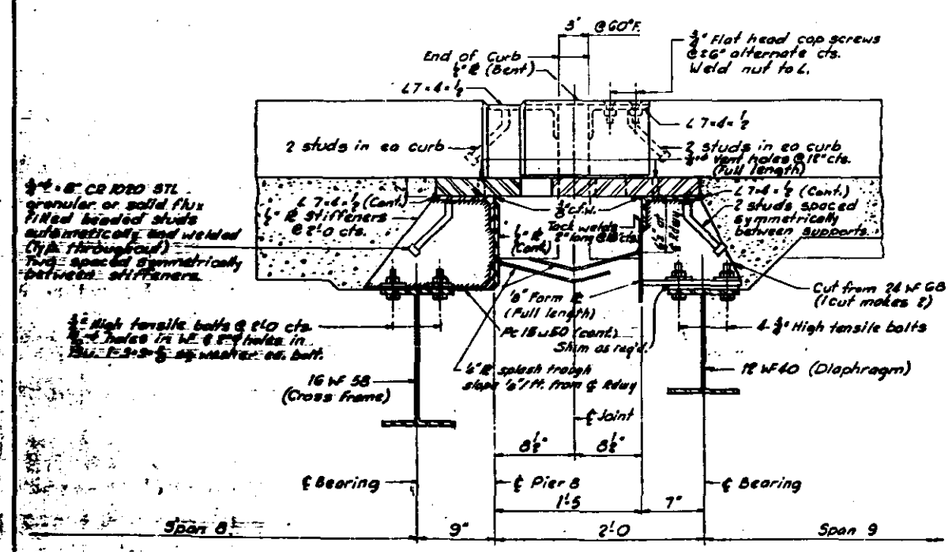

SECTION E3-E3
(Pier 8)

Note:
Provide 1-¼", 1-⅛" and 2-1/16" shims at each location as noted on sections.

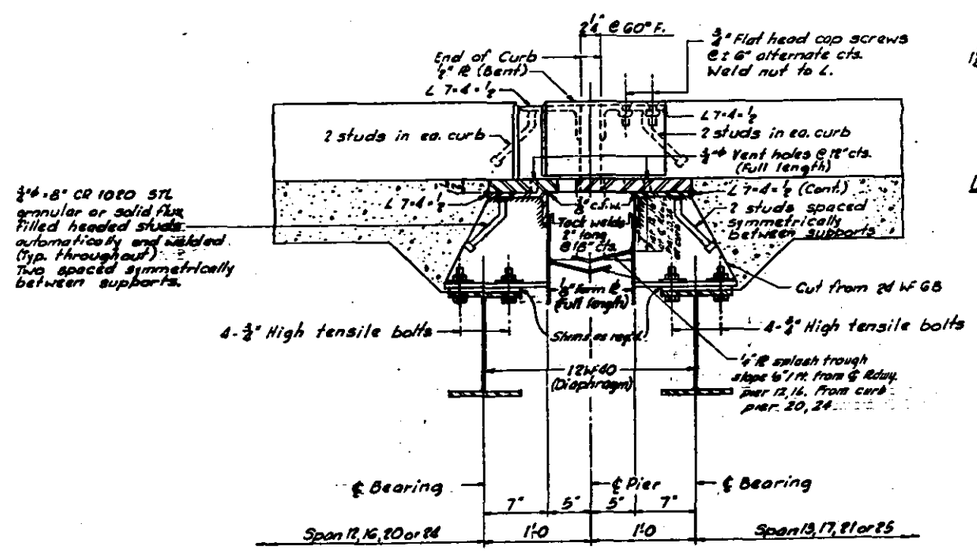

SECTION E4-E4
(Piers 12, 16, 20 & 24)

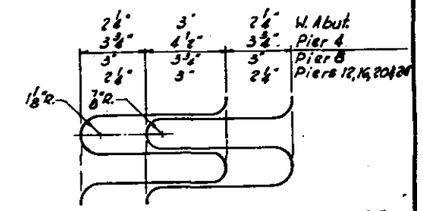

DETAILS OF FINGER PLATES
(Shown @ 60° F.)

Finger plate expansion devices shall be of corrosion resistant steel conforming to ASTM A242. Included in weight of steel for Expansion Devices shown on Sheet 51.

CONSOER, TOWNSEND & ASSOCIATES
CONSULTING ENGINEERS — CHICAGO, ILLINOIS

ILLINOIS DIVISION OF HIGHWAYS
FAI ROUTE 64 BRIDGE OVER WABASH RIVER
F.A.I. 64 SECTION 97-3B
WHITE COUNTY, ILLINOIS
POSEY COUNTY, INDIANA

EXPANSION DEVICE DETAILS

F.A.I. Rte. No.	Section	County	Total Sheets	Sheet No.
64	97-3B	White	103	68
Federal Aid Project No.		Illinois	FHWA	

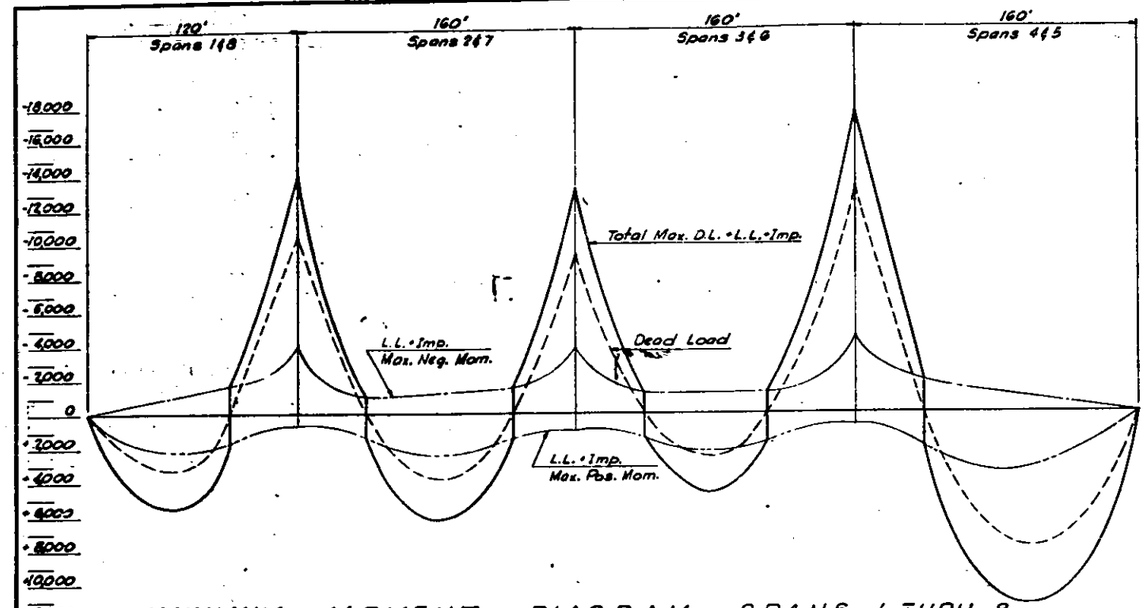

MAXIMUM MOMENT DIAGRAM - SPANS 1 THRU 8

1" Vert. = 4,000 Ft. Kips
1" Horiz. = 40 Ft.

FOR INFORMATION ONLY

SUMMARY OF MOMENTS AND REACTIONS - SPANS 1 THRU 8												
	MOMENTS								REACTIONS				
Load	.4 Span1	Pier 1	.5 Span2	Pier 2	.5 Span3	Pier 3	.6 Span4	W.Abut.	Pier 1	Pier 2	Pier 3	Pier 4
D.L.	3,118	-10,215	3,900	- 9,154	2,219	-13,215	8,444	163	687	647	805	267
L.L.	1,811	- 3,115	2,035	- 3,257	1,767	- 3,769	2,883	81	176	178	192	91
Imp.	369	- 548	358	- 573	311	- 663	507	16	35	33	36	16
Total	5,298	-13,874	6,293	-12,984	4,297	-17,638	11,834	260	898	858	1,033	374

SUMMARY OF MOMENTS AND REACTIONS INTERIOR GIRDERS - SPANS 9 THRU 28							
	MOMENTS				REACTIONS		
Load	.4 Span9	Pier 9	.5 Span10	Pier 10	Pier 8	Pier 9	Pier 10
D.L.	222	- 436	191	- 450	18	62	61
S.D.L.	69	- 92	73	- 103	7	20	21
L.L.	464	- 315	493	- 384	40	48	50
Imp.	121	- 78	118	- 89	10	12	12
Total	876	- 921	875	- 996	75	142	144

PROPERTIES OF GIRDERS SPANS 9 THRU 28			
INTERIOR		EXTERIOR	
STEEL SECTION			
I_s	11,376 in.^{4}	I_s	11,376 in.^{4}
S_{TS}	622 in.^{3}	S_{TS}	622 in.^{3}
S_{BS}	622 in.^{3}	S_{BS}	622 in.^{3}
COMPOSITE SECTION			
I_c	18,695 in.^{4}	I_c	26,565 in.^{4}
S_{TC}	3,225 in.^{3}	S_{TC}	22,740 in.^{3}
S_{BC}	616 in.^{3}	S_{BC}	758 in.^{3}

SUMMARY OF MOMENTS AND REACTIONS EXTERIOR GIRDERS - SPANS 9 THRU 28							
	MOMENTS				REACTIONS		
Load	.4 Span9	Pier 9	.5 Span10	Pier 10	Pier 8	Pier 9	Pier 10
D.L.	256	- 504	220	- 520	21	71	71
S.D.L.	91	- 105	100	- 120	5	16	16
L.L.	215	- 130	233	- 147	27	81	84
Imp.	56	- 33	56	- 37	7	20	20
Total	618	- 772	609	- 824	60	188	191

D.L. Dead Load
S.D.L. Superimposed D.L. acting on composite section
L.L. Live Load
Imp. Impact
I_s Moment of Inertia Steel Sec.
S_{TS} Sec. Mod. Top Steel Sec.
S_{BS} Sec. Mod. Bottom Steel Sec.
I_c Moment of Inertia Composite Sec.
S_{TC} Sec. Mod. Top Composite Sec.
S_{BC} Sec. Mod. Bottom Composite Sec.
Moments are in Ft.-Kips.
Reactions and Shears are in Kips.

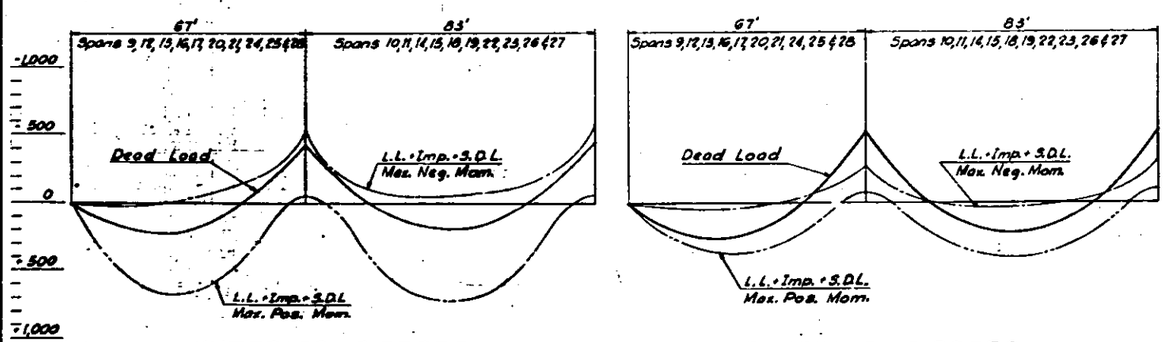

INTERIOR GIRDERS EXTERIOR GIRDERS

MAXIMUM MOMENT DIAGRAM - SPANS 9 THRU 28

1" Vert. = 500 Ft. Kips
1" Horiz. = 20 Ft.

SUMMARY OF SHEARS INTERIOR GIRDERS - SPANS 9 THRU 28									
Load	Supp't.	¼ Pt.	½ Pt.	Plate Cut-Off	Supp't.	Plate Cut-Off	¼ Pt.	Plate Cut-Off	Supp't.
D.L.	18	4	- 7	- 26	31	12	0	- 24	- 31
S.D.L.	6	2	- 2	- 8	10	8	0	- 8	- 10
L.L.	40	26	- 16	- 38	48	39	- 10	- 37	- 43
Imp.	11	7	- 7	- 10	11	7	- 3	- 9	- 10
Total	75	39	- 32	- 82	94	66	- 21	- 78	- 94

CONSOER, TOWNSEND & ASSOCIATES
CONSULTING ENGINEERS CHICAGO, ILLINOIS

ILLINOIS DIVISION OF HIGHWAYS
FAI ROUTE 64 BRIDGE OVER WABASH RIVER
F.A.I. 64 SECTION 97-3B
WHITE COUNTY, ILLINOIS
POSEY COUNTY, INDIANA

MOMENTS, REACTIONS, & SHEARS

DMP | | | IAR

F.A.I. RTE. NO.	SECTION	COUNTY	TOTAL SHEETS	SHEET NO.
64	97-3B	White	103	65
FEDERAL ROAD DISTRICT NO.		ILLINOIS	PROJ.	

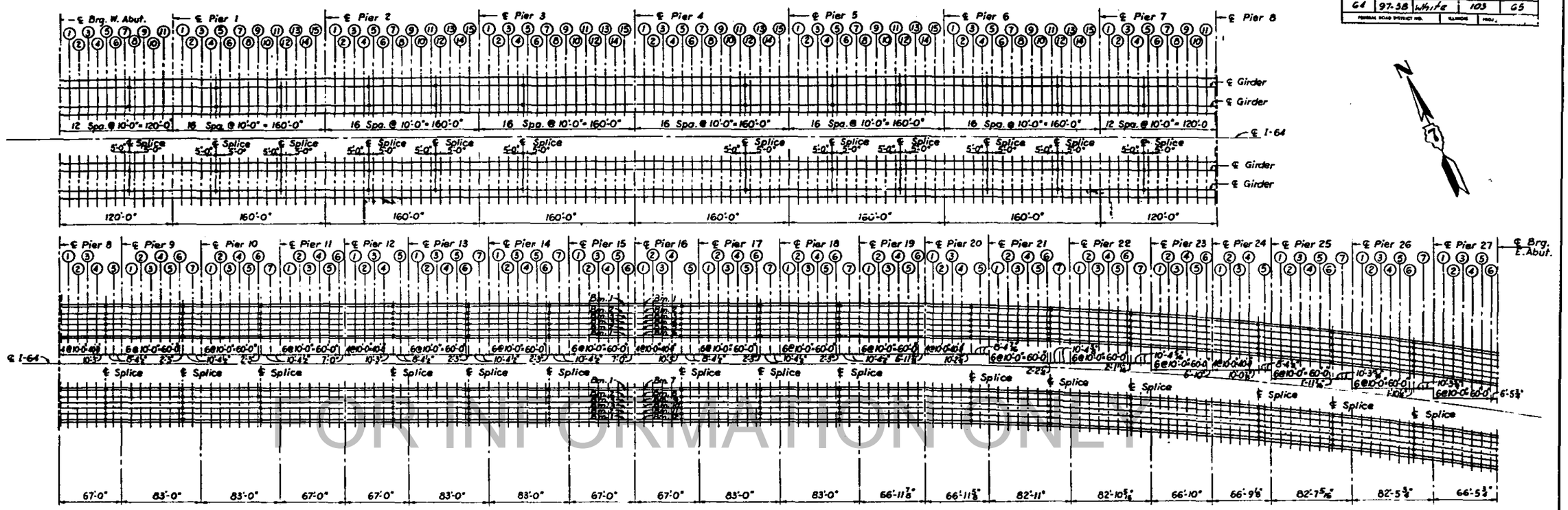

PLAN - LOCATION OF ADJUSTED GRADE ELEVATIONS TOP OF PAVING

All Dimensions are along Tangent to ℄ I-64 at P.C. Sta. 5894+77.90

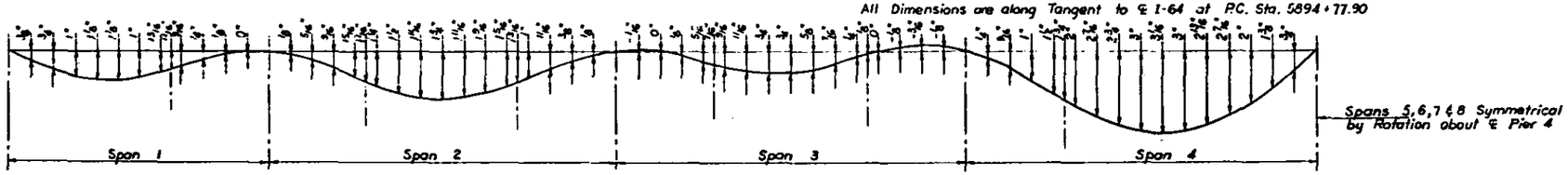

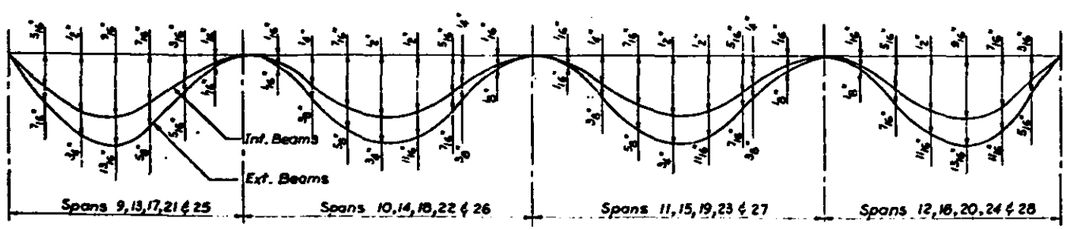

DEAD LOAD DEFLECTION DIAGRAM

Includes Weight of Concrete only

Note: The above deflections are not for use in the field if the Engineer is working from Theoretical Grade Elevations Adjusted for Dead Load Deflection.

FOR INFORMATION ONLY

CONSOER, TOWNSEND & ASSOCIATES
CONSULTING ENGINEERS CHICAGO, ILLINOIS

ILLINOIS DIVISION OF HIGHWAYS
FAI ROUTE 64 BRIDGE OVER WABASH RIVER
F.A.I. 64 SECTION 97-3B
WHITE COUNTY, ILLINOIS
POSEY COUNTY, INDIANA

ELEVATION KEY

DESIGNED	DRAWN	TRACED	CHECKED	APPROVED	DATE	REVISED
I.A.A.	T.L.	T.L.	D.M.P.			

F.A.I. RTE. NO.	SECTION	COUNTY	TOTAL SHEETS	SHEET NO.
64	97-3B	White	103	75
PROJECT NO.				

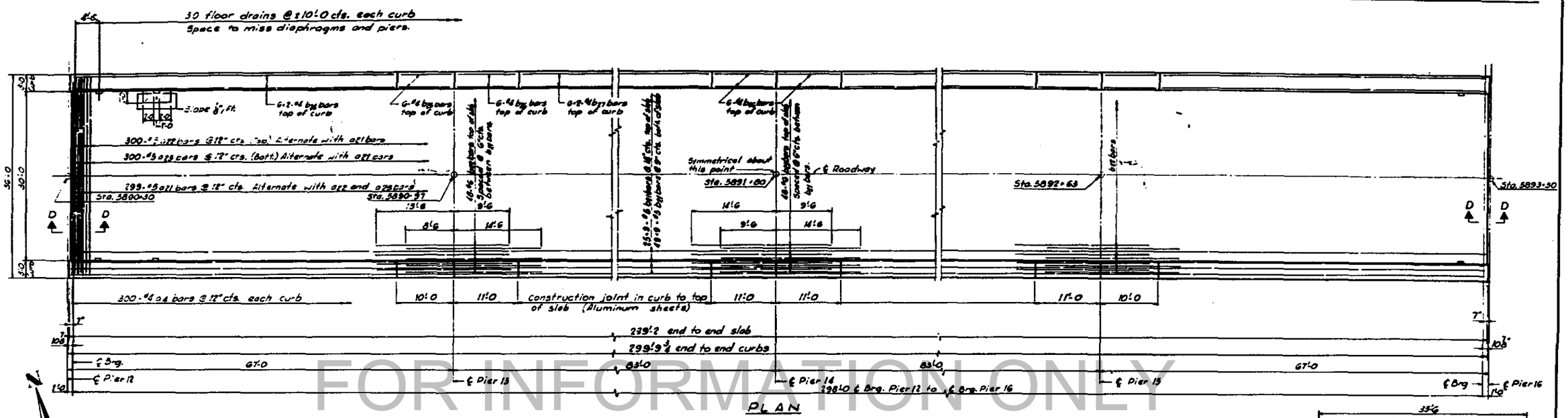

PLAN

FOR INFORMATION ONLY

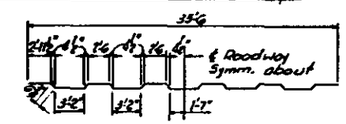

bz1 BAR

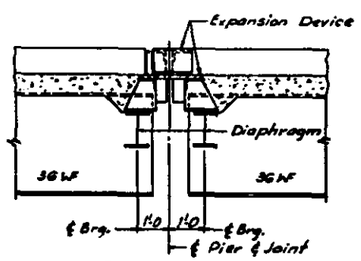

SECTION D-D

For details of expansion device see Sht. C2

BILL OF MATERIAL				
Bar	No	Size	Length	Shape
ax	5996	4	6'-6	
az	12912	4	3'-3	
az1	2994	5	37'-1	
az2	2994	5	35'-6	
az3	2994	5	34'-0	
bz1	6660	5	34'-6	
bz2	960	6	23'-0	
bz3	480	6	24'-0	
bz4	480	6	28'-9	
bz5	240	6	9'-9	
bz6	480	6	10'-9	
bz7	480	6	31'-0	
bz8	588	5	19'-9	
bz9	416	5	16'-9	
bz10	160	5	9'-9	
bz11	320	5	10'-9	
Reinforcement Bars			Lbs.	785,010
Class X Concrete			Cu. Yds.	4,094.0
Protective Coat			Sq. Yds.	9,950

Quantities shown are totals for W.B. & E.B. Structures from Pier B to E. Abut.

Use for W.B. & E.B. Structures

CONSOER, TOWNSEND & ASSOCIATES
CONSULTING ENGINEERS CHICAGO, ILLINOIS

ILLINOIS DIVISION OF HIGHWAYS
FAI ROUTE 64 BRIDGE OVER WABASH RIVER
F.A.I. 64 SECTION 97-3B
WHITE COUNTY, ILLINOIS
POSEY COUNTY, INDIANA

SUPERSTRUCTURE

D.M.P.			I.A.A.		

F.A.I. RTE. NO.	SECTION	COUNTY	TOTAL SHEETS	SHEET NO.
64	97-3B	White	103	74
FEDERAL ROAD DISTRICT NO.		ILLINOIS	FINAL	

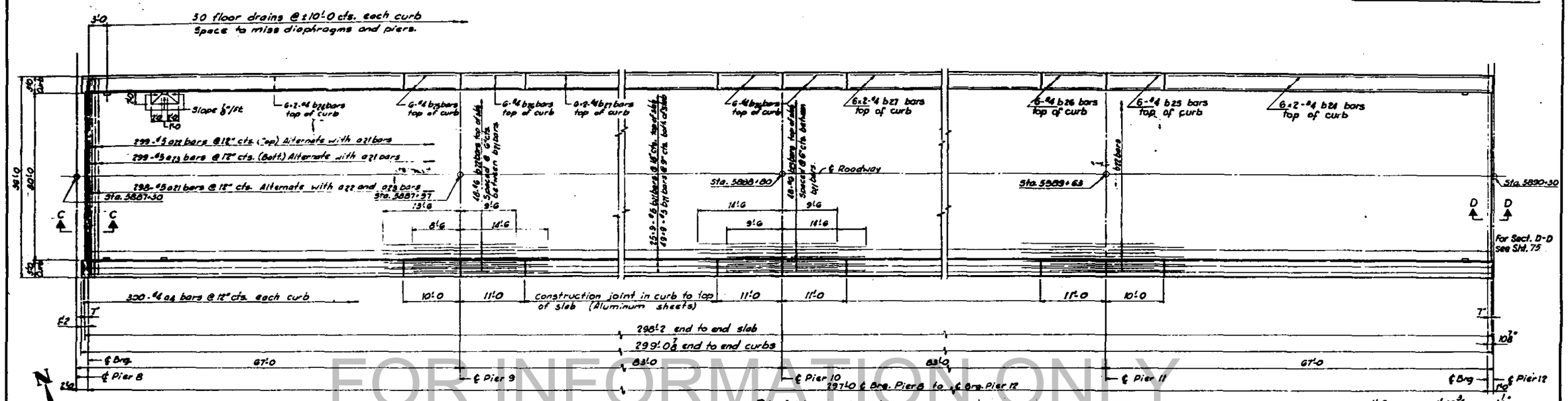

PLAN

FOR INFORMATION ONLY

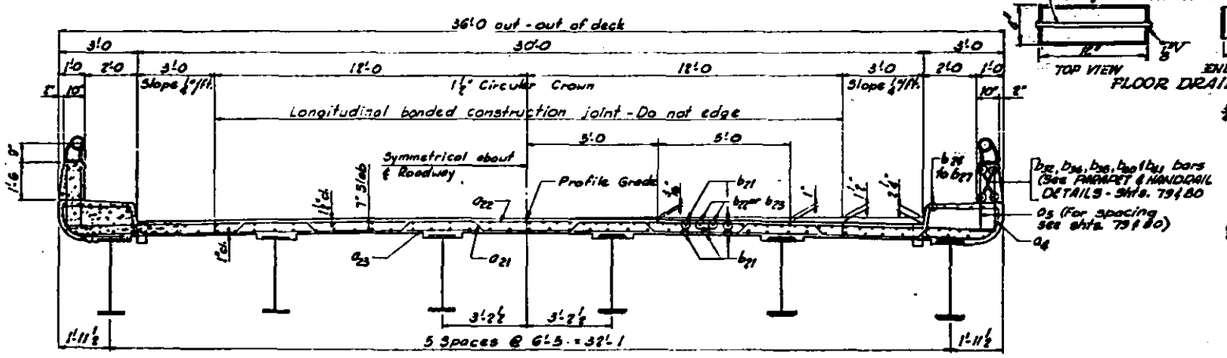

CROSS SECTION - TYPICAL PIER 8 TO PIER 16

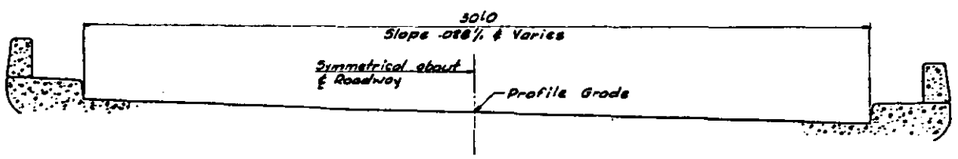

CROSS SECTION - TYPICAL PIER 16 TO E. ABUT.
(Normal to ℄ Roadway)

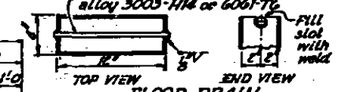

FLOOR DRAIN

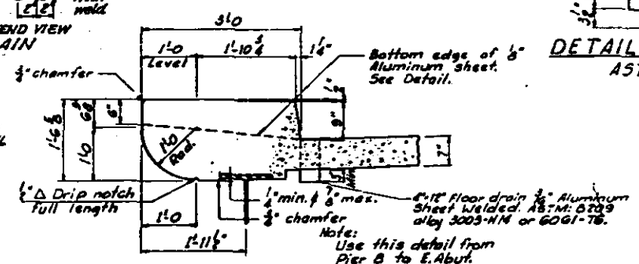

CURB DETAIL

Cost of aluminum drains & sheets shall be incidental to Class "X" Concrete.

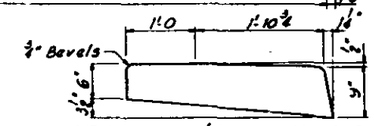

DETAILS OF 1/8" ALUMINUM SHEET

ASTM: B209 alloy 3003-H14

for the determination of "t", see note on sht. 72

STANDARD FILLET DETAIL

Pier No. 8 to E. Abut.

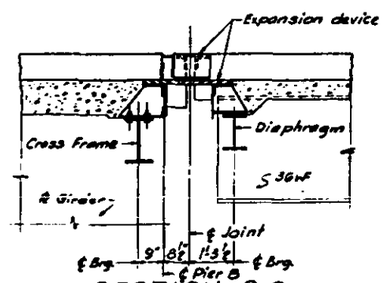

SECTION C-C

For details of expansion device see sht. 62

Use for W.B. & E.B. Structures

CONSOER, TOWNSEND & ASSOCIATES
CONSULTING ENGINEERS — CHICAGO, ILLINOIS

ILLINOIS DIVISION OF HIGHWAYS
FAI ROUTE 64 BRIDGE OVER WABASH RIVER
F.A.I. 64 SECTION 97-3B
WHITE COUNTY, ILLINOIS
POSEY COUNTY, INDIANA

SUPERSTRUCTURE

DIM.				I.A.A.		

F.A.I. RTE. NO.	SECTION	COUNTY	TOTAL SHEETS	SHEET NO.
64	97-3B	White	103	73
FEDERAL AID PROJECT NO.		ILLINOIS	FED. AID	

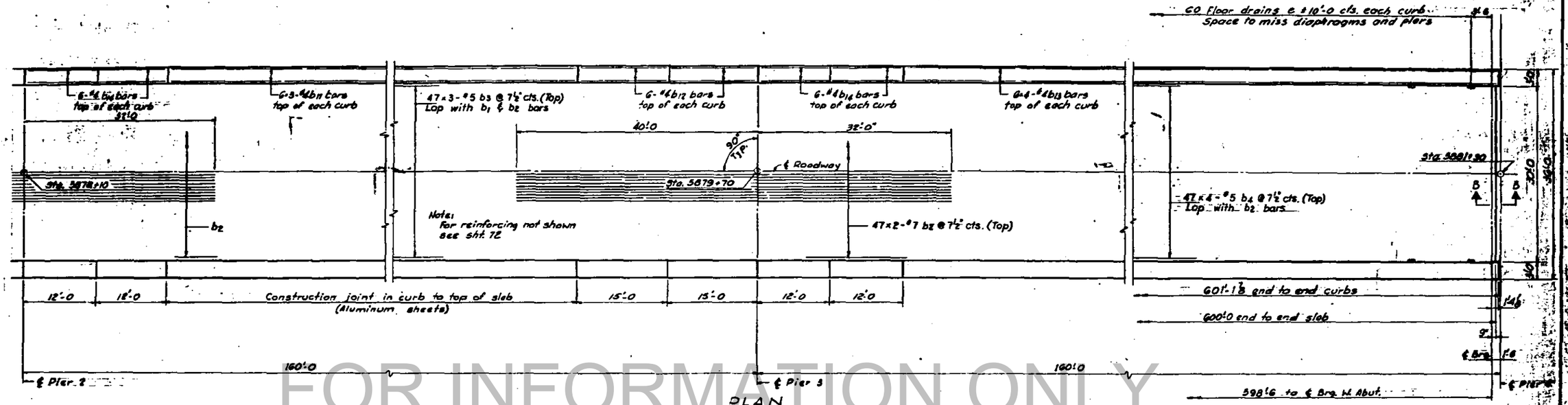

FOR INFORMATION ONLY

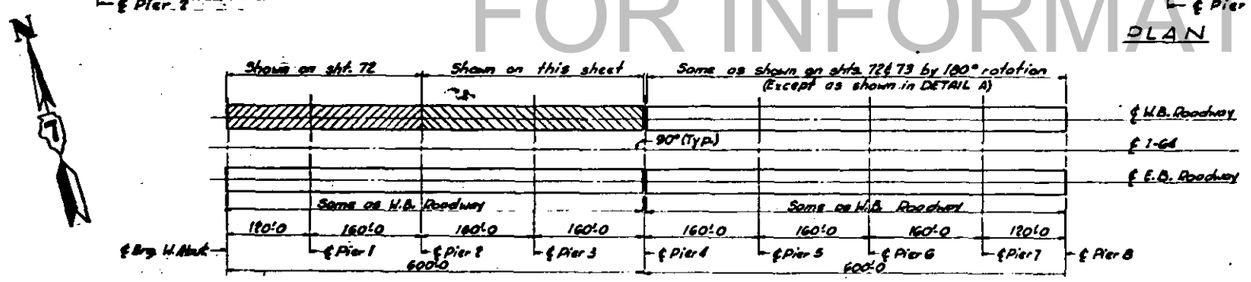

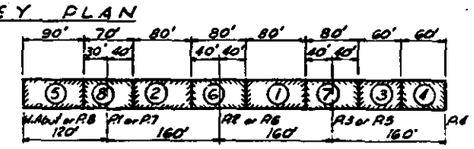

SEQUENCE OF CONCRETE POURS
TYPICAL W. ABUT. TO PIER 8

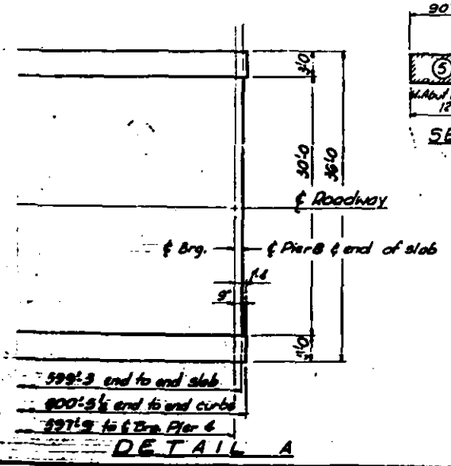

DETAIL A

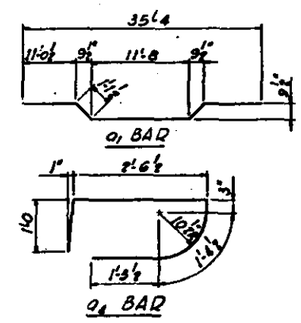

BILL OF MATERIAL				
Bar	No.	Size	Length	Shape
b1	1924	7	36'-0	
b2	3840	7	35'-6	
b3	1920	7	34'-0	
b4	4816	4	8'-6	
b5	16592	4	3'-3	
b1	752	7	34'-3	
b2	376	7	38'-8	
b3	1128	5	31'-0	
b4	1316	5	34'-0	
b5	1408	6	39'-0	
b6	1216	5	38'-9	
b7	144	4	33'-0	
b8	96	4	8'-9	
b9	144	4	39'-0	
b10	96	4	10'-3	
b11	144	4	36'-0	
b12	192	4	16'-9	
b13	192	4	35'-0	
b14	192	4	11'-9	
b21	48	5	17'-0	
b22	480	5	18'-0	
b23	48	5	8'-9	
b24	208	5	16'-9	
b25	160	5	21'-9	
b26	128	5	18'-9	
b27	64	5	10'-3	
b28	32	5	13'-6	
b29	16	5	16'-3	
Reinforcement Bars			Lbs.	933,710
Class "A" Concrete			Cu. Yds.	3,[illegible]
Protective Coat			Sq. Yds.	[illegible]

Quantities shown are totals for W.B. & E.B. structures from W. Abut. to Pier 8

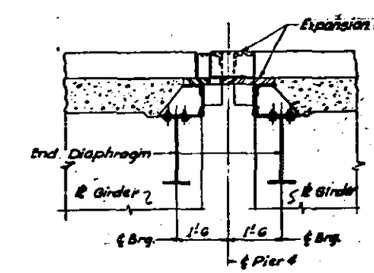

SECTION B-B
For details of expansion device see sht. 61

CONSOER, TOWNSEND & ASSOCIATES
CONSULTING ENGINEERS CHICAGO, ILLINOIS

ILLINOIS DIVISION OF HIGHWAYS
FAI- ROUTE 64 BRIDGE OVER WABASH RIVER
F.A.I. 64 SECTION 97-3B
WHITE COUNTY, ILLINOIS
POSEY COUNTY, INDIANA

SUPERSTRUCTURE

CWW GDW | [illegible] | [illegible] | I.A.A.

F.A.I. RTE. NO.	SECTION	COUNTY	TOTAL SHEETS	SHEET NO.
64	97-3B	White	103	72
PROJECT NUMBER CONTROL NO.			SUPERVISED	PROJ.

Notes:
Bars indicated thus: 47x2-#7 etc. indicates 47 lines of bars with 2 lengths per line.
MIN. bar lap 17, 20 dia.

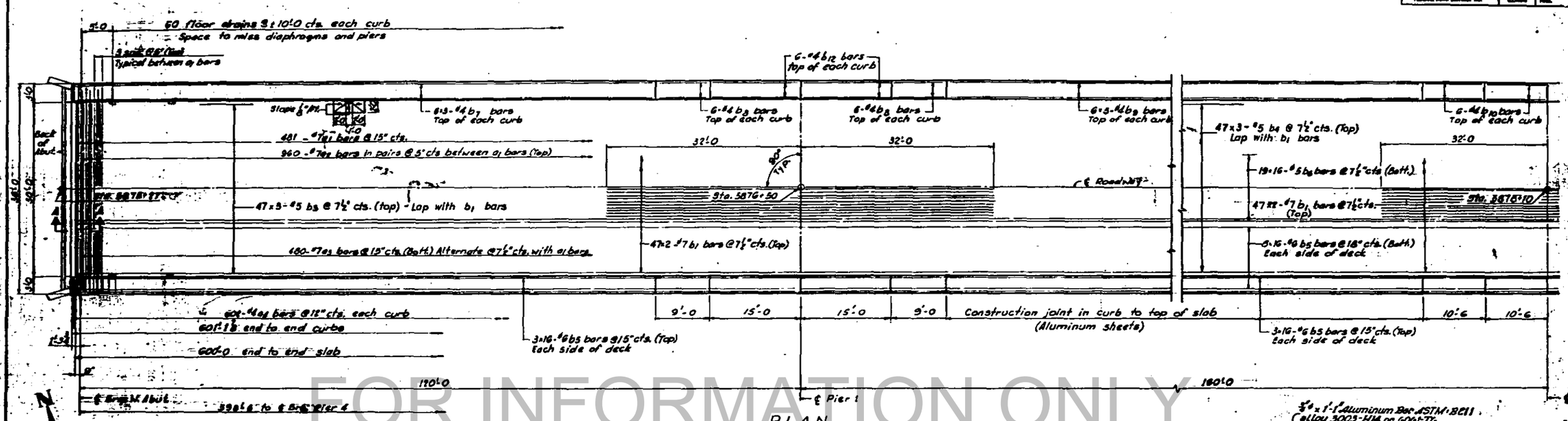

PLAN

FOR INFORMATION ONLY

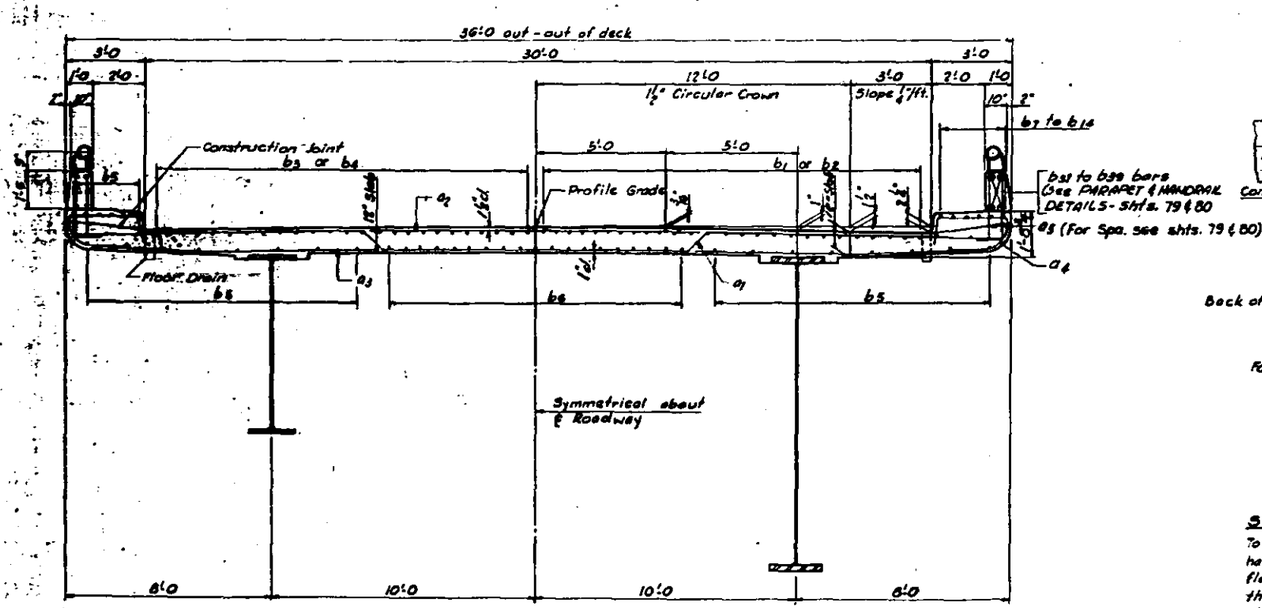

NEAR MIDSPAN — NEAR PIERS

CROSS SECTION - TYPICAL WEST ABUTMENT TO PIER 8

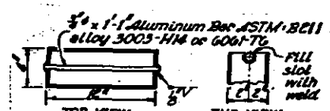

FLOOR DRAIN

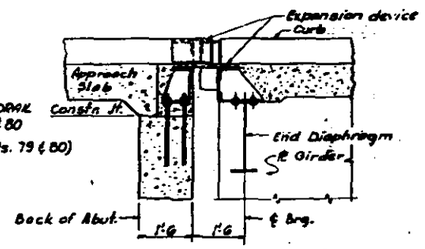

SECTION A-A

For details of expansion device see sht. 61

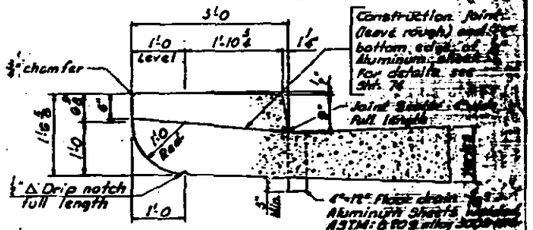

CURB DETAIL

Cost of aluminum drains and sheets shall be incidental to Class "K" Concrete.

Note:
Use this detail from W. Abut. to Pier 8.

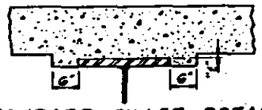

STANDARD FILLET DETAIL

To determine "t": After all structural steel has been erected, elevations of the top flanges of the beams shall be taken at the stations shown on sht. 65-71. These elevations subtracted from the "Theoretical Grade Elevations Adjusted for Dead Load Deflection" shown on sheets 65-71 minus floor thickness equals the fillet heights above top of beams.

CONSOER, TOWNSEND & ASSOCIATES
CONSULTING ENGINEERS — CHICAGO, ILLINOIS

ILLINOIS DIVISION OF HIGHWAYS
FAI ROUTE 64 BRIDGE OVER WABASH RIVER
F.A.I. 64 SECTION 97-3B
WHITE COUNTY, ILLINOIS
POSEY COUNTY, INDIANA

SUPERSTRUCTURE — STEEL

DESIGNED	CHECKED	DRAWN	CHECKED	DATE	SHEET
CWM & DW			I.A.A.		

THEORETICAL AND ADJUSTED ELEVATIONS AT TOP OF PAVING - EAST BOUND

F.A.I. RTE. NO.	SECTION	COUNTY	TOTAL SHEETS	SHEET NO.
64	97-3B	White	103	71
FEDERAL ROAD DISTRICT NO.		ILLINOIS	PROJ.	

SPAN 24
EAST BOUND

BM. NO.	LINE NO.	STATION	ELEV. I	ELEV. II
7	℄ PIER 23	589884.888	403.432	403.432
	1	589874.972	403.401	403.400
	2	589885.047	403.371	403.406
	3	589895.122	403.341	403.398
	4	589905.197	403.311	403.377
	5	589915.271	403.282	403.337
	6	589925.346	403.252	403.276
	℄ PIER 24	589932.217	403.234	403.234
8	℄ PIER 23	589865.333	403.252	403.252
	1	589875.419	403.221	403.228
	2	589885.505	403.190	403.214
	3	589895.582	403.160	403.200
	4	589905.676	403.130	403.175
	5	589915.764	403.101	403.139
	6	589925.850	403.073	403.090
	℄ PIER 24	589932.729	403.054	403.054
9	℄ PIER 23	589865.770	403.071	403.071
	1	589875.867	403.040	403.047
	2	589885.965	403.009	403.028
	3	589896.062	402.979	403.019
	4	589906.160	402.950	402.995
	5	589916.257	402.921	402.960
	6	589926.354	402.892	402.909
	℄ PIER 24	589933.241	402.873	402.873
10	℄ PIER 23	589866.206	402.890	402.890
	1	589876.316	402.860	402.863
	2	589886.425	402.829	402.838
	3	589896.535	402.799	402.819
	4	589906.643	402.769	402.814
	5	589916.752	402.740	402.778
	6	589926.860	402.712	402.729
	℄ PIER 24	589933.754	402.692	402.692
11	℄ PIER 23	589866.696	402.710	402.710
	1	589876.767	402.679	402.686
	2	589886.867	402.648	402.672
	3	589896.967	402.618	402.658
	4	589907.127	402.588	402.634
	5	589917.287	402.558	402.588
	6	589927.367	402.531	402.548
	℄ PIER 24	589934.270	402.512	402.512
12	℄ PIER 23	589867.084	402.529	402.529
	1	589877.218	402.498	402.507
	2	589887.349	402.468	402.503
	3	589897.481	402.438	402.496
	4	589907.613	402.408	402.474
	5	589917.744	402.379	402.434
	6	589927.875	402.350	402.375
	℄ PIER 24	589934.786	402.331	402.331

SPAN 25
EAST BOUND

BM. NO.	LINE NO.	STATION	ELEV. I	ELEV. II
7	℄ PIER 24	589932.217	403.234	403.234
	1	589942.301	403.203	403.238
	2	589952.385	403.173	403.233
	3	589962.469	403.142	403.206
	4	589972.553	403.113	403.164
	℄ SPLICE	589982.711	403.083	403.109
	5	589991.135	403.057	403.064
	℄ PIER 25	589989.554	403.031	403.031
8	℄ PIER 24	589922.729	403.054	403.054
	1	589942.824	403.023	403.047
	2	589952.919	402.992	403.033
	3	589963.015	402.962	403.007
	4	589973.110	402.932	402.967
	℄ SPLICE	589983.279	402.902	402.921
	5	589991.712	402.876	402.881
	℄ PIER 25	590000.141	402.850	402.850
9	℄ PIER 24	589933.241	402.873	402.873
	1	589943.348	402.842	402.864
	2	589953.454	402.811	402.852
	3	589963.561	402.781	402.826
	4	589973.668	402.751	402.786
	℄ SPLICE	589983.840	402.722	402.740
	5	589992.291	402.695	402.700
	℄ PIER 25	590000.729	402.669	402.669
10	℄ PIER 24	589933.754	402.692	402.692
	1	589943.873	402.661	402.685
	2	589953.991	402.631	402.672
	3	589964.108	402.600	402.645
	4	589974.227	402.571	402.606
	℄ SPLICE	589984.419	402.541	402.558
	5	589992.871	402.515	402.520
	℄ PIER 25	590001.318	402.488	402.488
11	℄ PIER 24	589934.270	402.512	402.512
	1	589944.389	402.481	402.505
	2	589954.528	402.450	402.481
	3	589964.658	402.420	402.445
	4	589974.787	402.390	402.425
	℄ SPLICE	589984.980	402.361	402.373
	5	589993.452	402.334	402.339
	℄ PIER 25	590001.909	402.308	402.308
12	℄ PIER 24	589934.786	402.331	402.331
	1	589944.926	402.300	402.335
	2	589955.067	402.269	402.329
	3	589965.208	402.239	402.305
	4	589975.348	402.209	402.260
	℄ SPLICE	589985.564	402.180	402.206
	5	589994.035	402.153	402.160
	℄ PIER 25	590002.502	402.127	402.127

SPAN 26
EAST BOUND

BM. NO.	LINE NO.	STATION	ELEV. I	ELEV. II
7	℄ PIER 25	589989.564	402.031	402.031
	1	590000.648	402.990	402.005
	2	590010.742	402.960	402.000
	3	590020.836	402.929	402.993
	4	590030.930	402.909	402.973
	5	590040.024	402.880	402.939
	6	590050.118	402.852	402.890
	℄ SPLICE	590062.092	402.846	402.878
	7	590072.537	402.813	402.821
	℄ PIER 26	590082.965	402.780	402.780
8	℄ PIER 25	590000.191	402.850	402.850
	1	590010.266	402.819	402.824
	2	590020.352	402.788	402.809
	3	590030.457	402.758	402.795
	4	590040.563	402.729	402.773
	5	590050.668	402.700	402.740
	6	590060.773	402.671	402.697
	℄ SPLICE	590072.750	402.646	402.648
	7	590073.206	402.632	402.638
	℄ PIER 26	590083.696	402.600	402.600
9	℄ PIER 25	590000.729	402.669	402.669
	1	590010.848	402.638	402.643
	2	590020.963	402.608	402.629
	3	590031.079	402.578	402.615
	4	590041.196	402.548	402.582
	5	590051.313	402.519	402.550
	6	590061.429	402.490	402.516
	℄ SPLICE	590083.408	402.485	402.507
	7	590073.676	402.472	402.458
	℄ PIER 26	590084.328	402.419	402.419
10	℄ PIER 25	590001.318	402.488	402.488
	1	590011.447	402.457	402.462
	2	590021.576	402.427	402.448
	3	590031.702	402.397	402.439
	4	590041.831	402.367	402.441
	5	590051.958	402.338	402.370
	6	590062.087	402.310	402.335
	℄ SPLICE	590084.068	402.304	402.325
	7	590074.546	402.271	402.277
	℄ PIER 26	590085.011	402.238	402.238
11	℄ PIER 25	590001.909	402.308	402.308
	1	590012.040	402.277	402.282
	2	590022.189	402.246	402.267
	3	590032.328	402.216	402.253
	4	590042.468	402.187	402.231
	5	590052.607	402.158	402.198
	6	590062.746	402.129	402.155
	℄ SPLICE	590084.730	402.123	402.145
	7	590075.221	402.090	402.086
	℄ PIER 26	590085.696	402.057	402.057
12	℄ PIER 25	590002.502	402.127	402.127
	1	590012.653	402.096	402.103
	2	590022.804	402.065	402.086
	3	590032.955	402.035	402.069
	4	590043.106	402.006	402.070
	5	590053.257	401.977	402.036
	6	590063.407	401.948	401.986
	℄ SPLICE	590085.393	401.943	401.975
	7	590075.896	401.909	401.917
	℄ PIER 26	590086.383	401.877	401.877

SPAN 27
EAST BOUND

BM. NO.	LINE NO.	STATION	ELEV. I	ELEV. II
7	℄ PIER 26	590082.965	402.780	402.780
	1	590093.075	402.790	402.756
	2	590103.185	402.718	402.748
	3	590113.296	402.688	402.742
	4	590123.406	402.658	402.722
	5	590133.516	402.629	402.687
	6	590143.626	402.600	402.639
	℄ SPLICE	590146.806	402.595	402.628
	7	SL 1195.988	402.582	402.570
	℄ PIER 27	590160.383	402.529	402.529
8	℄ PIER 26	590083.696	402.600	402.600
	1	590093.797	402.569	402.573
	2	590103.898	402.538	402.558
	3	590114.000	402.507	402.543
	4	590124.100	402.478	402.521
	5	590134.251	402.448	402.488
	6	590144.372	402.420	402.447
	℄ SPLICE	590146.296	402.414	402.436
	7	590154.720	402.384	402.387
	℄ PIER 27	590167.157	402.348	402.348
9	℄ PIER 26	590084.328	402.419	402.419
	1	590094.440	402.388	402.393
	2	590104.553	402.357	402.377
	3	590114.725	402.327	402.363
	4	590124.898	402.297	402.340
	5	590134.990	402.268	402.308
	6	590145.122	402.239	402.266
	℄ SPLICE	590147.008	402.234	402.256
	7	590157.484	402.208	402.206
	℄ PIER 27	590167.932	402.167	402.167
10	℄ PIER 26	590085.011	402.238	402.238
	1	590095.155	402.207	402.212
	2	590105.299	402.176	402.196
	3	590115.443	402.146	402.127
	4	590125.587	402.116	402.158
	5	590135.731	402.087	402.127
	6	590145.876	402.058	402.085
	℄ SPLICE	590147.762	402.053	402.075
	7	590158.250	402.019	402.025
	℄ PIER 27	590168.710	401.987	401.987
11	℄ PIER 26	590085.696	402.057	402.057
	1	590095.851	402.026	402.031
	2	590106.007	401.995	402.015
	3	590116.162	401.965	402.001
	4	590126.317	401.935	401.978
	5	590136.472	401.906	401.946
	6	590146.628	401.877	401.904
	℄ SPLICE	590148.518	401.872	401.894
	7	590158.017	401.839	401.845
	℄ PIER 27	590168.488	401.808	401.808
12	℄ PIER 26	590086.383	401.877	401.877
	1	590096.549	401.845	401.852
	2	590106.716	401.815	401.845
	3	590116.883	401.784	401.839
	4	590127.050	401.755	401.819
	5	590137.216	401.726	401.784
	6	590147.383	401.697	401.736
	℄ SPLICE	590149.275	401.691	401.724
	7	590159.784	401.658	401.644
	℄ PIER 27	590170.270	401.625	401.625

SPAN 28
EAST BOUND

BM. NO.	LINE NO.	STATION	ELEV. I	ELEV. II
7	℄ PIER 27	590166.383	402.529	402.529
	1	590176.511	402.497	402.506
	2	590186.638	402.466	402.501
	3	590196.766	402.436	402.494
	4	590206.894	402.406	402.472
	5	590217.021	402.377	402.432
	6	590227.149	402.348	402.373
	℄ BRG. E. ABUT.	590233.709	402.330	402.330
8	℄ PIER 27	590167.157	402.348	402.348
	1	590177.296	402.317	402.324
	2	590187.435	402.286	402.310
	3	590197.574	402.256	402.295
	4	590207.713	402.226	402.271
	5	590217.852	402.196	402.234
	6	590227.990	402.167	402.184
	℄ BRG. E. ABUT.	590234.558	402.149	402.149
9	℄ PIER 27	590167.932	402.167	402.167
	1	590178.083	402.136	402.143
	2	590188.233	402.105	402.125
	3	590198.383	402.075	402.115
	4	590208.534	402.045	402.080
	5	590218.684	402.016	402.056
	6	590228.834	401.987	402.024
	℄ BRG. E. ABUT.	590235.409	401.968	401.968
10	℄ PIER 27	590168.710	401.987	401.987
	1	590178.871	401.956	401.982
	2	590189.033	401.926	401.948
	3	590199.195	401.894	401.934
	4	590209.357	401.864	401.909
	5	590219.518	401.835	401.873
	6	590229.680	401.805	401.823
	℄ BRG. E. ABUT.	590236.262	401.786	401.786
11	℄ PIER 27	590169.488	401.808	401.808
	1	590179.662	401.775	401.782
	2	590189.835	401.746	401.768
	3	590200.008	401.713	401.753
	4	590210.181	401.684	401.729
	5	590220.354	401.654	401.692
	6	590230.527	401.625	401.643
	℄ BRG. E. ABUT.	590237.117	401.607	401.607
12	℄ PIER 27	590170.270	401.625	401.625
	1	590180.454	401.594	401.603
	2	590190.639	401.563	401.588
	3	590200.823	401.533	401.561
	4	590211.008	401.503	401.549
	5	590221.192	401.474	401.529
	6	590231.375	401.446	401.470
	℄ BRG. E. ABUT.	590237.974	401.426	401.426

FOR INFORMATION ONLY

Note:
Elev. I - Theoretical Grade Elevations Top of Paving.
Elev. II - Theoretical Grade Elevations Top of Paving Adjusted for Dead Load (Concrete) Deflections.

Work this Sheet with Sheet No. 65

CONSOER, TOWNSEND & ASSOCIATES
CONSULTING ENGINEERS CHICAGO, ILLINOIS

ILLINOIS DIVISION OF HIGHWAYS
FAI ROUTE 64 BRIDGE OVER WABASH RIVER
F.A.I. 64 SECTION 97-3 B
WHITE COUNTY, ILLINOIS
POSEY COUNTY, INDIANA

DECK SLAB ELEVATIONS

DESIGNED	DRAWN	TRACED	CHECKED	REVIEWED	DATE	REVISED
I.A.A.	R.M.C.	R.M.C.	D.M.P.			

F.A.I. RTE. NO.	SECTION	COUNTY	TOTAL SHEETS	SHEET NO.
64	97-3B	White	103	70
FEDERAL ROAD DISTRICT NO.		ILLINOIS	FACE	

THEORETICAL AND ADJUSTED GRADE ELEVATIONS AT TOP OF PAVING - WEST BOUND

SPAN 24
WEST BOUND

BM. NO.	LINE NO.	STATION	ELEV. I	ELEV. II
1	℄ PIER 23	589850.006	403.449	403.449
	1	589868.927	403.419	403.420
	2	589878.849	403.389	403.424
	3	589888.770	403.358	403.417
	4	589898.691	403.330	403.394
	5	589908.612	403.304	403.356
	6	589918.532	403.273	403.296
	℄ PIER 24	589925.299	403.254	403.254
2	℄ PIER 23	589850.029	403.269	403.269
	1	589869.361	403.238	403.245
	2	589879.293	403.208	403.232
	3	589889.225	403.179	403.219
	4	589899.157	403.150	403.135
	5	589909.089	403.121	403.150
	6	589919.021	403.092	403.110
	℄ PIER 24	589925.795	403.074	403.074
3	℄ PIER 23	589850.053	403.088	403.088
	1	589869.796	403.058	403.065
	2	589879.739	403.028	403.052
	3	589889.682	402.998	403.038
	4	589899.625	402.969	403.014
	5	589909.568	402.940	402.978
	6	589919.510	402.912	402.929
	℄ PIER 24	589926.292	402.893	402.893
4	℄ PIER 23	589850.277	402.908	402.908
	1	589870.221	402.877	402.884
	2	589880.185	402.847	402.871
	3	589890.129	402.818	402.858
	4	589900.093	402.788	402.833
	5	589910.057	402.760	402.798
	6	589920.001	402.732	402.749
	℄ PIER 24	589926.791	402.713	402.713
5	℄ PIER 23	589850.703	402.727	402.727
	1	589870.668	402.697	402.704
	2	589880.633	402.667	402.691
	3	589890.598	402.637	402.677
	4	589900.563	402.608	402.653
	5	589910.528	402.579	402.617
	6	589920.493	402.551	402.568
	℄ PIER 24	589927.290	402.532	402.532
6	℄ PIER 23	589851.129	402.547	402.547
	1	589871.105	402.516	402.525
	2	589881.081	402.486	402.521
	3	589891.058	402.456	402.514
	4	589901.034	402.427	402.493
	5	589911.010	402.399	402.454
	6	589920.986	402.370	402.395
	℄ PIER 24	589927.780	402.351	402.351

SPAN 25
WEST BOUND

BM. NO.	LINE NO.	STATION	ELEV. I	ELEV. II
1	℄ PIER 24	589925.299	403.254	403.254
	1	589935.230	403.223	403.258
	2	589945.161	403.193	403.253
	3	589955.092	403.163	403.228
	4	589965.022	403.133	403.184
	℄ SPLICE	589975.026	403.104	403.130
	5	589983.351	403.077	403.084
	℄ PIER 25	589991.612	403.051	403.051
2	℄ PIER 24	589925.795	403.074	403.074
	1	589935.737	403.043	403.067
	2	589945.679	403.012	403.053
	3	589955.621	402.982	403.027
	4	589965.562	402.953	402.988
	℄ SPLICE	589975.577	402.923	402.941
	5	589983.911	402.897	402.902
	℄ PIER 25	589992.182	402.871	402.871
3	℄ PIER 24	589926.292	402.893	402.893
	1	589936.245	402.862	402.886
	2	589946.198	402.832	402.873
	3	589956.151	402.802	402.847
	4	589966.103	402.772	402.807
	℄ SPLICE	589976.129	402.743	402.761
	5	589984.472	402.716	402.721
	℄ PIER 25	589992.752	402.690	402.690
4	℄ PIER 24	589926.791	402.713	402.713
	1	589936.754	402.682	402.706
	2	589946.718	402.651	402.692
	3	589956.682	402.621	402.666
	4	589966.646	402.591	402.626
	℄ SPLICE	589976.682	402.562	402.580
	5	589985.035	402.535	402.540
	℄ PIER 25	589993.324	402.509	402.509
5	℄ PIER 24	589927.290	402.532	402.532
	1	589937.264	402.501	402.525
	2	589947.239	402.470	402.511
	3	589957.214	402.440	402.485
	4	589967.189	402.411	402.446
	℄ SPLICE	589977.237	402.381	402.399
	5	589985.599	402.355	402.360
	℄ PIER 25	589993.897	402.329	402.329
6	℄ PIER 24	589927.780	402.351	402.351
	1	589937.776	402.320	402.355
	2	589947.762	402.290	402.350
	3	589957.748	402.260	402.326
	4	589967.734	402.230	402.281
	℄ SPLICE	589977.792	402.201	402.227
	5	589986.184	402.174	402.181
	℄ PIER 25	589994.471	402.148	402.148

SPAN 26
WEST BOUND

BM. NO.	LINE NO.	STATION	ELEV. I	ELEV. II
1	℄ PIER 25	589991.612	403.051	403.051
	1	590001.553	403.020	403.027
	2	590011.494	402.990	403.021
	3	590021.435	402.960	403.014
	4	590031.376	402.930	402.994
	5	590041.317	402.901	402.960
	6	590051.258	402.873	402.911
	℄ SPLICE	590053.209	402.867	402.899
	7	590063.536	402.834	402.842
	℄ PIER 26	590073.755	402.802	402.802
2	℄ PIER 25	589992.182	402.871	402.871
	1	590002.133	402.840	402.845
	2	590012.085	402.808	402.839
	3	590022.037	402.779	402.816
	4	590031.989	402.750	402.794
	5	590041.941	402.721	402.761
	6	590051.893	402.692	402.718
	℄ SPLICE	590053.840	402.687	402.709
	7	590064.185	402.653	402.658
	℄ PIER 26	590074.416	402.621	402.621
3	℄ PIER 25	589992.752	402.690	402.690
	1	590002.715	402.659	402.664
	2	590012.678	402.629	402.650
	3	590022.641	402.599	402.636
	4	590032.604	402.569	402.613
	5	590042.567	402.540	402.580
	6	590052.530	402.511	402.537
	℄ SPLICE	590058.679	402.506	402.528
	7	590064.835	402.473	402.479
	℄ PIER 26	590075.077	402.441	402.441
4	℄ PIER 25	589993.324	402.509	402.509
	1	590003.298	402.478	402.483
	2	590013.272	402.448	402.469
	3	590023.246	402.418	402.456
	4	590033.220	402.388	402.432
	5	590043.194	402.359	402.399
	6	590053.168	402.331	402.357
	℄ SPLICE	590055.119	402.325	402.347
	7	590065.487	402.292	402.298
	℄ PIER 26	590075.740	402.260	402.260
5	℄ PIER 25	589993.897	402.329	402.329
	1	590003.882	402.298	402.303
	2	590013.847	402.267	402.288
	3	590023.832	402.237	402.274
	4	590033.817	402.208	402.252
	5	590043.822	402.179	402.219
	6	590053.807	402.150	402.176
	℄ SPLICE	590055.761	402.145	402.167
	7	590066.190	402.111	402.117
	℄ PIER 26	590076.405	402.079	402.079
6	℄ PIER 25	589994.471	402.148	402.148
	1	590004.467	402.117	402.124
	2	590014.464	402.087	402.118
	3	590024.460	402.057	402.111
	4	590034.456	402.027	402.091
	5	590044.452	401.998	402.057
	6	590054.448	401.969	402.007
	℄ SPLICE	590056.404	401.964	401.994
	7	590066.794	401.931	401.939
	℄ PIER 26	590077.071	401.898	401.898

SPAN 27
WEST BOUND

BM. NO.	LINE NO.	STATION	ELEV. I	ELEV. II
1	℄ PIER 26	590073.755	402.802	402.802
	1	590083.711	402.771	402.778
	2	590093.666	402.740	402.770
	3	590103.622	402.711	402.765
	4	590113.578	402.681	402.745
	5	590123.533	402.652	402.710
	6	590133.489	402.624	402.663
	℄ SPLICE	590135.341	402.618	402.651
	7	590145.698	402.585	402.593
	℄ PIER 27	590155.897	402.553	402.553
2	℄ PIER 26	590074.416	402.621	402.621
	1	590084.382	402.590	402.595
	2	590094.349	402.560	402.580
	3	590104.315	402.530	402.566
	4	590114.283	402.500	402.543
	5	590124.248	402.471	402.511
	6	590134.214	402.443	402.470
	℄ SPLICE	590136.069	402.438	402.440
	7	590146.438	402.404	402.410
	℄ PIER 27	590156.648	402.372	402.372
3	℄ PIER 26	590075.077	402.441	402.441
	1	590085.055	402.410	402.415
	2	590095.032	402.379	402.399
	3	590105.010	402.349	402.385
	4	590114.987	402.320	402.363
	5	590124.965	402.291	402.331
	6	590134.942	402.262	402.289
	℄ SPLICE	590136.799	402.257	402.279
	7	590147.179	402.224	402.230
	℄ PIER 27	590157.400	402.192	402.192
4	℄ PIER 26	590075.740	402.260	402.260
	1	590085.729	402.229	402.234
	2	590095.717	402.198	402.216
	3	590105.706	402.168	402.204
	4	590115.694	402.139	402.182
	5	590125.683	402.110	402.150
	6	590135.671	402.082	402.109
	℄ SPLICE	590137.530	402.076	402.088
	7	590147.921	402.043	402.049
	℄ PIER 27	590158.154	402.011	402.011
5	℄ PIER 26	590076.405	402.079	402.079
	1	590086.404	402.048	402.053
	2	590096.404	402.018	402.038
	3	590106.403	401.988	402.024
	4	590116.403	401.958	402.001
	5	590126.403	401.929	401.969
	6	590136.402	401.901	401.928
	℄ SPLICE	590139.263	401.896	401.918
	7	590148.665	401.862	401.868
	℄ PIER 27	590158.910	401.830	401.830
6	℄ PIER 26	590077.071	401.898	401.898
	1	590087.081	401.868	401.875
	2	590097.092	401.837	401.867
	3	590107.103	401.807	401.861
	4	590117.113	401.778	401.862
	5	590127.124	401.749	401.857
	6	590137.134	401.720	401.758
	℄ SPLICE	590138.997	401.715	401.748
	7	590149.411	401.682	401.690
	℄ PIER 27	590158.667	401.650	401.650

SPAN 28
WEST BOUND

BM. NO.	LINE NO.	STATION	ELEV. I	ELEV. II
1	℄ PIER 27	590155.897	402.553	402.553
	1	590165.849	402.532	402.531
	2	590175.801	402.482	402.527
	3	590185.813	402.442	402.520
	4	590195.785	402.432	402.488
	5	590205.756	402.408	402.458
	6	590215.728	402.375	402.400
	℄ BRG. E. ABUT.	590222.198	402.357	402.357
2	℄ PIER 27	590156.648	402.372	402.372
	1	590166.631	402.341	402.348
	2	590176.613	402.311	402.335
	3	590186.596	402.281	402.321
	4	590196.579	402.252	402.297
	5	590206.562	402.223	402.261
	6	590216.596	402.194	402.211
	℄ BRG. E. ABUT.	590223.016	402.176	402.176
3	℄ PIER 27	590157.400	402.192	402.192
	1	590167.396	402.161	402.168
	2	590177.388	402.130	402.154
	3	590187.382	402.104	402.141
	4	590197.376	402.071	402.116
	5	590207.369	402.042	402.080
	6	590217.363	402.014	402.031
	℄ BRG. E. ABUT.	590223.837	401.996	401.996
4	℄ PIER 27	590158.158	402.011	402.011
	1	590168.159	401.980	401.987
	2	590178.164	401.950	401.974
	3	590188.169	401.920	401.960
	4	590198.175	401.890	401.935
	5	590208.178	401.862	401.900
	6	590218.183	401.833	401.850
	℄ BRG. E. ABUT.	590224.664	401.815	401.815
5	℄ PIER 27	590158.910	401.830	401.830
	1	590168.926	401.799	401.806
	2	590178.942	401.769	401.793
	3	590188.958	401.739	401.779
	4	590198.974	401.710	401.755
	5	590208.989	401.681	401.719
	6	590219.005	401.653	401.670
	℄ BRG. E. ABUT.	590225.993	401.635	401.634
6	℄ PIER 27	590158.667	401.650	401.650
	1	590168.694	401.619	401.628
	2	590178.721	401.588	401.623
	3	590188.748	401.558	401.617
	4	590198.775	401.529	401.595
	5	590208.802	401.500	401.555
	6	590219.829	401.472	401.487
	℄ BRG. E. ABUT.	590226.324	401.454	401.454

FOR INFORMATION ONLY

Note :

Elev. I - Theoretical Grade Elevations Top of Paving.
Elev. II - Theoretical Grade Elevations Top of Paving Adjusted for Dead Load (Concrete) Deflections.

Work this Sheet with Sheet No. 65

CONSOER, TOWNSEND & ASSOCIATES
CONSULTING ENGINEERS CHICAGO, ILLINOIS

ILLINOIS DIVISION OF HIGHWAYS
FAI ROUTE 64 BRIDGE OVER WABASH RIVER
F.A.I. 64 SECTION 97-3B
WHITE COUNTY, ILLINOIS
POSEY COUNTY, INDIANA

DECK SLAB ELEVATIONS

DESIGNED	DRAWN	TRACED	CHECKED	SUPERVISED	DATE	REVISED
I.A.A.	R.MC.	R.MC.	D.M.P.			

F.A.I. RTE. NO.	SECTION	COUNTY	TOTAL SHEETS	SHEET NO.
64	97-3S	White	103	69
FEDERAL ROAD DISTRICT NO.		ILLINOIS	PROJ.	

THEORETICAL AND ADJUSTED ELEVATIONS AT TOP OF PAVING - EAST BOUND

SPAN 18 (℄ SPLICE TO ℄ PIER 18) & SPAN 19
EAST BOUND

SH. NO.	LINE NO.	STATION	ELEV. I	ELEV. II
7	℄ SPLICE	589450.250	404.272	404.402
	7	589469.625	404.223	404.280
	℄ PIER 18	589480.000	404.196	404.375
	1	589490.070	404.171	404.378
	2	589500.142	404.145	404.385
	3	589510.216	404.119	404.155
	4	589520.288	404.094	404.137
	5	589530.358	404.069	404.109
	6	589540.430	404.045	404.072
	℄ SPLICE	589542.715	404.040	404.062
	7	589553.166	404.020	404.014
	℄ PIER 19	589563.612	403.978	403.978
10	℄ SPLICE	589450.250	404.140	404.170
	7	589469.625	404.111	404.117
	℄ PIER 18	589480.000	404.075	404.075
	1	589490.085	404.040	404.045
	2	589500.168	404.005	404.025
	3	589510.252	403.970	404.006
	4	589520.335	403.936	403.979
	5	589530.418	403.902	403.942
	6	589540.502	403.869	403.896
	℄ SPLICE	589542.788	403.862	403.884
	7	589553.251	403.828	403.839
	℄ PIER 19	589563.708	403.796	403.796
11	℄ SPLICE	589450.250	404.016	404.036
	7	589469.625	403.972	403.978
	℄ PIER 18	589480.000	403.930	403.930
	1	589490.100	403.889	403.894
	2	589500.195	403.849	403.860
	3	589510.289	403.809	403.845
	4	589520.384	403.769	403.812
	5	589530.479	403.730	403.770
	6	589540.574	403.692	403.719
	℄ SPLICE	589542.862	403.683	403.705
	7	589553.337	403.648	403.654
	℄ PIER 19	589563.806	403.616	403.616
12	℄ SPLICE	589450.250	403.858	403.888
	7	589469.625	403.812	403.820
	℄ PIER 18	589480.000	403.767	403.767
	1	589490.115	403.723	403.730
	2	589500.221	403.680	403.710
	3	589510.327	403.638	403.692
	4	589520.434	403.596	403.660
	5	589530.540	403.554	403.612
	6	589540.646	403.512	403.582
	℄ SPLICE	589542.935	403.504	403.537
	7	589553.422	403.468	403.476
	℄ PIER 19	589563.903	403.436	403.436

SPAN 20
EAST BOUND

SH. NO.	LINE NO.	STATION	ELEV. I	ELEV. II
7	℄ PIER 19	589563.419	404.335	404.335
	1	589573.470	404.305	404.314
	2	589583.521	404.274	404.309
	3	589593.572	404.245	404.303
	4	589603.623	404.215	404.281
	5	589613.673	404.187	404.242
	6	589623.724	404.158	404.183
	℄ PIER 20	589630.794	404.139	404.139
8	℄ PIER 19	589563.515	404.156	404.156
	1	589573.578	404.125	404.132
	2	589583.640	404.094	404.118
	3	589593.702	404.065	404.105
	4	589603.766	404.035	404.080
	5	589613.826	404.007	404.045
	6	589623.888	403.978	403.995
	℄ PIER 20	589630.916	403.959	403.959
9	℄ PIER 19	589563.612	403.976	403.976
	1	589573.685	403.945	403.952
	2	589583.758	403.914	403.938
	3	589593.833	403.885	403.925
	4	589603.906	403.855	403.900
	5	589613.980	403.826	403.849
	6	589624.053	403.798	403.815
	℄ PIER 20	589631.069	403.779	403.779
10	℄ PIER 19	589563.709	403.796	403.796
	1	589573.794	403.765	403.772
	2	589583.879	403.734	403.758
	3	589593.964	403.705	403.745
	4	589604.048	403.675	403.720
	5	589614.133	403.646	403.684
	6	589624.218	403.618	403.635
	℄ PIER 20	589631.262	403.599	403.599
11	℄ PIER 19	589563.806	403.616	403.616
	1	589573.902	403.585	403.592
	2	589583.998	403.554	403.578
	3	589594.095	403.525	403.565
	4	589604.191	403.495	403.540
	5	589614.287	403.466	403.504
	6	589624.383	403.438	403.455
	℄ PIER 20	589631.435	403.418	403.418
12	℄ PIER 19	589563.903	403.436	403.436
	1	589574.011	403.405	403.416
	2	589584.119	403.375	403.410
	3	589594.228	403.345	403.403
	4	589604.336	403.315	403.381
	5	589614.442	403.286	403.361
	6	589624.549	403.258	403.283
	℄ PIER 20	589631.609	403.238	403.238

SPAN 21
EAST BOUND

SH. NO.	LINE NO.	STATION	ELEV. I	ELEV. II
7	℄ PIER 20	589630.794	404.139	404.139
	1	589640.798	404.106	404.143
	2	589650.852	404.077	404.137
	3	589660.906	404.047	404.115
	4	589670.959	404.017	404.088
	℄ SPLICE	589681.241	403.988	404.019
	5	589689.961	403.961	403.968
	℄ PIER 21	589690.076	403.935	403.935
8	℄ PIER 20	589630.916	403.958	403.958
	1	589640.981	403.928	403.952
	2	589651.046	403.897	403.938
	3	589661.112	403.867	403.912
	4	589671.177	403.837	403.872
	℄ SPLICE	589681.470	403.807	403.825
	5	589689.899	403.781	403.788
	℄ PIER 21	589690.324	403.754	403.754
9	℄ PIER 20	589631.089	403.779	403.779
	1	589641.165	403.747	403.771
	2	589651.242	403.717	403.758
	3	589661.318	403.687	403.732
	4	589671.395	403.657	403.692
	℄ SPLICE	589681.700	403.627	403.645
	5	589690.138	403.600	403.605
	℄ PIER 21	589690.572	403.574	403.574
10	℄ PIER 20	589631.262	403.589	403.589
	1	589641.350	403.557	403.581
	2	589651.437	403.537	403.578
	3	589661.525	403.506	403.551
	4	589671.613	403.477	403.512
	℄ SPLICE	589681.930	403.447	403.465
	5	589690.378	403.420	403.425
	℄ PIER 21	589690.821	403.394	403.394
11	℄ PIER 20	589631.435	403.418	403.418
	1	589641.534	403.387	403.411
	2	589651.634	403.356	403.397
	3	589661.733	403.326	403.371
	4	589671.832	403.297	403.332
	℄ SPLICE	589682.161	403.267	403.285
	5	589690.618	403.240	403.245
	℄ PIER 21	589691.071	403.214	403.214
12	℄ PIER 20	589631.609	403.238	403.238
	1	589641.720	403.207	403.242
	2	589651.830	403.176	403.236
	3	589661.941	403.146	403.212
	4	589672.052	403.116	403.167
	℄ SPLICE	589682.392	403.086	403.112
	5	589690.858	403.060	403.067
	℄ PIER 21	589691.321	403.033	403.033

SPAN 22
EAST BOUND

SH. NO.	LINE NO.	STATION	ELEV. I	ELEV. II
7	℄ PIER 21	589690.076	403.935	403.935
	1	589700.139	403.904	403.911
	2	589710.182	403.873	403.909
	3	589720.250	403.843	403.897
	4	589730.308	403.814	403.878
	5	589740.366	403.785	403.844
	6	589750.424	403.756	403.794
	℄ SPLICE	589760.426	403.750	403.782
	7	589771.063	403.717	403.715
	℄ PIER 22	589781.485	403.684	403.684
8	℄ PIER 21	589690.324	403.754	403.754
	1	589700.393	403.723	403.726
	2	589710.463	403.693	403.714
	3	589720.532	403.663	403.700
	4	589730.601	403.633	403.677
	5	589740.670	403.604	403.644
	6	589750.740	403.574	403.602
	℄ SPLICE	589760.944	403.569	403.581
	7	589771.394	403.536	403.542
	℄ PIER 22	589781.827	403.503	403.503
9	℄ PIER 21	589690.572	403.574	403.574
	1	589700.653	403.543	403.548
	2	589710.734	403.513	403.534
	3	589720.814	403.482	403.519
	4	589730.895	403.452	403.487
	5	589740.976	403.424	403.444
	6	589750.056	403.395	403.421
	℄ SPLICE	589761.263	403.389	403.411
	7	589771.726	403.356	403.362
	℄ PIER 22	589782.170	403.323	403.323
10	℄ PIER 21	589690.821	403.394	403.394
	1	589700.913	403.363	403.368
	2	589711.006	403.332	403.353
	3	589721.098	403.302	403.339
	4	589731.190	403.273	403.317
	5	589741.282	403.243	403.283
	6	589751.374	403.215	403.241
	℄ SPLICE	589761.583	403.209	403.231
	7	589772.056	403.175	403.181
	℄ PIER 22	589782.513	403.142	403.142
11	℄ PIER 21	589691.071	403.214	403.214
	1	589701.174	403.182	403.187
	2	589711.278	403.152	403.173
	3	589721.382	403.122	403.150
	4	589731.485	403.092	403.136
	5	589741.588	403.063	403.103
	6	589751.692	403.036	403.060
	℄ SPLICE	589761.904	403.028	403.050
	7	589772.388	402.995	403.001
	℄ PIER 22	589782.857	402.962	402.962
12	℄ PIER 21	589691.321	403.033	403.033
	1	589701.435	403.002	403.009
	2	589711.551	402.972	403.003
	3	589721.666	402.941	402.995
	4	589731.781	402.912	402.976
	5	589741.896	402.883	402.942
	6	589752.010	402.854	402.892
	℄ SPLICE	589762.225	402.848	402.880
	7	589772.722	402.818	402.822
	℄ PIER 22	589782.202	402.781	402.781

SPAN 23
EAST BOUND

SH. NO.	LINE NO.	STATION	ELEV. I	ELEV. II
7	℄ PIER 22	589781.485	403.684	403.684
	1	589791.554	403.653	403.660
	2	589801.617	403.622	403.652
	3	589811.682	403.592	403.646
	4	589821.746	403.562	403.626
	5	589831.814	403.533	403.581
	6	589841.879	403.504	403.543
	℄ SPLICE	589844.035	403.498	403.531
	7	589854.480	403.465	403.473
	℄ PIER 23	589864.898	403.432	403.432
8	℄ PIER 22	589781.827	403.503	403.503
	1	589791.901	403.472	403.477
	2	589801.961	403.441	403.461
	3	589812.058	403.411	403.447
	4	589822.155	403.381	403.424
	5	589832.212	403.352	403.382
	6	589842.289	403.324	403.351
	℄ SPLICE	589844.947	403.317	403.339
	7	589854.904	403.284	403.290
	℄ PIER 23	589865.333	403.252	403.252
9	℄ PIER 22	589782.170	403.323	403.323
	1	589792.250	403.292	403.297
	2	589802.346	403.261	403.281
	3	589812.425	403.231	403.267
	4	589822.523	403.201	403.246
	5	589832.612	403.172	403.212
	6	589842.700	403.143	403.170
	℄ SPLICE	589844.861	403.137	403.159
	7	589855.329	403.106	403.110
	℄ PIER 23	589865.770	403.071	403.071
10	℄ PIER 22	589782.513	403.142	403.142
	1	589792.613	403.111	403.146
	2	589802.713	403.080	403.100
	3	589812.812	403.050	403.086
	4	589822.912	403.020	403.063
	5	589833.012	402.991	403.031
	6	589843.111	402.962	402.989
	℄ SPLICE	589845.275	402.956	402.978
	7	589855.755	402.923	402.929
	℄ PIER 23	589866.208	402.890	402.890
11	℄ PIER 22	589782.857	402.962	402.962
	1	589792.948	402.931	402.936
	2	589803.080	402.900	402.920
	3	589813.191	402.870	402.906
	4	589823.302	402.840	402.883
	5	589833.413	402.811	402.851
	6	589843.524	402.782	402.809
	℄ SPLICE	589845.690	402.776	402.798
	7	589856.182	402.743	402.749
	℄ PIER 23	589866.646	402.710	402.710
12	℄ PIER 22	589783.202	402.781	402.781
	1	589793.325	402.750	402.757
	2	589803.447	402.719	402.749
	3	589813.570	402.689	402.743
	4	589823.693	402.658	402.723
	5	589833.815	402.630	402.686
	6	589843.938	402.601	402.640
	℄ SPLICE	589846.106	402.595	402.628
	7	589856.610	402.562	402.570
	℄ PIER 23	589867.086	402.529	402.529

FOR INFORMATION ONLY

Work this Sheet with Sheet No. 65

Note:
Elev. I - Theoretical Grade Elevations Top of Paving.
Elev. II - Theoretical Grade Elevations Top of Paving Adjusted for Dead Load (Concrete) Deflections.

CONSOER, TOWNSEND & ASSOCIATES
CONSULTING ENGINEERS CHICAGO, ILLINOIS

ILLINOIS DIVISION OF HIGHWAYS
FAI ROUTE 64 BRIDGE OVER WABASH RIVER
FAI 64 SECTION 97-3B
WHITE COUNTY, ILLINOIS
POSEY COUNTY, INDIANA

DECK SLAB ELEVATIONS

DESIGNED	DRAWN	TRACED	CHECKED	SUPERVISED	DATE	REVISED
I.A.A.	R.MC.	R.MC.	D.M.P.			

THEORETICAL AND ADJUSTED GRADE ELEVATIONS AT TOP OF PAVING - WEST BOUND

F.A.I. RTE. NO.	SECTION	COUNTY	TOTAL SHEETS	SHEET NO.
64	97-3B	White	103	68

SPAN 18 (℄ SPLICE TO ℄ PIER 18) & SPAN 19
WEST BOUND

BM. NO.	LINE NO.	STATION	ELEV. I	ELEV. II
1	℄ SPLICE	589450.250	404.370	404.402
	7	589460.625	404.373	404.381
	℄ PIER 18	589470.000	404.375	404.375
	1	589480.887	404.378	404.385
	2	589490.784	404.380	404.410
	3	589500.680	404.383	404.437
	4	589510.577	404.386	404.450
	5	589520.473	404.390	404.440
	6	589530.369	404.394	404.433
	℄ SPLICE	589541.265	404.395	404.420
	7	589551.854	404.373	404.381
	℄ PIER 19	589562.118	404.341	404.341
2	℄ SPLICE	589450.250	404.322	404.344
	7	589460.625	404.308	404.315
	℄ PIER 18	589470.000	404.295	404.295
	1	589480.902	404.283	404.288
	2	589490.809	404.270	404.290
	3	589500.717	404.257	404.293
	4	589510.624	404.245	404.288
	5	589520.532	404.234	404.274
	6	589530.439	404.223	404.250
	℄ SPLICE	589541.656	404.220	404.242
	7	589551.936	404.194	404.200
	℄ PIER 19	589562.211	404.162	404.162
3	℄ SPLICE	589450.250	404.250	404.272
	7	589460.625	404.229	404.230
	℄ PIER 18	589470.000	404.197	404.197
	1	589480.916	404.171	404.176
	2	589490.835	404.146	404.166
	3	589500.753	404.121	404.157
	4	589510.672	404.097	404.140
	5	589520.590	404.073	404.113
	6	589530.508	404.050	404.077
	℄ SPLICE	589541.727	404.046	404.067
	7	589552.019	404.014	404.020
	℄ PIER 19	589562.305	403.982	403.982
4	℄ SPLICE	589450.250	404.148	404.170
	7	589460.625	404.112	404.118
	℄ PIER 18	589470.000	404.075	404.075
	1	589480.931	404.041	404.046
	2	589490.860	404.007	404.027
	3	589500.790	403.973	404.009
	4	589510.720	403.940	403.983
	5	589520.649	403.907	403.947
	6	589530.578	403.875	403.902
	℄ SPLICE	589541.798	403.868	403.890
	7	589552.101	403.834	403.840
	℄ PIER 19	589562.399	403.802	403.802
5	℄ SPLICE	589450.250	404.014	404.036
	7	589460.625	403.972	403.978
	℄ PIER 18	589470.000	403.931	403.931
	1	589480.946	403.890	403.895
	2	589490.886	403.851	403.871
	3	589500.827	403.812	403.848
	4	589510.767	403.773	403.816
	5	589520.708	403.735	403.775
	6	589530.648	403.698	403.725
	℄ SPLICE	589541.868	403.689	403.711
	7	589552.184	403.654	403.660
	℄ PIER 19	589562.493	403.622	403.622
6	℄ SPLICE	589450.250	403.866	403.888
	7	589460.625	403.812	403.820
	℄ PIER 18	589470.000	403.767	403.767
	1	589480.960	403.725	403.732
	2	589490.912	403.683	403.713
	3	589500.864	403.641	403.695
	4	589510.815	403.600	403.664
	5	589520.767	403.560	403.617
	6	589530.718	403.519	403.558
	℄ SPLICE	589541.940	403.510	403.540
	7	589552.266	403.474	403.482
	℄ PIER 19	589562.587	403.442	403.442

SPAN 20
WEST BOUND

BM. NO.	LINE NO.	STATION	ELEV. I	ELEV. II
1	℄ PIER 19	589562.118	404.341	404.341
	1	589572.016	404.311	404.320
	2	589581.914	404.281	404.316
	3	589591.812	404.252	404.310
	4	589601.710	404.223	404.289
	5	589611.608	404.194	404.240
	6	589621.505	404.167	404.192
	℄ PIER 20	589628.419	404.147	404.147
2	℄ PIER 19	589562.211	404.162	404.162
	1	589572.120	404.131	404.138
	2	589582.029	404.101	404.125
	3	589591.938	404.072	404.112
	4	589601.847	404.043	404.088
	5	589611.756	404.014	404.052
	6	589621.665	403.986	404.003
	℄ PIER 20	589628.586	403.967	403.967
3	℄ PIER 19	589562.305	403.982	403.982
	1	589572.225	403.951	403.958
	2	589582.145	403.921	403.945
	3	589592.065	403.892	403.932
	4	589601.985	403.863	403.908
	5	589611.905	403.834	403.872
	6	589621.824	403.806	403.823
	℄ PIER 20	589628.753	403.787	403.787
4	℄ PIER 19	589562.399	403.802	403.802
	1	589572.330	403.771	403.778
	2	589582.261	403.741	403.765
	3	589592.192	403.712	403.752
	4	589602.123	403.683	403.728
	5	589612.054	403.654	403.692
	6	589621.984	403.626	403.643
	℄ PIER 20	589628.921	403.607	403.607
5	℄ PIER 19	589562.493	403.622	403.622
	1	589572.435	403.591	403.598
	2	589582.377	403.561	403.585
	3	589592.319	403.532	403.572
	4	589602.261	403.503	403.548
	5	589612.203	403.474	403.512
	6	589622.146	403.446	403.463
	℄ PIER 20	589629.089	403.427	403.427
6	℄ PIER 19	589562.587	403.442	403.442
	1	589572.540	403.411	403.420
	2	589582.493	403.381	403.416
	3	589592.447	403.352	403.410
	4	589602.400	403.323	403.389
	5	589612.353	403.294	403.340
	6	589622.306	403.266	403.291
	℄ PIER 20	589629.258	403.247	403.247

SPAN 21
WEST BOUND

BM. NO.	LINE NO.	STATION	ELEV. I	ELEV. II
1	℄ PIER 20	589628.419	404.147	404.147
	1	589638.320	404.117	404.152
	2	589648.221	404.086	404.148
	3	589658.122	404.056	404.122
	4	589668.023	404.027	404.078
	℄ SPLICE	589678.198	403.998	404.029
	5	589686.443	403.971	403.978
	℄ PIER 21	589694.726	403.945	403.945
2	℄ PIER 20	589628.586	403.967	403.967
	1	589638.498	403.936	403.980
	2	589648.410	403.906	403.967
	3	589658.322	403.876	403.921
	4	589668.234	403.847	403.882
	℄ SPLICE	589678.371	403.817	403.835
	5	589686.675	403.791	403.798
	℄ PIER 21	589694.967	403.765	403.765
3	℄ PIER 20	589628.753	403.787	403.787
	1	589638.676	403.756	403.780
	2	589648.599	403.726	403.767
	3	589658.522	403.696	403.741
	4	589668.446	403.667	403.702
	℄ SPLICE	589678.593	403.637	403.655
	5	589686.907	403.611	403.616
	℄ PIER 21	589695.208	403.585	403.585
4	℄ PIER 20	589628.921	403.607	403.607
	1	589638.855	403.576	403.600
	2	589648.789	403.546	403.587
	3	589658.723	403.516	403.561
	4	589668.657	403.487	403.522
	℄ SPLICE	589678.816	403.457	403.475
	5	589687.130	403.431	403.436
	℄ PIER 21	589695.450	403.404	403.404
5	℄ PIER 20	589629.089	403.427	403.427
	1	589639.034	403.396	403.420
	2	589648.979	403.366	403.407
	3	589658.924	403.336	403.381
	4	589668.869	403.306	403.341
	℄ SPLICE	589679.040	403.277	403.295
	5	589687.372	403.250	403.256
	℄ PIER 21	589695.692	403.224	403.224
6	℄ PIER 20	589629.258	403.247	403.247
	1	589639.214	403.216	403.251
	2	589649.170	403.185	403.245
	3	589659.126	403.156	403.222
	4	589669.082	403.126	403.177
	℄ SPLICE	589679.264	403.087	403.123
	5	589687.605	403.070	403.077
	℄ PIER 21	589695.934	403.044	403.044

SPAN 22
WEST BOUND

BM. NO.	LINE NO.	STATION	ELEV. I	ELEV. II
1	℄ PIER 21	589694.726	403.945	403.945
	1	589704.632	403.915	403.922
	2	589714.537	403.884	403.915
	3	589724.442	403.855	403.909
	4	589734.347	403.825	403.889
	5	589744.252	403.797	403.856
	6	589754.157	403.768	403.806
	℄ SPLICE	589756.326	403.762	403.794
	7	589766.614	403.729	403.737
	℄ PIER 22	589776.856	403.697	403.697
2	℄ PIER 21	589694.967	403.765	403.765
	1	589704.868	403.734	403.739
	2	589714.790	403.704	403.725
	3	589724.715	403.674	403.711
	4	589734.632	403.645	403.689
	5	589744.548	403.616	403.656
	6	589754.464	403.588	403.614
	℄ SPLICE	589756.635	403.582	403.604
	7	589766.935	403.549	403.555
	℄ PIER 22	589777.186	403.517	403.517
3	℄ PIER 21	589695.208	403.585	403.585
	1	589705.135	403.554	403.580
	2	589715.062	403.524	403.545
	3	589724.990	403.494	403.531
	4	589734.917	403.465	403.509
	5	589744.844	403.436	403.476
	6	589754.771	403.408	403.434
	℄ SPLICE	589756.944	403.401	403.423
	7	589767.256	403.369	403.375
	℄ PIER 22	589777.522	403.336	403.336
4	℄ PIER 21	589695.450	403.404	403.404
	1	589705.388	403.374	403.379
	2	589715.326	403.343	403.364
	3	589725.264	403.314	403.351
	4	589735.202	403.284	403.328
	5	589745.141	403.255	403.295
	6	589755.079	403.227	403.253
	℄ SPLICE	589757.255	403.221	403.243
	7	589767.577	403.188	403.194
	℄ PIER 22	589777.856	403.156	403.156
5	℄ PIER 21	589695.692	403.224	403.224
	1	589705.641	403.193	403.198
	2	589715.590	403.163	403.184
	3	589725.540	403.133	403.170
	4	589735.489	403.104	403.148
	5	589745.438	403.075	403.115
	6	589755.387	403.047	403.073
	℄ SPLICE	589757.566	403.041	403.063
	7	589767.900	403.008	403.014
	℄ PIER 22	589778.191	402.975	402.975
6	℄ PIER 21	589695.934	403.044	403.044
	1	589705.895	403.013	403.020
	2	589715.856	402.983	403.014
	3	589725.815	402.953	403.007
	4	589735.776	402.924	402.988
	5	589745.736	402.895	402.954
	6	589755.696	402.866	402.904
	℄ SPLICE	589757.877	402.860	402.892
	7	589768.223	402.827	402.835
	℄ PIER 22	589778.527	402.795	402.795

SPAN 23
WEST BOUND

BM. NO.	LINE NO.	STATION	ELEV. I	ELEV. II
1	℄ PIER 22	589776.856	403.697	403.697
	1	589786.766	403.666	403.672
	2	589796.706	403.636	403.666
	3	589806.602	403.607	403.661
	4	589816.506	403.577	403.661
	5	589826.417	403.549	403.607
	6	589836.329	403.520	403.558
	℄ SPLICE	589838.452	403.514	403.547
	7	589848.767	403.482	403.488
	℄ PIER 23	589858.006	403.449	403.449
2	℄ PIER 22	589777.186	403.517	403.517
	1	589786.111	403.486	403.491
	2	589797.035	403.456	403.476
	3	589806.958	403.426	403.462
	4	589816.881	403.397	403.440
	5	589826.805	403.368	403.408
	6	589836.728	403.340	403.367
	℄ SPLICE	589838.853	403.334	403.356
	7	589849.178	403.301	403.307
	℄ PIER 23	589858.429	403.269	403.269
3	℄ PIER 22	589777.522	403.336	403.336
	1	589787.456	403.306	403.311
	2	589797.380	403.275	403.295
	3	589807.325	403.246	403.282
	4	589817.258	403.216	403.259
	5	589827.193	403.188	403.228
	6	589837.127	403.159	403.186
	℄ SPLICE	589839.255	403.153	403.175
	7	589849.588	403.121	403.127
	℄ PIER 23	589858.853	403.088	403.088
4	℄ PIER 22	589777.856	403.156	403.156
	1	589787.801	403.125	403.130
	2	589797.747	403.095	403.115
	3	589807.692	403.065	403.101
	4	589817.637	403.036	403.079
	5	589827.583	403.007	403.047
	6	589837.528	402.979	403.006
	℄ SPLICE	589839.658	402.973	402.995
	7	589850.003	402.940	402.946
	℄ PIER 23	589860.277	402.908	402.908
5	℄ PIER 22	589778.191	402.975	402.975
	1	589788.148	402.945	402.950
	2	589798.104	402.914	402.936
	3	589808.060	402.885	402.921
	4	589818.017	402.855	402.898
	5	589827.973	402.827	402.867
	6	589837.929	402.798	402.825
	℄ SPLICE	589840.062	402.792	402.814
	7	589850.417	402.760	402.766
	℄ PIER 23	589860.702	402.727	402.727
6	℄ PIER 22	589778.527	402.795	402.795
	1	589788.494	402.764	402.771
	2	589798.462	402.734	402.764
	3	589808.429	402.704	402.758
	4	589818.397	402.675	402.738
	5	589828.364	402.646	402.704
	6	589838.331	402.618	402.657
	℄ SPLICE	589840.466	402.612	402.665
	7	589850.832	402.579	402.587
	℄ PIER 23	589861.128	402.547	402.547

Note:
Elev. I - Theoretical Grade Elevations Top of Paving.
Elev. II - Theoretical Grade Elevations Top of Paving Adjusted for Dead Load (Concrete) Deflections.

Work this Sheet with Sheet No. 65

CONSOER, TOWNSEND & ASSOCIATES
CONSULTING ENGINEERS CHICAGO, ILLINOIS

ILLINOIS DIVISION OF HIGHWAYS
FAI ROUTE 64 BRIDGE OVER WABASH RIVER
FAL 64 SECTION 97-3 B
WHITE COUNTY, ILLINOIS
POSEY COUNTY, INDIANA

DECK SLAB ELEVATIONS

DESIGNED	DRAWN	TRACED	CHECKED	APPROVED	DATE	REVISED
I.A.A.	R.MC.	R.MC.	D.M.P.			

FOR INFORMATION ONLY

F.A.I. RTE. NO.	SECTION	COUNTY	TOTAL SHEETS	SHEET NO.
64	97-3B	White	103	67
FEDERAL ROAD DISTRICT NO.		ILLINOIS	FED. AID PROJECT NO.	

THEORETICAL AND ADJUSTED GRADE ELEVATIONS AT TOP OF PAVING

SPANS 13 & 14
EAST BOUND & WEST BOUND

SPAN NO.	LINE NO.	INL. NO.	STATION	ELEV. I	ELEV. II
13	℄ PIER 12	1	589030.000	405.281	405.281
		2		405.410	405.410
		3		405.482	405.482
	1	1	589040.000	405.254	405.286
		2		405.380	405.404
		3		405.452	405.476
	2	1	589050.000	405.221	405.281
		2		405.350	405.381
		3		405.422	405.463
	3	1	589060.000	405.191	405.257
		2		405.320	405.365
		3		405.392	405.437
	4	1	589070.000	405.161	405.212
		2		405.290	405.325
		3		405.362	405.387
	℄ SPLICE	1	589080.250	405.131	405.157
		2		405.258	405.277
		3		405.331	405.348
	5	1	589088.625	405.106	405.113
		2		405.234	405.239
		3		405.306	405.311
	℄ PIER 13	1	589097.000	405.080	405.080
		2		405.209	405.209
		3		405.281	405.281
14	1	1	589107.000	405.050	405.057
		2		405.179	405.184
		3		405.251	405.256
	2	1	589117.000	405.020	405.051
		2		405.140	405.170
		3		405.221	405.242
	3	1	589127.000	404.990	405.044
		2		405.119	405.156
		3		405.191	405.228
	4	1	589137.000	404.960	405.024
		2		405.089	405.133
		3		405.161	405.205
	5	1	589147.000	404.930	404.989
		2		405.059	405.089
		3		405.131	405.171
	6	1	589157.000	404.898	404.938
		2		405.029	405.066
		3		405.101	405.127
	℄ SPLICE	1	589158.250	404.894	404.926
		2		405.022	405.044
		3		405.094	405.116
	7	1	589169.625	404.863	404.871
		2		404.991	404.987
		3		405.063	405.069
	℄ PIER 14	1	589180.000	404.831	404.831
		2		404.960	404.960
		3		405.032	405.032

SPANS 15 & 16
EAST BOUND & WEST BOUND

SPAN NO.	LINE NO.	INL. NO.	STATION	ELEV. I	ELEV. II
15	℄ PIER 14	1	589180.000	404.831	404.831
		2		404.960	404.960
		3		405.032	405.032
	1	1	589190.000	404.801	404.908
		2		404.920	404.935
		3		405.002	405.007
	2	1	589200.000	404.771	404.881
		2		404.900	404.920
		3		404.972	404.982
	3	1	589210.000	404.741	404.795
		2		404.870	404.904
		3		404.942	404.978
	4	1	589220.000	404.711	404.775
		2		404.840	404.883
		3		404.912	404.955
	5	1	589230.000	404.681	404.730
		2		404.810	404.850
		3		404.882	404.922
	6	1	589240.000	404.651	404.690
		2		404.780	404.807
		3		404.852	404.879
	℄ SPLICE	1	589242.250	404.645	404.678
		2		404.773	404.795
		3		404.845	404.867
	7	1	589252.625	404.614	404.622
		2		404.742	404.748
		3		404.814	404.820
	℄ PIER 15	1	589263.000	404.582	404.582
		2		404.711	404.711
		3		404.783	404.783
16	1	1	589273.000	404.552	404.561
		2		404.681	404.688
		3		404.753	404.760
	2	1	589283.000	404.522	404.557
		2		404.651	404.675
		3		404.723	404.747
	3	1	589293.000	404.482	404.550
		2		404.621	404.661
		3		404.693	404.733
	4	1	589303.000	404.442	404.538
		2		404.591	404.636
		3		404.663	404.708
	5	1	589313.000	404.432	404.487
		2		404.561	404.589
		3		404.633	404.671
	6	1	589323.000	404.402	404.427
		2		404.531	404.548
		3		404.603	404.620
	℄ PIER 16	1	589330.000	404.381	404.381
		2		404.510	404.510
		3		404.582	404.582

SPAN 17
EAST BOUND & WEST BOUND

BEAM NO.	LINE NO.	STATION	ELEV. I	ELEV. II
1 & 7	℄ PIER 16	589330.000	404.381	404.381
	1	589340.000	404.354	404.386
	2	589350.000	404.328	404.390
	3	589360.000	404.341	404.407
	4	589370.000	404.394	404.395
	℄ SPLICE	589380.250	404.347	404.373
	5	589388.625	404.348	404.356
	℄ PIER 17	589397.000	404.352	404.352
2 & 8	℄ PIER 16	589330.000	404.510	404.510
	1	589340.000	404.488	404.509
	2	589350.000	404.488	404.500
	3	589360.000	404.467	404.482
	4	589370.000	404.434	404.469
	℄ SPLICE	589380.250	404.421	404.439
	5	589388.625	404.411	404.416
	℄ PIER 17	589397.000	404.400	404.400
3 & 9	℄ PIER 16	589330.000	404.582	404.582
	1	589340.000	404.552	404.576
	2	589350.000	404.524	404.565
	3	589360.000	404.488	404.548
	4	589370.000	404.475	404.509
	℄ SPLICE	589380.250	404.448	404.486
	5	589388.625	404.427	404.432
	℄ PIER 17	589397.000	404.406	404.406
4 & 10	℄ PIER 16	589330.000	404.582	404.582
	1	589340.000	404.552	404.576
	2	589350.000	404.520	404.561
	3	589360.000	404.485	404.530
	4	589370.000	404.461	404.486
	℄ SPLICE	589380.250	404.417	404.435
	5	589388.625	404.388	404.393
	℄ PIER 17	589397.000	404.360	404.360
5 & 11	℄ PIER 16	589330.000	404.510	404.510
	1	589340.000	404.488	404.504
	2	589350.000	404.445	404.466
	3	589360.000	404.406	404.451
	4	589370.000	404.388	404.401
	℄ SPLICE	589380.250	404.326	404.344
	5	589388.625	404.293	404.296
	℄ PIER 17	589397.000	404.260	404.260
6 & 12	℄ PIER 16	589330.000	404.381	404.381
	1	589340.000	404.354	404.386
	2	589350.000	404.315	404.375
	3	589360.000	404.273	404.330
	4	589370.000	404.231	404.282
	℄ SPLICE	589380.250	404.188	404.214
	5	589388.625	404.153	404.160
	℄ PIER 17	589397.000	404.118	404.118

SPAN 18 (℄ PIER 17 TO ℄ SPLICE)
EAST BOUND & WEST BOUND

BEAM NO.	LINE NO.	STATION	ELEV. I	ELEV. II
1 & 7	℄ PIER 17	589397.000	404.352	404.352
	1	589407.000	404.355	404.362
	2	589417.000	404.358	404.383
	3	589427.000	404.364	404.415
	4	589437.000	404.363	404.427
	5	589447.000	404.365	404.425
	6	589457.000	404.363	404.407
	℄ SPLICE	589458.250	404.370	404.402
2 & 8	℄ PIER 17	589397.000	404.400	404.400
	1	589407.000	404.380	404.383
	2	589417.000	404.375	404.398
	3	589427.000	404.383	404.400
	4	589437.000	404.380	404.394
	5	589447.000	404.338	404.370
	6	589457.000	404.325	404.364
	℄ SPLICE	589458.250	404.322	404.344
3 & 9	℄ PIER 17	589397.000	404.406	404.406
	1	589407.000	404.381	404.386
	2	589417.000	404.356	404.377
	3	589427.000	404.331	404.368
	4	589437.000	404.308	404.350
	5	589447.000	404.281	404.321
	6	589457.000	404.258	404.282
	℄ SPLICE	589458.250	404.230	404.272
4 & 10	℄ PIER 17	589397.000	404.360	404.360
	1	589407.000	404.325	404.330
	2	589417.000	404.291	404.312
	3	589427.000	404.257	404.294
	4	589437.000	404.223	404.267
	5	589447.000	404.189	404.229
	6	589457.000	404.155	404.181
	℄ SPLICE	589458.250	404.146	404.170
5 & 11	℄ PIER 17	589397.000	404.260	404.260
	1	589407.000	404.228	404.225
	2	589417.000	404.201	404.202
	3	589427.000	404.161	404.178
	4	589437.000	404.102	404.146
	5	589447.000	404.063	404.103
	6	589457.000	404.022	404.049
	℄ SPLICE	589458.250	404.014	404.036
6 & 12	℄ PIER 17	589397.000	404.118	404.118
	1	589407.000	404.076	404.063
	2	589417.000	404.034	404.065
	3	589427.000	403.982	404.046
	4	589437.000	403.958	404.014
	5	589447.000	403.928	403.967
	6	589457.000	403.888	403.904
	℄ SPLICE	589458.250	403.856	403.880

FOR INFORMATION ONLY

Note:
Elev. I - Theoretical Grade Elevations Top of Paving.
Elev. II - Theoretical Grade Elevations Top of Paving Adjusted for Dead Load (Concrete) Deflections.

Work this sheet with Sheet 65

CONSOER, TOWNSEND & ASSOCIATES
CONSULTING ENGINEERS CHICAGO, ILLINOIS

ILLINOIS DIVISION OF HIGHWAYS
FAI ROUTE 64 BRIDGE OVER WABASH RIVER
FAI. 64 SECTION 97-3 B
WHITE COUNTY, ILLINOIS
POSEY COUNTY, INDIANA

DECK SLAB ELEVATIONS

DESIGNED	DRAWN	TRACED	CHECKED	REVISED	DATE	REVISED
I.A.A.	I.A.A.	A.S.	D.M.P.			

F.A.I. RTE. NO.	SECTION	COUNTY	TOTAL SHEETS	SHEET NO.
64	97-3B	White	103	66
FEDERAL ROAD DISTRICT NO.		ILLINOIS	PROJ.	

THEORETICAL AND ADJUSTED GRADE ELEVATIONS AT TOP OF PAVING

SPANS 1, 2, 3 & 4
EAST BOUND & WEST BOUND

SPAN NO.	LINE NO.	STATION	ELEV. I	ELEV. II
1	℄ BRG. W. ABUT.	587530.00	409.904	409.904
	1	587540.00	409.874	409.907
	2	587550.00	409.844	409.905
	3	587560.00	409.814	409.895
	4	587570.00	409.784	409.874
	5	587580.00	409.754	409.846
	6	587590.00	409.724	409.807
	7	587600.00	409.694	409.760
	℄ SPLICE	587605.00	409.679	409.735
	8	587610.00	409.664	409.709
	9	587620.00	409.634	409.657
	10	587630.00	409.604	409.613
	11	587640.00	409.574	409.574
	℄ PIER 1	587650.00	409.544	409.544
2	1	587660.00	409.514	409.523
	2	587670.00	409.484	409.509
	3	587680.00	409.454	409.502
	4	587690.00	409.424	409.500
	℄ SPLICE	587695.00	409.409	409.499
	5	587700.00	409.394	409.497
	6	587710.00	409.364	409.490
	7	587720.00	409.334	409.476
	8	587730.00	409.304	409.452
	9	587740.00	409.274	409.417
	10	587750.00	409.244	409.375
	11	587760.00	409.214	409.324
	℄ SPLICE	587765.00	409.199	409.296
	12	587770.00	409.184	409.267
	13	587780.00	409.154	409.209
	14	587790.00	409.124	409.154
	15	587800.00	409.094	409.108
	℄ PIER 2	587810.00	409.064	409.064
3	1	587820.00	409.034	409.029
	2	587830.00	409.004	409.004
	3	587840.00	408.974	408.985
	4	587850.00	408.944	408.971
	℄ SPLICE	587855.00	408.929	408.966
	5	587860.00	408.914	408.959
	6	587870.00	408.884	408.942
	7	587880.00	408.854	408.919
	8	587890.00	408.824	408.888
	9	587900.00	408.794	408.848
	10	587910.00	408.764	408.802
	11	587920.00	408.734	408.753
	℄ SPLICE	587925.00	408.719	408.728
	12	587930.00	408.704	408.704
	13	587940.00	408.674	408.643
	14	587950.00	408.644	408.626
	15	587960.00	408.614	408.604
	℄ PIER 3	587970.00	408.584	408.584
4	1	587980.00	408.554	408.574
	2	587990.00	408.524	408.573
	3	588000.00	408.494	408.579
	4	588010.00	408.464	408.581
	℄ SPLICE	588015.00	408.449	408.598
	5	588020.00	408.434	408.604
	6	588030.00	408.404	408.606
	7	588040.00	408.374	408.604
	8	588050.00	408.344	408.593
	9	588060.00	408.314	408.570
	10	588070.00	408.284	408.534
	11	588080.00	408.254	408.487
	12	588090.00	408.224	408.428
	13	588100.00	408.194	408.361
	14	588110.00	408.164	408.284
	15	588120.00	408.134	408.194
	℄ PIER 4	588130.00	408.104	408.104

SPANS 5, 6, 7 & 8
EAST BOUND & WEST BOUND

SPAN NO.	LINE NO.	STATION	ELEV. I	ELEV. II
5	℄ PIER 4	588130.00	408.104	408.104
	1	588140.00	408.074	408.134
	2	588150.00	408.044	408.161
	3	588160.00	408.014	408.181
	4	588170.00	407.984	408.188
	5	588180.00	407.954	408.187
	6	588190.00	407.924	408.174
	7	588200.00	407.894	408.150
	8	588210.00	407.864	408.113
	9	588220.00	407.834	408.064
	10	588230.00	407.804	408.006
	11	588240.00	407.774	407.941
	℄ SPLICE	588245.00	407.759	407.906
	12	588250.00	407.744	407.871
	13	588260.00	407.714	407.799
	14	588270.00	407.684	407.733
	15	588280.00	407.654	407.674
	℄ PIER 5	588290.00	407.624	407.624
6	1	588300.00	407.594	407.581
	2	588310.00	407.564	407.546
	3	588320.00	407.534	407.521
	4	588330.00	407.504	407.504
	℄ SPLICE	588335.00	407.489	407.498
	5	588340.00	407.474	407.493
	6	588350.00	407.444	407.482
	7	588360.00	407.414	407.468
	8	588370.00	407.384	407.448
	9	588380.00	407.354	407.419
	10	588390.00	407.324	407.382
	11	588400.00	407.294	407.339
	℄ SPLICE	588405.00	407.279	407.316
7	12	588410.00	407.264	407.291
	13	588420.00	407.234	407.245
	14	588430.00	407.204	407.204
	15	588440.00	407.174	407.169
	℄ PIER 6	588450.00	407.144	407.144
	1	588460.00	407.114	407.124
	2	588470.00	407.084	407.114
	3	588480.00	407.054	407.109
	4	588490.00	407.024	407.107
	℄ SPLICE	588495.00	407.009	407.106
	5	588500.00	406.994	407.104
	6	588510.00	406.964	407.095
	7	588520.00	406.934	407.077
	8	588530.00	406.904	407.052
	9	588540.00	406.874	407.016
	10	588550.00	406.844	406.970
	11	588560.00	406.814	406.917
	℄ SPLICE	588565.00	406.799	406.889
8	12	588570.00	406.784	406.860
	13	588580.00	406.754	406.802
	14	588590.00	406.724	406.749
	15	588600.00	406.694	406.703
	℄ PIER 7	588610.00	406.664	406.664
	1	588620.00	406.634	406.634
	2	588630.00	406.604	406.613
	3	588640.00	406.574	406.597
	4	588650.00	406.544	406.589
	℄ SPLICE	588655.00	406.529	406.585
	5	588660.00	406.514	406.580
	6	588670.00	406.484	406.567
	7	588680.00	406.454	406.546
	8	588690.00	406.424	406.516
	9	588700.00	406.394	406.475
	10	588710.00	406.364	406.425
	11	588720.00	406.334	406.367
	℄ PIER 8	588730.00	406.304	406.304

SPANS 9 & 10
EAST BOUND & WEST BOUND

SPAN NO.	LINE NO.	BM. NO.	STATION	ELEV. I.	ELEV. II
9	℄ PIER 8	1	588730.000	406.181	406.181
		2		406.310	406.310
		3		406.302	406.382
	1	1	588740.000	406.151	406.186
		2		406.280	406.304
		3		406.352	406.376
	2	1	588750.000	406.121	406.181
		2		406.250	406.291
		3		406.322	406.363
	3	1	588760.000	406.091	406.157
		2		406.220	406.265
		3		406.292	406.337
	4	1	588770.000	406.061	406.112
		2		406.190	406.225
		3		406.262	406.297
	℄ SPLICE	1	588780.250	406.031	406.057
		2		406.158	406.177
		3		406.231	406.249
	5	1	588788.625	406.006	406.013
		2		406.134	406.139
		3		406.206	406.211
	℄ PIER 9	1	588797.000	405.980	405.980
		2		406.109	406.109
		3		406.181	406.181
10	1	1	588807.000	405.950	405.957
		2		406.079	406.086
		3		406.151	406.156
	2	1	588817.000	405.920	405.951
		2		406.049	406.020
		3		406.121	406.142
	3	1	588827.000	405.890	405.944
		2		406.019	406.056
		3		406.091	406.128
	4	1	588837.000	405.860	405.924
		2		405.989	406.033
		3		406.061	406.106
	5	1	588847.000	405.830	405.888
		2		405.958	405.999
		3		406.031	406.071
	6	1	588857.000	405.800	405.838
		2		405.929	405.955
		3		406.001	406.027
	℄ SPLICE	1	588860.250	405.794	405.826
		2		405.922	405.944
		3		405.994	406.016
	7	1	588869.625	405.763	405.771
		2		405.891	405.897
		3		405.963	405.969
	℄ PIER 10	1	588880.000	405.731	405.731
		2		405.860	405.860
		3		405.932	405.932

SPANS 11 & 12
EAST BOUND & WEST BOUND

SPAN NO.	LINE NO.	BM. NO.	STATION	ELEV. I	ELEV. II
11	℄ PIER 10	1	588880.000	405.731	405.731
		2		405.860	405.860
		3		405.932	405.932
	1	1	588890.000	405.701	405.708
		2		405.830	405.835
		3		405.902	405.907
	2	1	588900.000	405.671	405.701
		2		405.800	405.820
		3		405.872	405.892
	3	1	588910.000	405.641	405.695
		2		405.770	405.806
		3		405.842	405.878
	4	1	588920.000	405.611	405.675
		2		405.740	405.783
		3		405.812	405.855
	5	1	588930.000	405.581	405.639
		2		405.710	405.750
		3		405.782	405.822
	6	1	588940.000	405.551	405.580
		2		405.680	405.707
		3		405.752	405.779
	℄ SPLICE	1	588942.250	405.545	405.578
		2		405.673	405.695
		3		405.745	405.767
	7	1	588952.625	405.514	405.522
		2		405.642	405.648
		3		405.714	405.720
	℄ PIER 11	1	588963.000	405.482	405.482
		2		405.611	405.611
		3		405.683	405.683
12	1	1	588973.000	405.452	405.461
		2		405.581	405.588
		3		405.653	405.660
	2	1	588983.000	405.422	405.457
		2		405.551	405.575
		3		405.623	405.647
	3	1	588993.000	405.392	405.450
		2		405.521	405.561
		3		405.593	405.633
	4	1	589003.000	405.362	405.428
		2		405.491	405.536
		3		405.563	405.608
	5	1	589013.000	405.332	405.387
		2		405.461	405.489
		3		405.533	405.571
	6	1	589023.000	405.302	405.327
		2		405.431	405.448
		3		405.503	405.520
	℄ PIER 12	1	589030.000	405.281	405.281
		2		405.410	405.410
		3		405.482	405.482

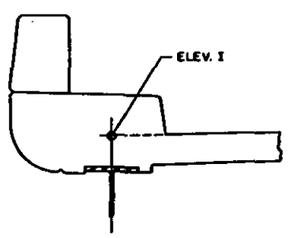

ELEVATIONS AT FASCIA
GIRDERS SPANS 9 TO 28

NOTE: ELEV. I - THEORETICAL GRADE ELEVATIONS TOP OF PAVING.
ELEV. II - THEORETICAL GRADE ELEVATIONS TOP OF PAVING ADJUSTED FOR DEAD LOAD (CONCRETE) DEFLECTIONS.

FOR INFORMATION ONLY

Work this sheet with Sheet 65

CONSOER, TOWNSEND & ASSOCIATES
CONSULTING ENGINEERS CHICAGO, ILLINOIS

ILLINOIS DIVISION OF HIGHWAYS
FAI ROUTE 64 BRIDGE OVER WABASH RIVER
F.A.I. 64 SECTION 97-3 B
WHITE COUNTY, ILLINOIS
POSEY COUNTY, INDIANA

DECK SLAB ELEVATIONS

DESIGNED	DRAWN	TRACED	CHECKED	REVISED	DATE	REVISED
IAA	DEM	DEM	DMP			

F.A.I. RTE. NO.	SECTION	COUNTY	TOTAL SHEETS	SHEET NO.
64	97-3B	White	103	85
FEDERAL ROAD DISTRICT NO.		STATE	PROJ.	

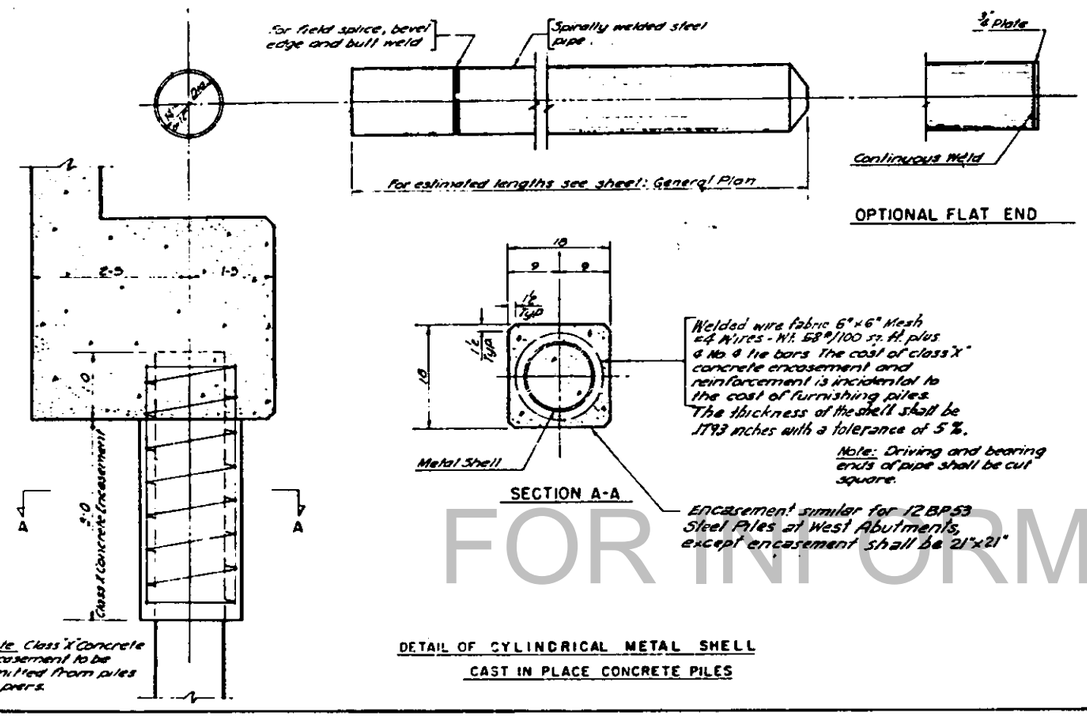

DETAIL OF CYLINDRICAL METAL SHELL
CAST IN PLACE CONCRETE PILES

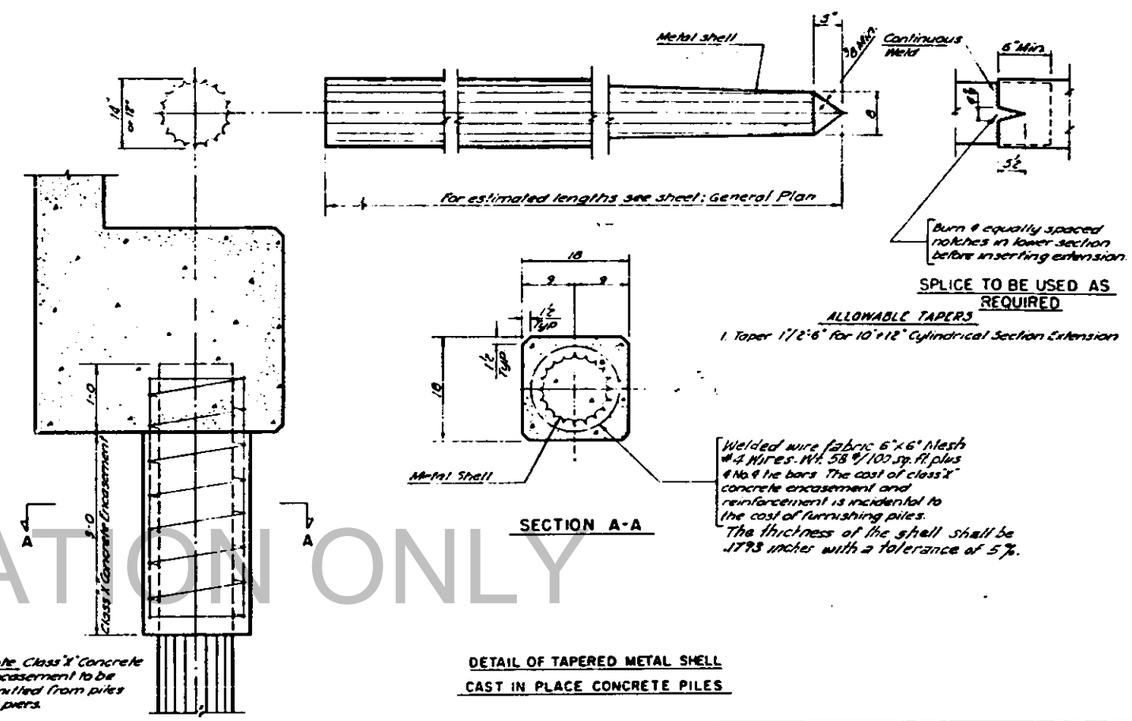

DETAIL OF TAPERED METAL SHELL
CAST IN PLACE CONCRETE PILES

FOR INFORMATION ONLY

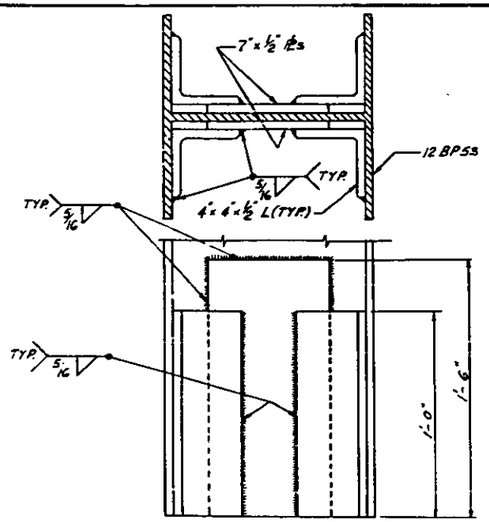

DETAIL OF PILE DRIVING POINT

Note: Pile driving Points to be used on all Piles at Pier Nos. 5, 6 & 7. Cost of driving Point to be incidental to cost of 12BP53 Piles.

CONSOER, TOWNSEND & ASSOCIATES
CONSULTING ENGINEERS CHICAGO ILLINOIS

ILLINOIS DIVISION OF HIGHWAYS
FAI ROUTE 64 BRIDGE OVER WABASH RIVER
F.A.I. 64 SECTION 97-3B
WHITE COUNTY, ILLINOIS
POSEY COUNTY, INDIANA

PILE DETAILS

DESIGNED	DRAWN	TRACED	CHECKED	TECHNICIAN	DATE	REVISED
	GEE	BB				

F.A.I. RTE. NO.	SECTION	COUNTY	TOTAL SHEETS	SHEET NO.
64	97-3B	White	103	84
FEDERAL ROAD DISTRICT NO.		ILLINOIS	FINAL	

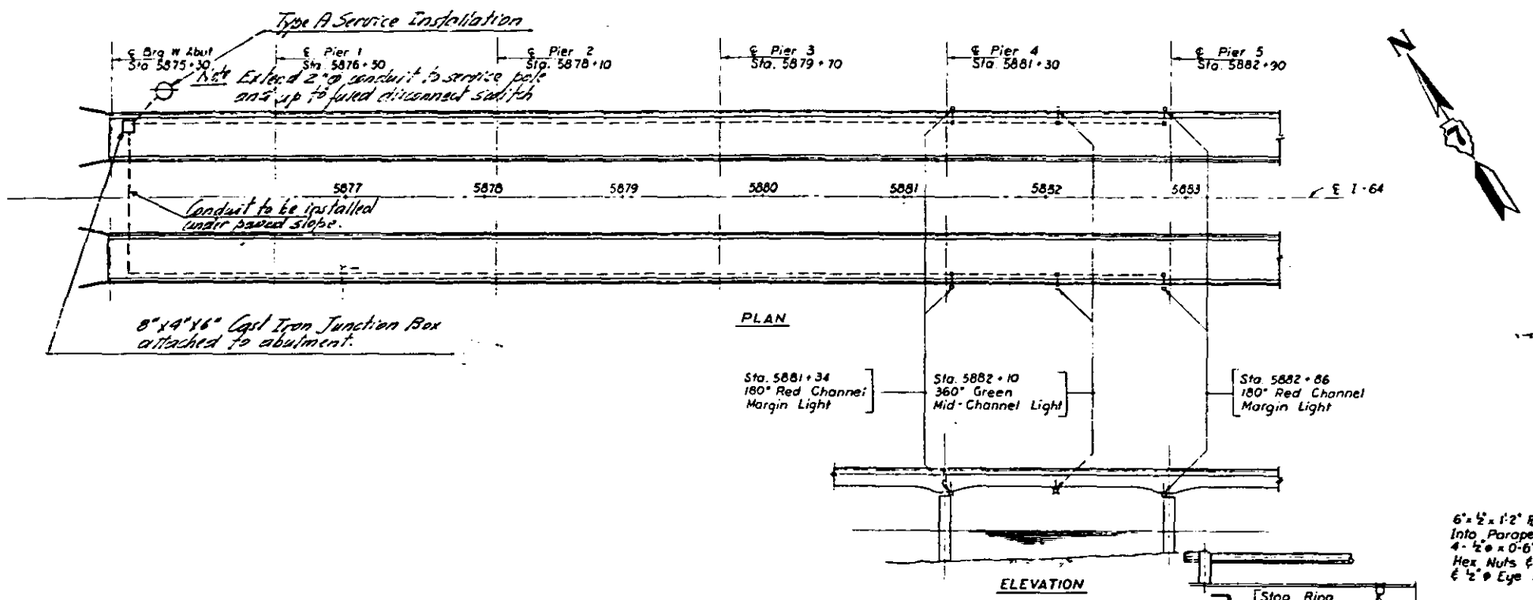

BILL OF MATERIAL		
ITEM	UNIT	QUANTITY
Conduit in Trench 2" Dia. Galv. Steel	Lin. Ft.	100
Conduit Attached to Structure 2" Dia. Galv. Steel	Lin. Ft.	1540
Trench and Backfill	Lin. Ft.	100
Navigational Light 360° Green Mid-Channel	Each	2
Navigational Light 180° Red Channel Margin	Each	4
Electric Cable in Conduit, 600 (Neoprene Rubber Ins.) 1/c #6	Lin. Ft.	3400
Electrical Conductor in Conduit, Bare Annealed Copper, 1/c #6	Lin. Ft.	1700
Service Installation Type A	Each	1

FOR INFORMATION ONLY

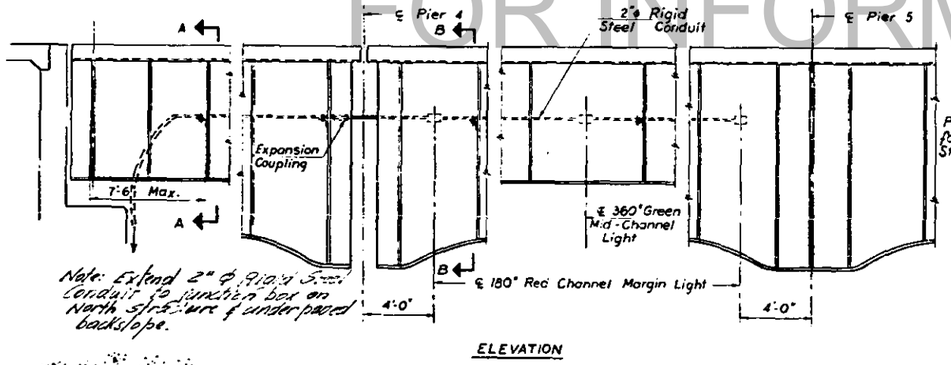

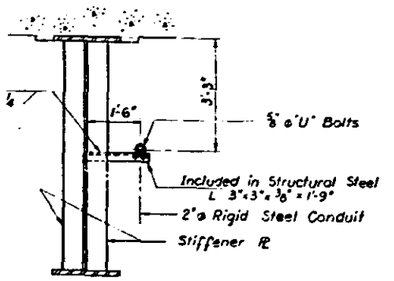

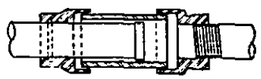

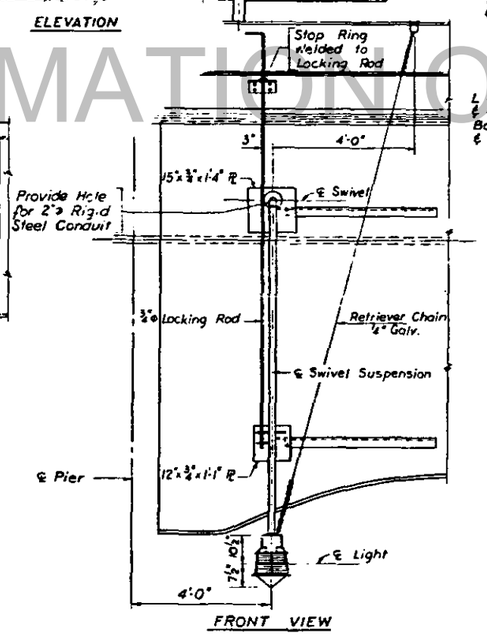

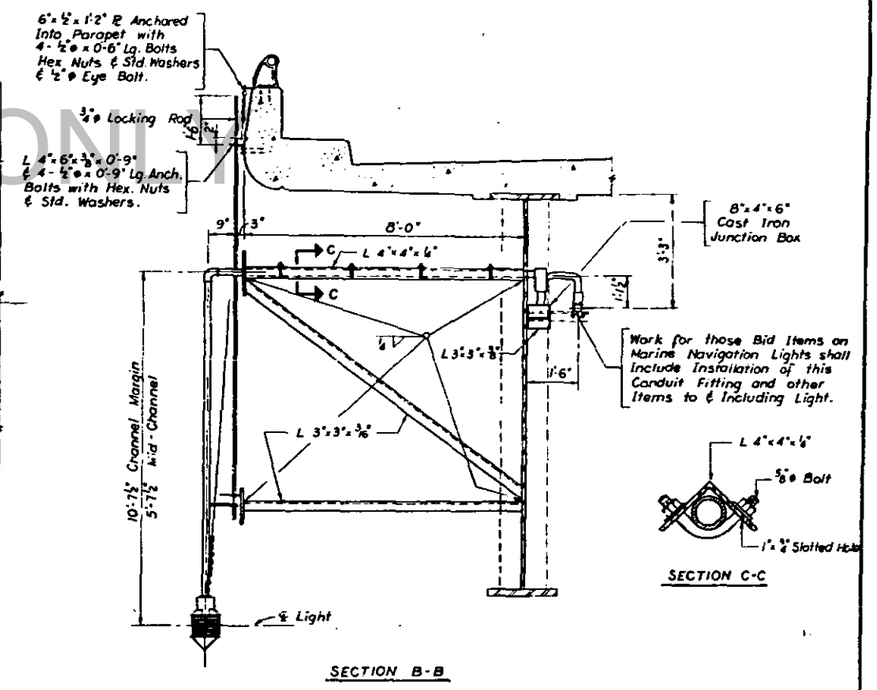

CONSOER, TOWNSEND & ASSOCIATES
CONSULTING ENGINEERS — CHICAGO, ILLINOIS

ILLINOIS DIVISION OF HIGHWAYS
FAI ROUTE 64 BRIDGE OVER WABASH RIVER
F.A.I. 64 SECTION 97-3B
WHITE COUNTY, ILLINOIS
POSEY COUNTY, INDIANA

ELECTRICAL DETAILS

DESIGNED	DRAWN	TRACED	CHECKED	ENGINEER	DATE	REVISED
G.D.W.	T.L.	T.L.	D.M.P.			

Rev. N.M.D. 2/7/66 - as per Hadr. Jackson prints.

STATE OF ILLINOIS
DEPARTMENT OF PUBLIC WORKS & BUILDINGS
DIVISION OF HIGHWAYS

ROUTE NO.	SECTION	COUNTY	TOTAL SHEETS	SHEET NO.
F.A.I. 64	97-3B	WHITE	103	83

SHEET NO.
SHEETS

NOTE: FOR PARAPET ELEVATIONS AND RAIL POST SPACING SEE SHEETS 79, 80, 81, AND 82.

FOR INFORMATION ONLY

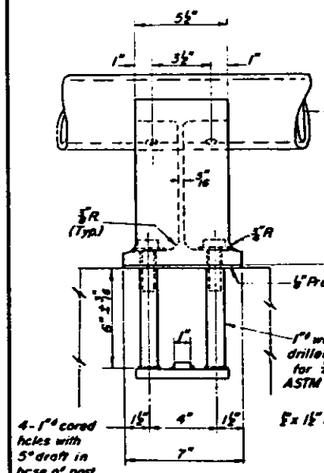

VIEW B-B

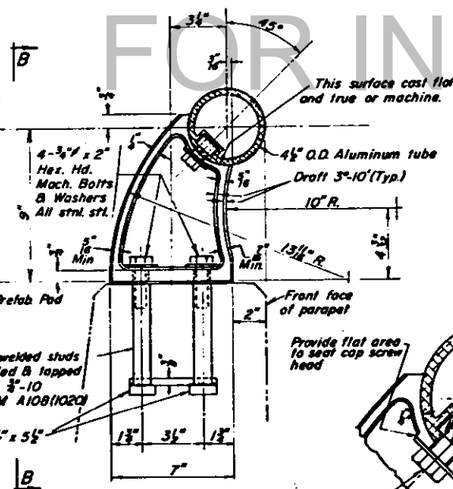

SECTION A-A

RAIL POST DETAILS

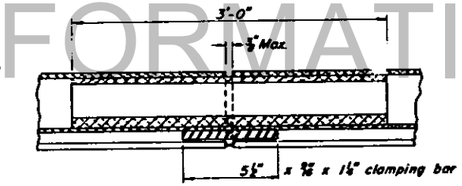

SECTION C-C

CAST END CAP
DRIVE FIT TYPE
48 Required

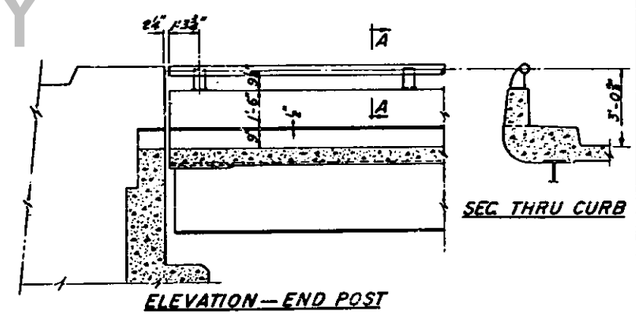

SEC. THRU CURB

ELEVATION—END POST

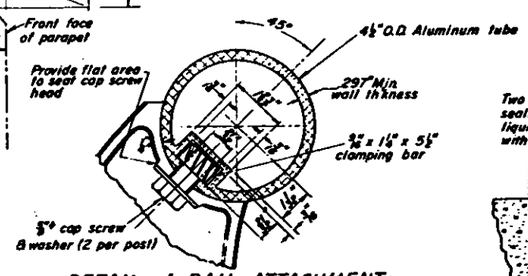

DETAIL of RAIL ATTACHMENT to POST

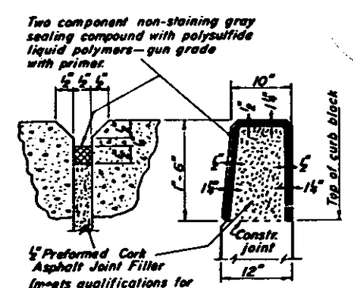

PARAPET JOINT DETAIL

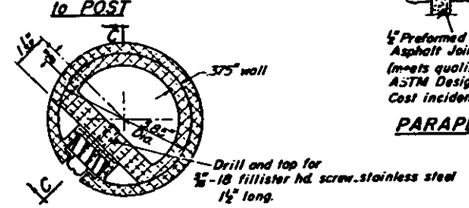

RAILING SPLICE DETAIL

NOTES:

All Posts shall be normal to parapet.

All Aluminum Alloy Extruded Rail shall conform to ASTM specification B-235 alloy 6061-T6, or 6062-T6, and shall extend a minimum of 2 panel lengths (attached to a minimum of 3 posts) except at ends or at open joints where a minimum of 1 panel length is required. All joints in railing must be spliced per detail.

See Special Provisions for following Material Specifications:

Cast Aluminum Alloy Bridge Post Alloy 344-T4.
Stainless Steel Machine Bolts, Washers, and Bars.

For material composition of Prefabricated Pad, see Article 54.9(f), (Bearing and Anchorage), of the Standard Specifications.

METHOD of MEASUREMENT: Aluminum handrail shall be measured in lineal feet. The length paid for shall be the over all length along the top longitudinal railing member thru all posts and gaps.

BASIS of PAYMENT: Aluminum handrail shall be paid for at the contract unit price per lineal foot for ALUMINUM HANDRAIL, measured as specified, which price shall be payment in full for all materials, fabrication, transportation, and erection.

Cost of rail splice, end caps, and hardware to be incidental to item ALUMINUM HANDRAIL.

BILL of MATERIAL

Item	Unit	Quantity
ALUMINUM HANDRAIL	Lin. Ft.	10,802

ALUMINUM HANDRAIL

BRIDGE OVER WABASH RIVER
F.A.I. RT. 64 SECTION 97-3B
WHITE COUNTY, ILLINOIS
POSEY COUNTY, INDIANA

DESIGNED	
CHECKED	
DRAWN Wm. M. Best	
CHECKED	

19
EXAMINED
PASSED
APPROVED

R-19 Dwn. 6-25-64

F.A.I. RTE. NO.	SECTION	COUNTY	TOTAL SHEETS	SHEET NO.
64	97-3B	White	103	82
FEDERAL ROAD DISTRICT NO.		ILLINOIS		

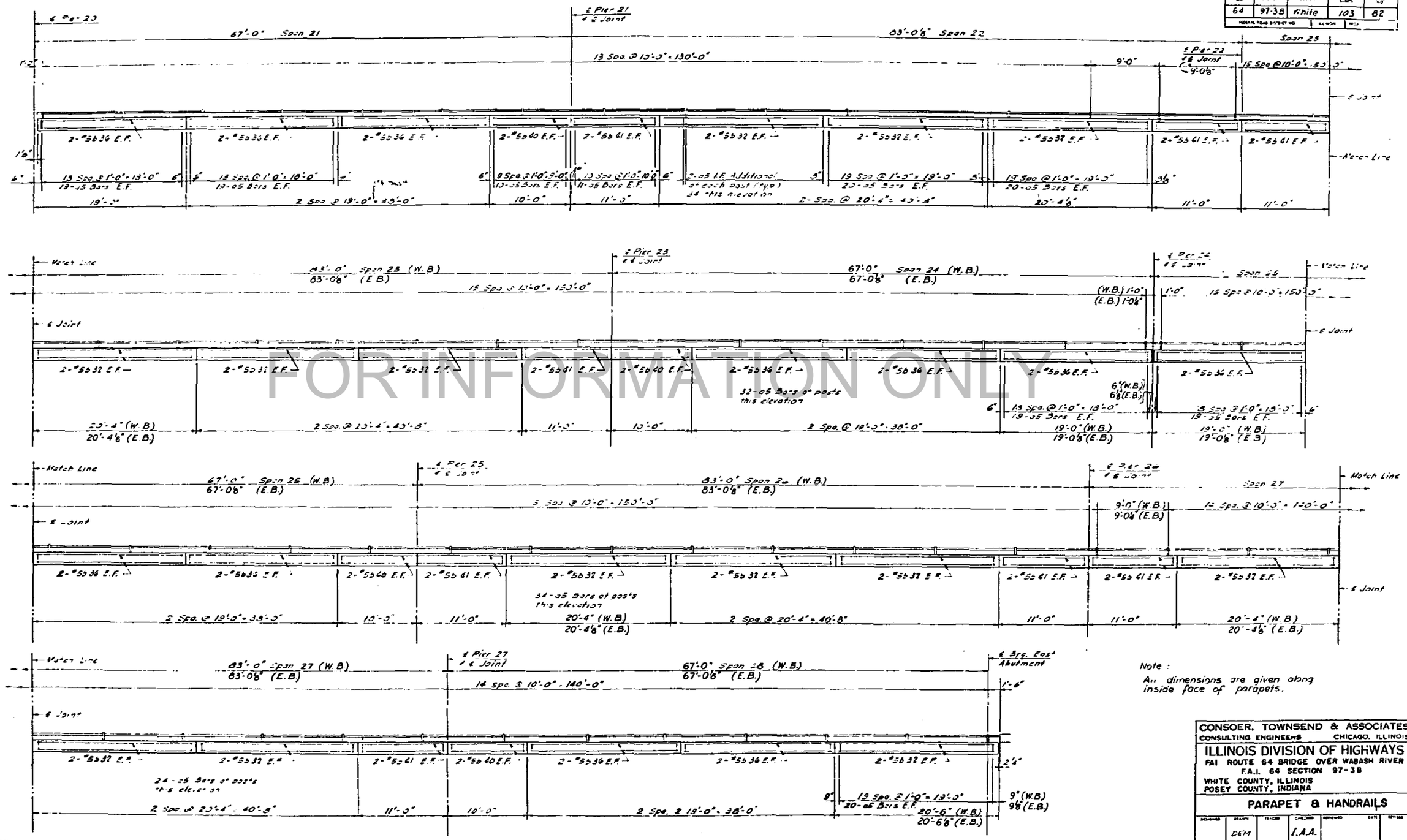

Note :
All dimensions are given along inside face of parapets.

CONSOER, TOWNSEND & ASSOCIATES
CONSULTING ENGINEERS CHICAGO, ILLINOIS

ILLINOIS DIVISION OF HIGHWAYS
FAI ROUTE 64 BRIDGE OVER WABASH RIVER
F.A.I. 64 SECTION 97-3B
WHITE COUNTY, ILLINOIS
POSEY COUNTY, INDIANA

PARAPET & HANDRAILS

DESIGNED	DRAWN	TRACED	CHECKED	APPROVED	DATE	REVISED
	DEM		I.A.A.			

FOR INFORMATION ONLY

F.A.I. RTE. NO.	SECTION	COUNTY	TOTAL SHEETS	SHEET NO.
64	97-3B	White	103	81
FEDERAL ROAD DISTRICT NO.		ILLINOIS	FICO.	

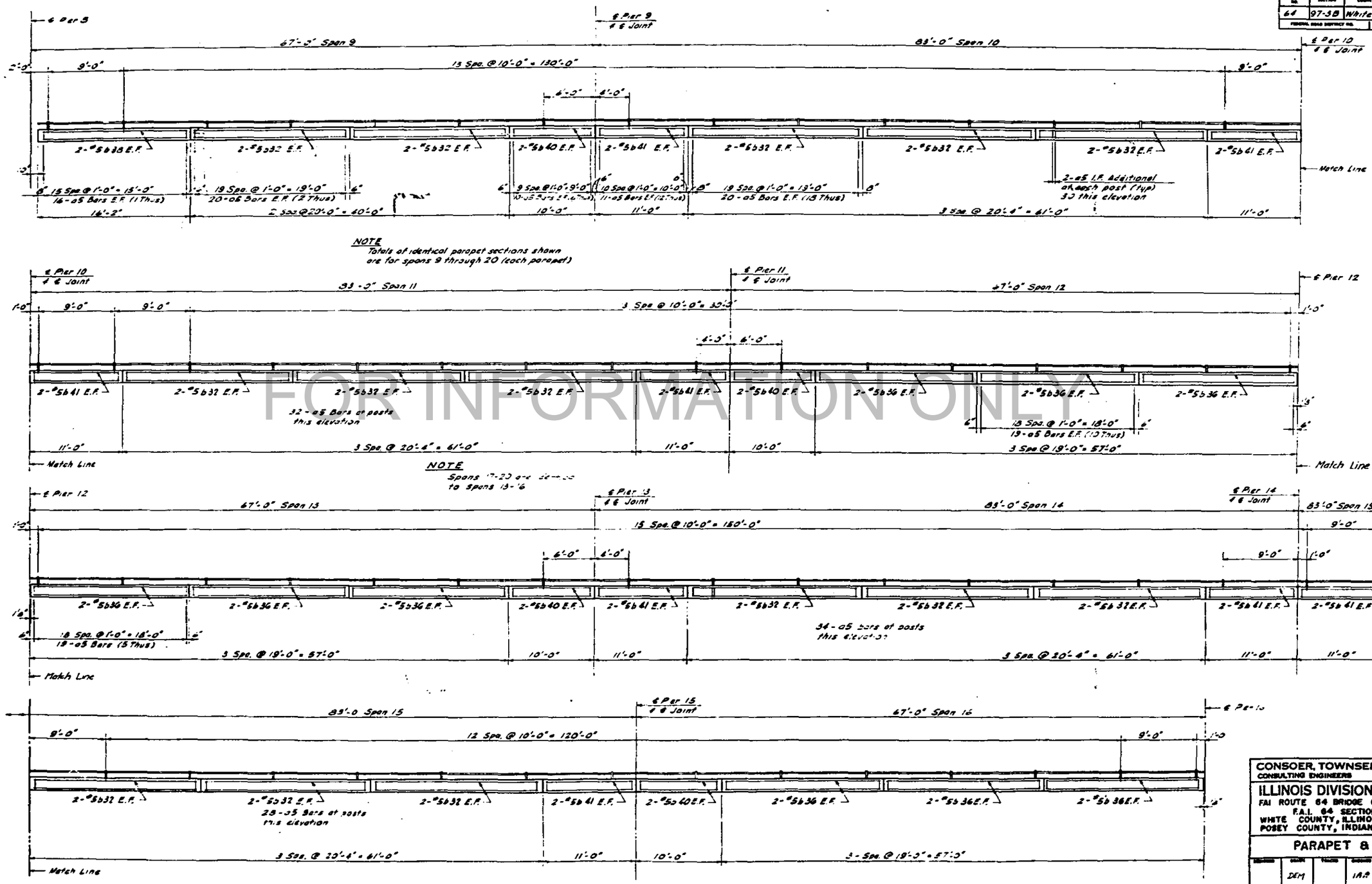

FOR INFORMATION ONLY

CONSOER, TOWNSEND & ASSOCIATES
CONSULTING ENGINEERS — CHICAGO, ILLINOIS

ILLINOIS DIVISION OF HIGHWAYS
FAI ROUTE 64 BRIDGE OVER WABASH RIVER
F.A.I. 64 SECTION 97-3B
WHITE COUNTY, ILLINOIS
POSEY COUNTY, INDIANA

PARAPET & HANDRAILS

DESIGNED	DRAWN	TRACED	CHECKED	CHECKED	DATE	REVISED
	DEM		IAR			

F.A.I. RTE. NO.	SECTION	COUNTY	TOTAL SHEETS	SHEET NO.
64	97-3B	White	103	80
FEDERAL ROAD DISTRICT NO.		ILLINOIS	FEDERAL	

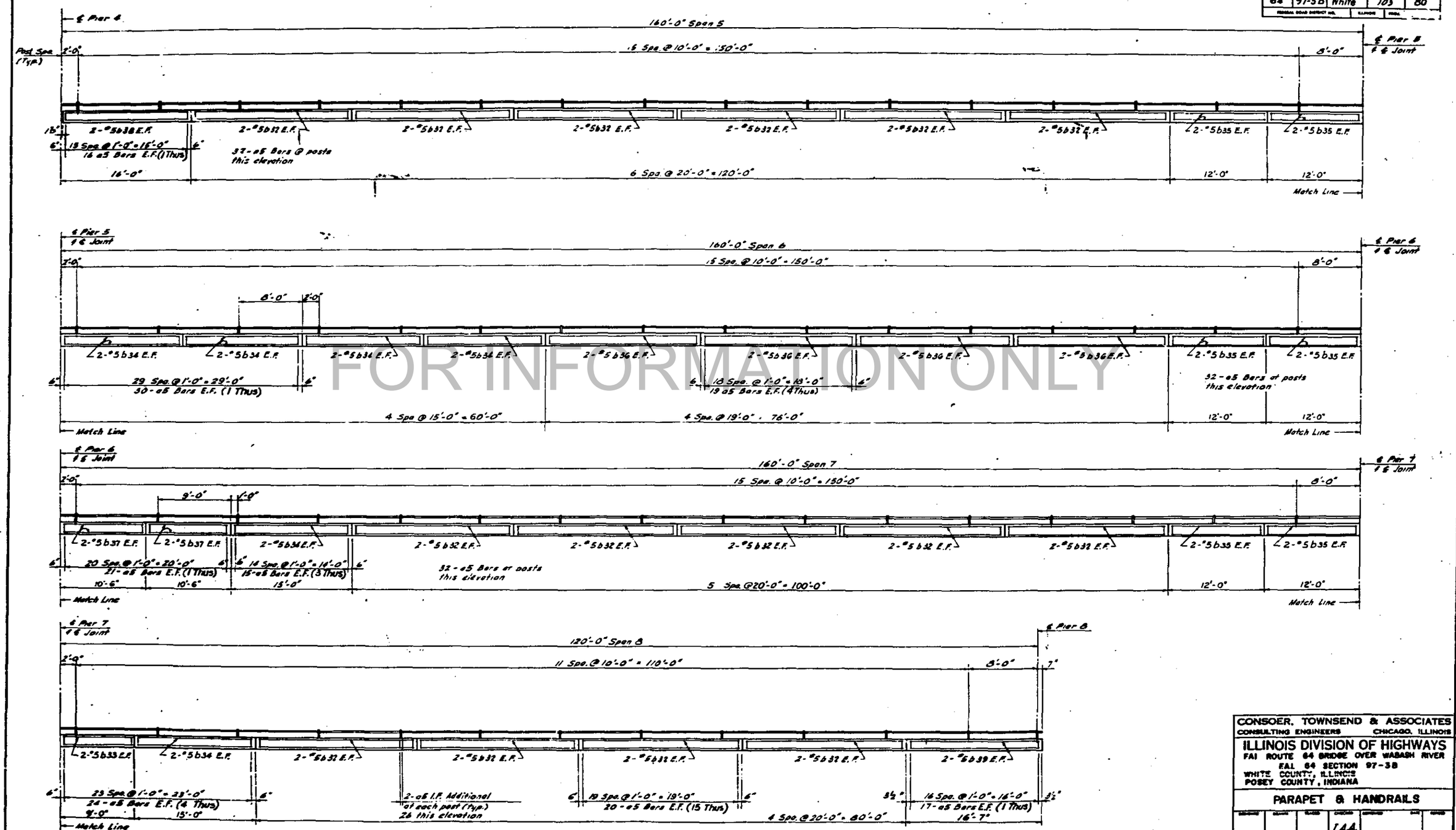

FOR INFORMATION ONLY

CONSOER, TOWNSEND & ASSOCIATES
CONSULTING ENGINEERS CHICAGO, ILLINOIS

ILLINOIS DIVISION OF HIGHWAYS
FAI ROUTE 64 BRIDGE OVER WABASH RIVER
FAI. 64 SECTION 97-3B
WHITE COUNTY, ILLINOIS
POSEY COUNTY, INDIANA

PARAPET & HANDRAILS

I.A.A.

F.A.I. RTE. NO.	SECTION	COUNTY	TOTAL SHEETS	SHEET NO.
64	97-3B	White	103	79
FEDERAL ROAD DISTRICT NO.		STATE		

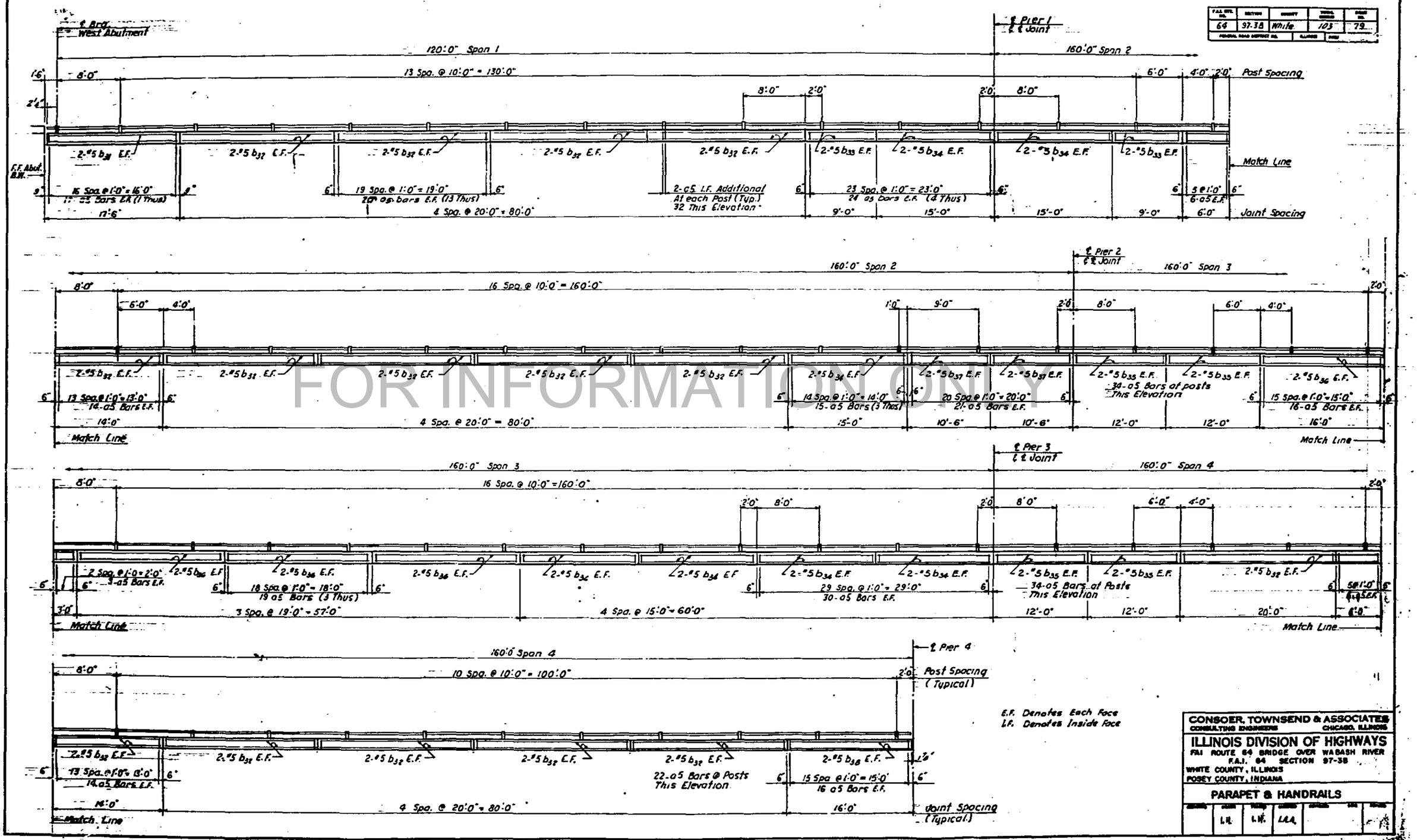

E.F. Denotes Each Face
I.F. Denotes Inside Face

FOR INFORMATION ONLY

CONSOER, TOWNSEND & ASSOCIATES
CONSULTING ENGINEERS CHICAGO, ILLINOIS

ILLINOIS DIVISION OF HIGHWAYS
FAI ROUTE 64 BRIDGE OVER WABASH RIVER
F.A.I. 64 SECTION 97-3B
WHITE COUNTY, ILLINOIS
POSEY COUNTY, INDIANA

PARAPET & HANDRAILS

DESIGNED	DRAWN	TRACED	CHECKED	SUBMITTED	SEAL	REVISED
	L.H.	L.H.	L.A.A.			

F.A.I. RTE. NO.	SECTION	COUNTY	TOTAL SHEETS	SHEET NO.
64	97-3B	White	103	78
FEDERAL ROAD DISTRICT NO.		ILLINOIS	PROJ.	

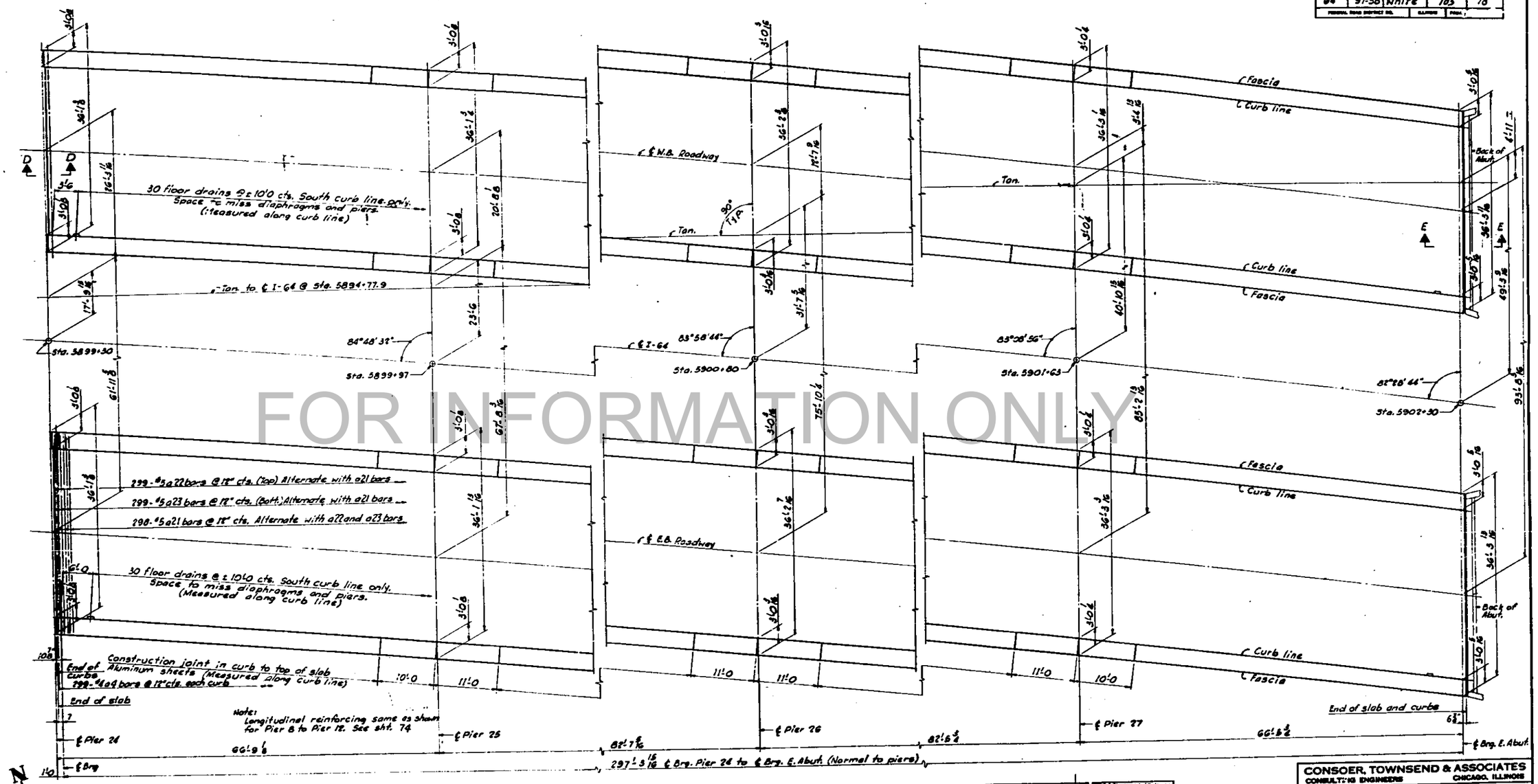

FOR INFORMATION ONLY

CONSOER, TOWNSEND & ASSOCIATES
CONSULTING ENGINEERS CHICAGO, ILLINOIS

ILLINOIS DIVISION OF HIGHWAYS
FAI ROUTE 64 BRIDGE OVER WABASH RIVER
F.A.I. 64 SECTION 97-3B
WHITE COUNTY, ILLINOIS
POSEY COUNTY, INDIANA

SUPERSTRUCTURE

D.W.P. | 18A

F.A.I. RTE. NO.	SECTION	COUNTY	TOTAL SHEETS	SHEET NO.
64	97-38	White	103	77
FEDERAL ROAD DISTRICT NO.		STATE	FILE	

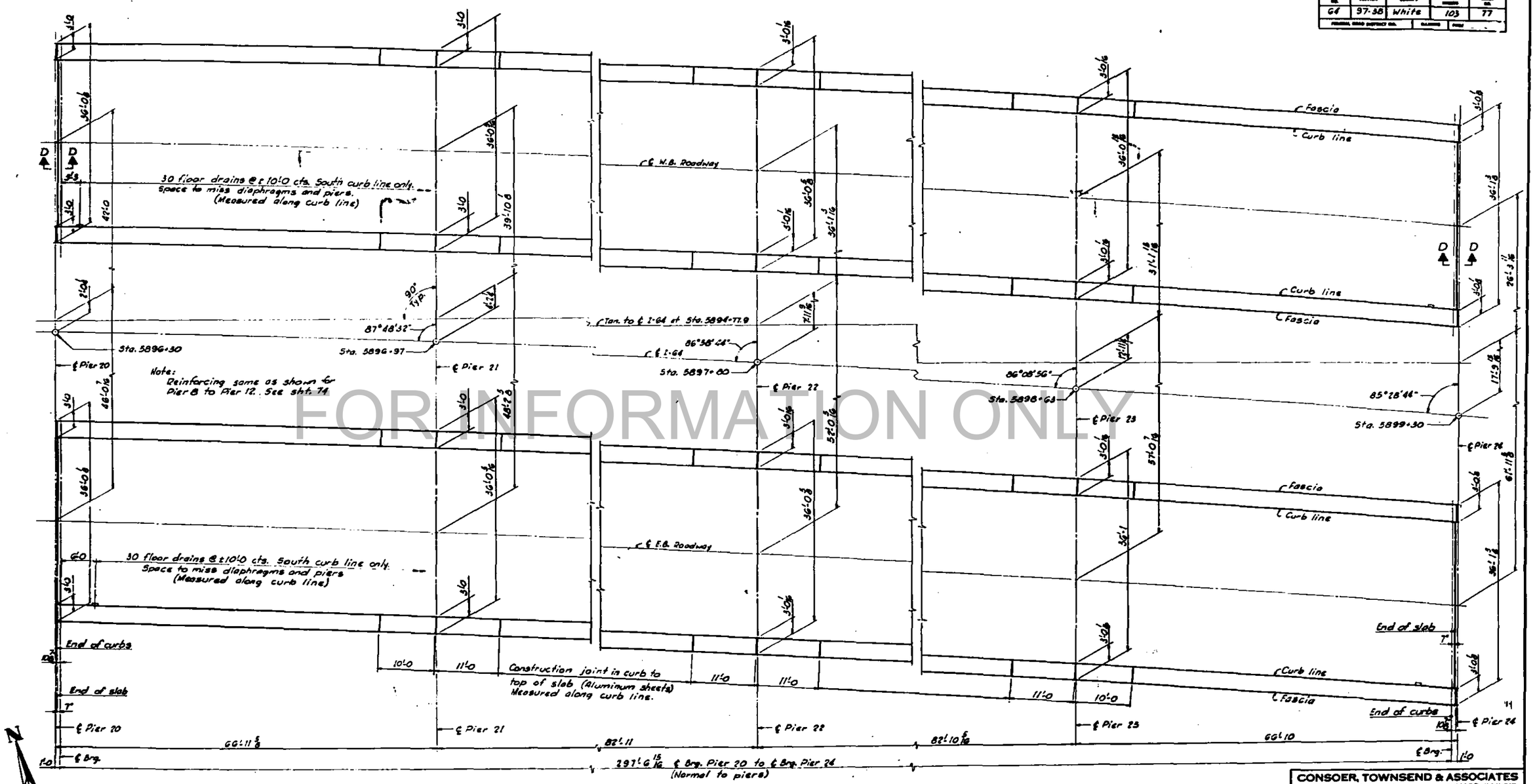

FOR INFORMATION ONLY

CONSOER, TOWNSEND & ASSOCIATES
CONSULTING ENGINEERS CHICAGO, ILLINOIS

ILLINOIS DIVISION OF HIGHWAYS
FAI ROUTE 64 BRIDGE OVER WABASH RIVER
F.A.I. 64 SECTION 97-38
WHITE COUNTY, ILLINOIS
POSEY COUNTY, INDIANA

SUPERSTRUCTURE

D.M.P. IAA

F.A.I. RTE. NO.	SECTION	COUNTY	TOTAL SHEETS	SHEET NO.
64	97-38	White	103	76
FEDERAL ROAD DISTRICT NO.		ILLINOIS	FED. AID PROJ.	

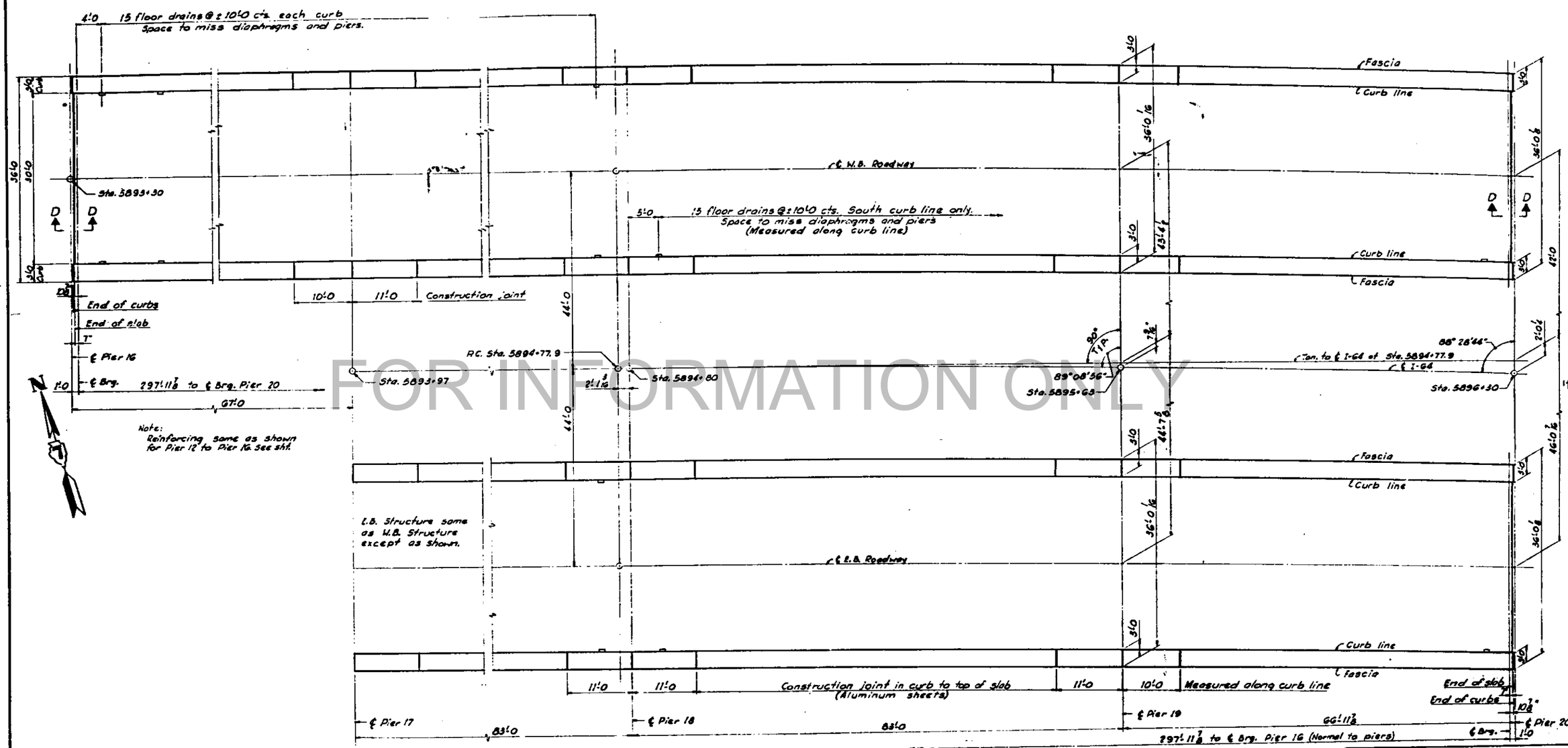

FOR INFORMATION ONLY

CONSOER, TOWNSEND & ASSOCIATES
CONSULTING ENGINEERS CHICAGO, ILLINOIS

ILLINOIS DIVISION OF HIGHWAYS
FAI ROUTE 64 BRIDGE OVER WABASH RIVER
F.A.I. 64 SECTION 97-38
WHITE COUNTY, ILLINOIS
POSEY COUNTY, INDIANA

SUPERSTRUCTURE

D.M.P. | IAA

F.A.I. RTE. NO.	SECTION	COUNTY	TOTAL SHEETS	SHEET NO.
64	97-3B	White	103	102
FEDERAL ROAD DISTRICT NO.		ILLINOIS	FEDERAL	

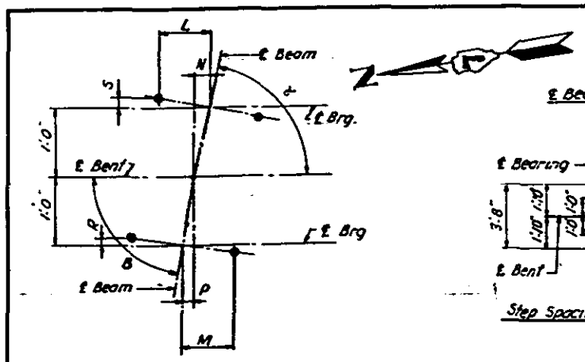

ANCHOR BOLT LOCATION

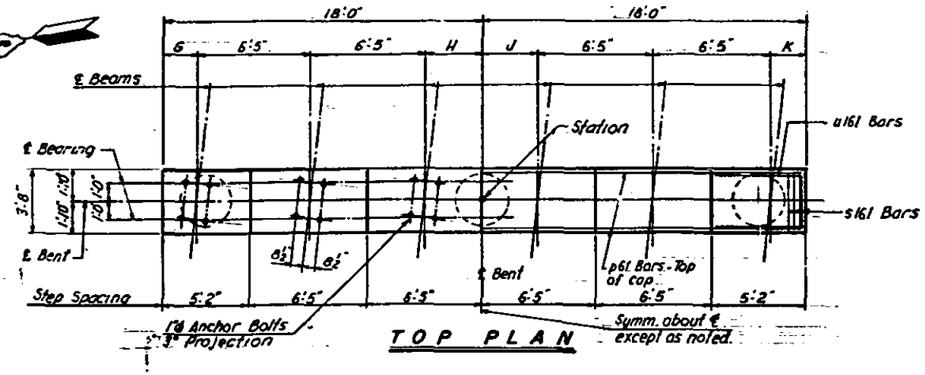

TOP PLAN

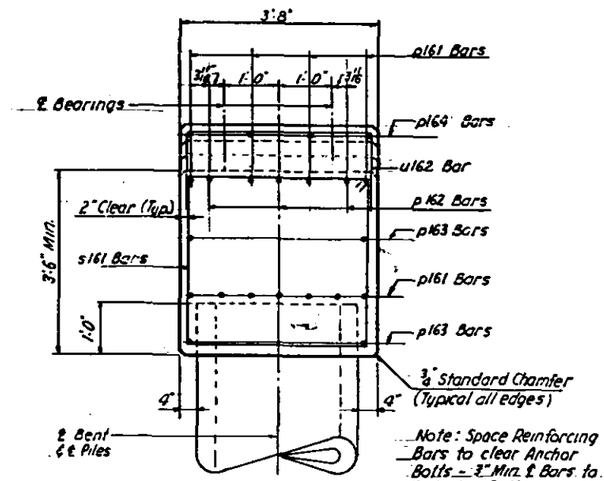

SECTION A-A

BILL OF MATERIAL				
Bar	No.	Size	Length	Shape
p161	11	9	35'-6"	
p162	3	9	9'-0"	
p163	4	5	35'-6"	
p164	4	5	17'-6"	
s161	34	5	14'-2"	
u161	8	6	12'-10"	
u162	18	4	6'-4	
Reinforcement Bars			Lbs.	2380
Class X Concrete			Cu. Yds	18.6
36" Prestressed Conc. Cylinder Piles 3@60'			Lin. Ft.	180

Quantities shown are for 1 Tone Bent.
Note: Min. length of penetration of piles into existing ground to be 30 ft.

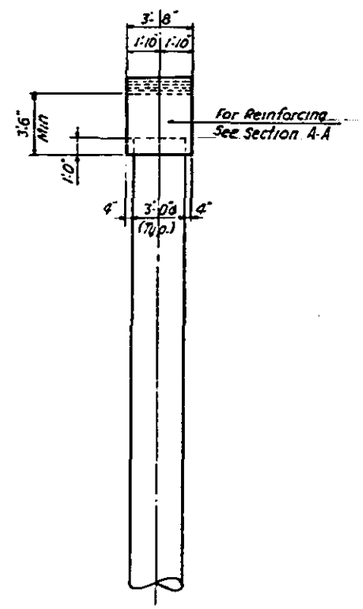

END VIEW

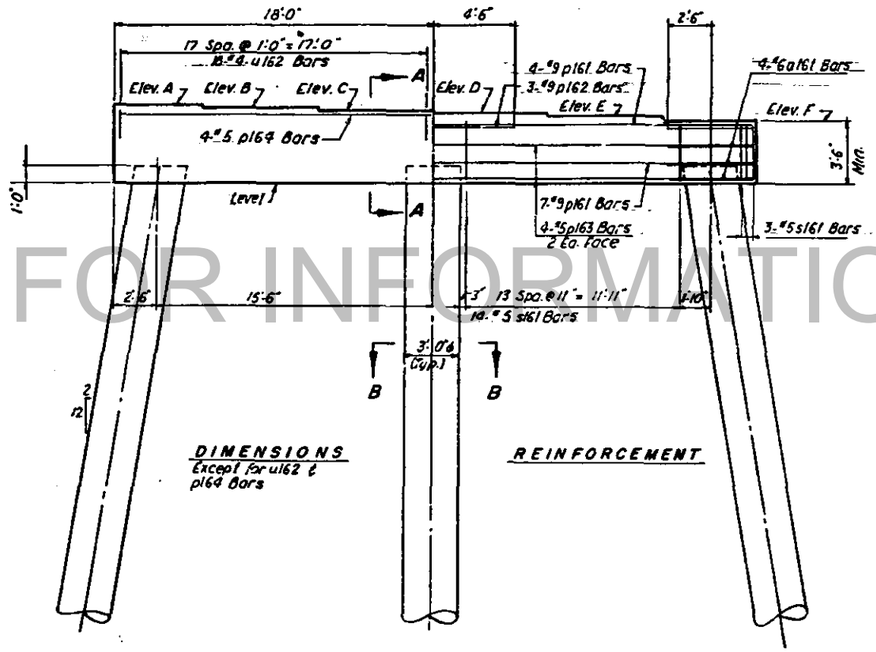

DIMENSIONS
Except for u162 & p164 Bars

REINFORCEMENT

ELEVATION

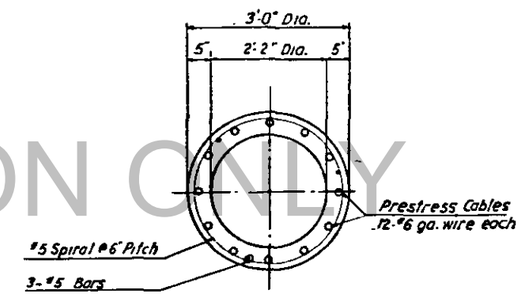

SECTION B-B

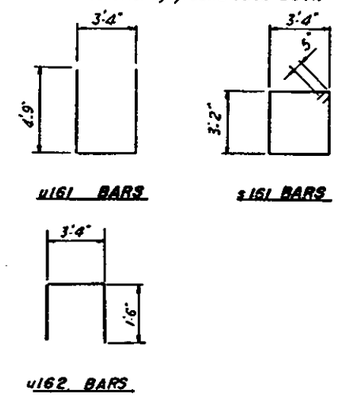

u161 BARS

s161 BARS

u162 BARS

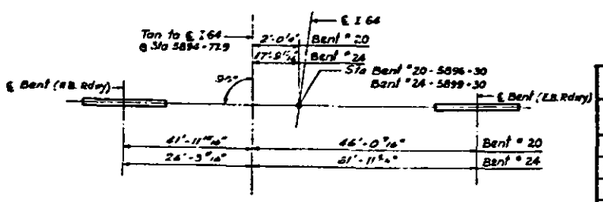

TABLE OF DIMENSIONS, ELEVATIONS & STATIONS

BENT	ELEVATION A	ELEVATION B	ELEVATION C	ELEVATION D	ELEVATION E	ELEVATION F	DIMENSION G	DIMENSION H	DIMENSION J	DIMENSION K	DIMENSION L	DIMENSION M	DIMENSION N	DIMENSION P	DIMENSION R	DIMENSION S	ANGLE α	ANGLE β	STATION
20 W.B.	399.47	399.29	399.11	398.93	398.75	398.57	1'-10 3/16"	3'-3 13/16"	3'-1 3/16"	2'-0 11/16"	8 1/2"	8 1/2"	3/8"	1/4"	3/16"	1/4"	88°13'40"	88°47'08" * 88°58'20" ✱	5896+28.84
20 E.B.	399.46	399.28	399.10	398.92	398.74	398.56	1'-10 13/16"	3'-3 1/16"	3'-1 13/16"	2'-0 1/16"	8 1/2"	8 1/2"	3/8"	1/4"	3/16"	1/4"	88°13'40"	88°47'08" * 88°58'20" ✱	5896+31.18
24 W.B.	398.58	398.40	398.22	398.04	397.86	397.68	1'-10 5/16"	3'-3 1/2"	3'-1 1/8"	2'-0 3/8"	8 1/2"	8 1/2"	1"	7/8"	5/8"	11/16"	85°13'40"	85°58'19"	5899+26.55
24 E.B.	398.56	398.38	398.20	398.02	397.84	397.66	1'-10 3/16"	3'-3 11/16"	3'-1 5/16"	2'-0 11/16"	8 1/2"	8 1/2"	1"	7/8"	5/8"	11/16"	85°13'40	85°55'03	5899+33.51

As Awarded. * As Built 6-7-66 L.W.

Use For W.B. & E.B. Structures

CONSOER, TOWNSEND & ASSOCIATES
CONSULTING ENGINEERS CHICAGO, ILLINOIS

ILLINOIS DIVISION OF HIGHWAYS
FAI ROUTE 64 BRIDGE OVER WABASH RIVER
F.A.I. 64 SECTION 97-3B
WHITE COUNTY, ILLINOIS
POSEY COUNTY, INDIANA

BENTS 20 & 24

DAP	I.H	I.H.	DAP			

FOR INFORMATION ONLY

F.A.I. RTE. NO.	SECTION	COUNTY	TOTAL SHEETS	SHEET NO.
64	97-3B	White	103	101
PROJECT NO.				

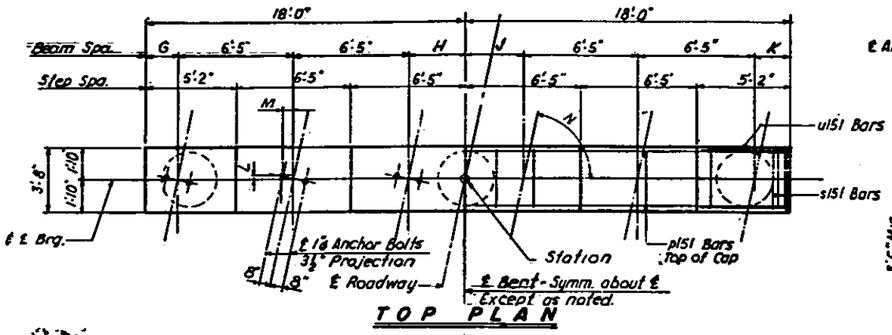

TOP PLAN

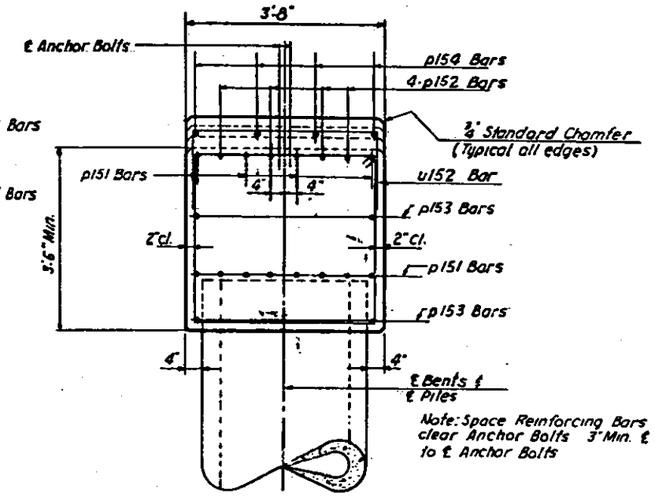

SECTION A-A

BILL OF MATERIAL				
Bar	No.	Size	Length	Shape
p151	12	10	35'-6	
p152	4	10	9'-6	
p153	4	5	35'-6	
p154	4	5	17'-6"	
s151	40	5	14'-2"	
u151	8	6	12'-10"	
u152	18	4	6'-4"	
Reinforcement Bars			Lbs	3030
Class X Concrete			Cu. Yds	18.6
36" Pre-stressed Conc. Cylinder Piles 3@75'			Ln. Ft.	225

Quantities Shown are for 1 (one) Bent.
Note: Min. length of penetration of piles into existing ground to be 35 ft.

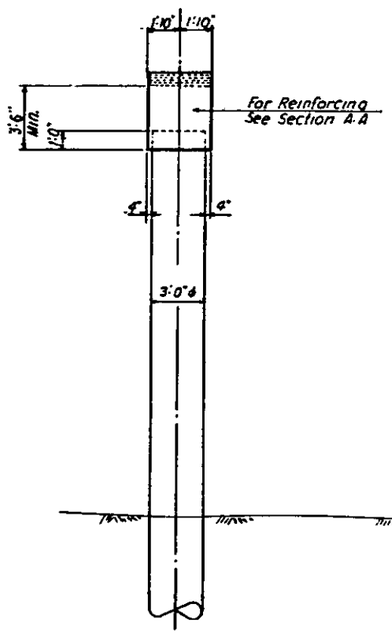

END VIEW

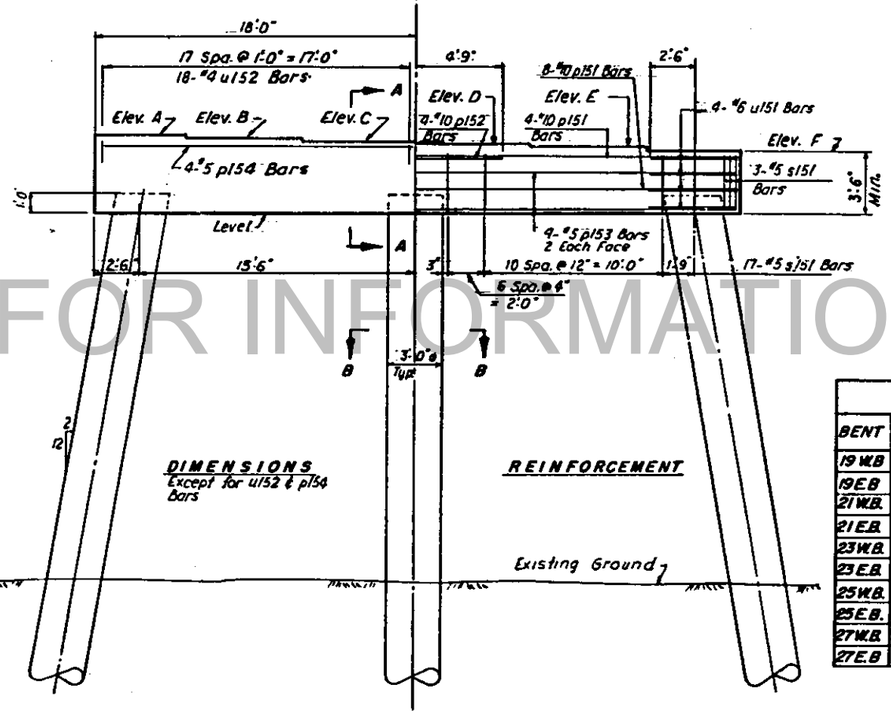

DIMENSIONS
Except for u152 & p154 Bars

REINFORCEMENT

ELEVATION

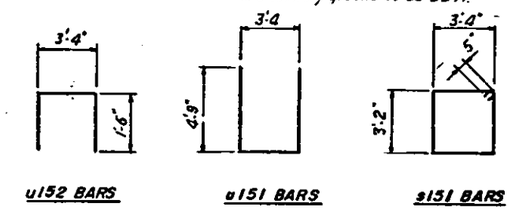

u152 BARS u151 BARS s151 BARS

FOR INFORMATION ONLY

88°58'20" *
88°58'20" *

TABLE OF DIMENSIONS, ELEVATIONS & STATIONS														
BENT	ELEVATION						DIMENSION						ANGLE	STATION
	A	B	C	D	E	F	G	H	J	K	L	M	N	
19 W.B.	399.42	399.30	399.12	398.94	398.76	398.58	2'-0 7/16"	3'-1 11/16"	3'-3 5/16"	1'-10 11/16"	3/16"	8"	88°47'09"	5895+62.35
19 E.B.	399.47	399.29	399.11	398.93	398.75	398.57	2'-1 1/8"	3'-0 3/8"	3'-4 5/8"	1'-9 3/8"	3/16"	8"	88°47'09"	5895+63.66
21 W.B.	399.08	398.90	398.72	398.54	398.36	398.18	1'-11 1/2"	3'-2 1/2"	3'-2 1/2"	1'-11 1/2"	5/16"	8"	87°34'53"	5896+95.33
21 E.B.	399.07	398.89	398.71	398.53	398.35	398.17	1'-11 11/16"	3'-2 5/16"	3'-2 11/16"	1'-11 5/16"	5/16"	8"	87°34'53"	5896+98.70
23 W.B.	398.58	398.40	398.22	398.04	397.86	397.68	2'-0 1/16"	3'-1 15/16"	3'-3 9/16"	1'-10 15/16"	9/16"	8"	85°58'19"	5898+60.06
23 E.B.	398.57	398.39	398.21	398.03	397.85	397.67	2'-0 1/4"	3'-1 3/8"	3'-3 1/4"	1'-10 3/8"	9/16"	8"	85°35'03"	5898+65.98
25 W.B.	398.19	398.01	397.83	397.65	397.47	397.29	2'-0 1/4"	3'-1 1/4"	3'-3 1/4"	1'-10 3/8"	3/4"	7 13/16"	84°34'53"	5899+93.03
25 E.B.	398.17	397.99	397.81	397.63	397.45	397.27	1'-10 5/16"	3'-3 1/16"	3'-1 15/16"	2'-0 1/16"	3/4"	7 13/16"	84°34'53"	5900+01.03
27 W.B.	397.69	397.51	397.33	397.15	396.97	396.79	2'-2"	3'-0"	3'-5"	1'-9"	1"	7 13/16"	82°58'18"	5901+57.75
27 E.B.	397.66	397.48	397.30	397.12	396.94	396.76	1'-10 7/16"	3'-3 3/16"	3'-1 5/8"	2'-0 1/16"	1"	7 13/16"	82°51'49"	5901+68.33

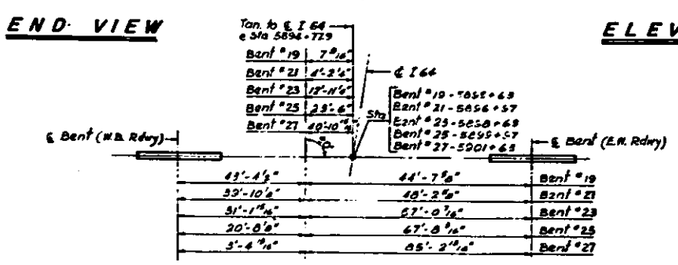

Use for W.B. & E.B. Structures
For Section B-B, See Sheet 98

CONSOER, TOWNSEND & ASSOCIATES
CONSULTING ENGINEERS CHICAGO, ILLINOIS

ILLINOIS DIVISION OF HIGHWAYS
FAI ROUTE 64 BRIDGE OVER WABASH RIVER
F.A.I. 64 SECTION 97-3B
WHITE COUNTY, ILLINOIS
POSEY COUNTY, INDIANA

BENTS 19, 21, 23, 25 & 27

DMP	LW	LM	DMP		

(□) As Awarded. * As Built. 6-7-65 L.W.

F.A.I. RTE. NO.	SECTION	COUNTY	TOTAL SHEETS	SHEET NO.
64	97-3B	White	103	100
FEDERAL ROAD PROJECT NO.		ILLINOIS	FED.	

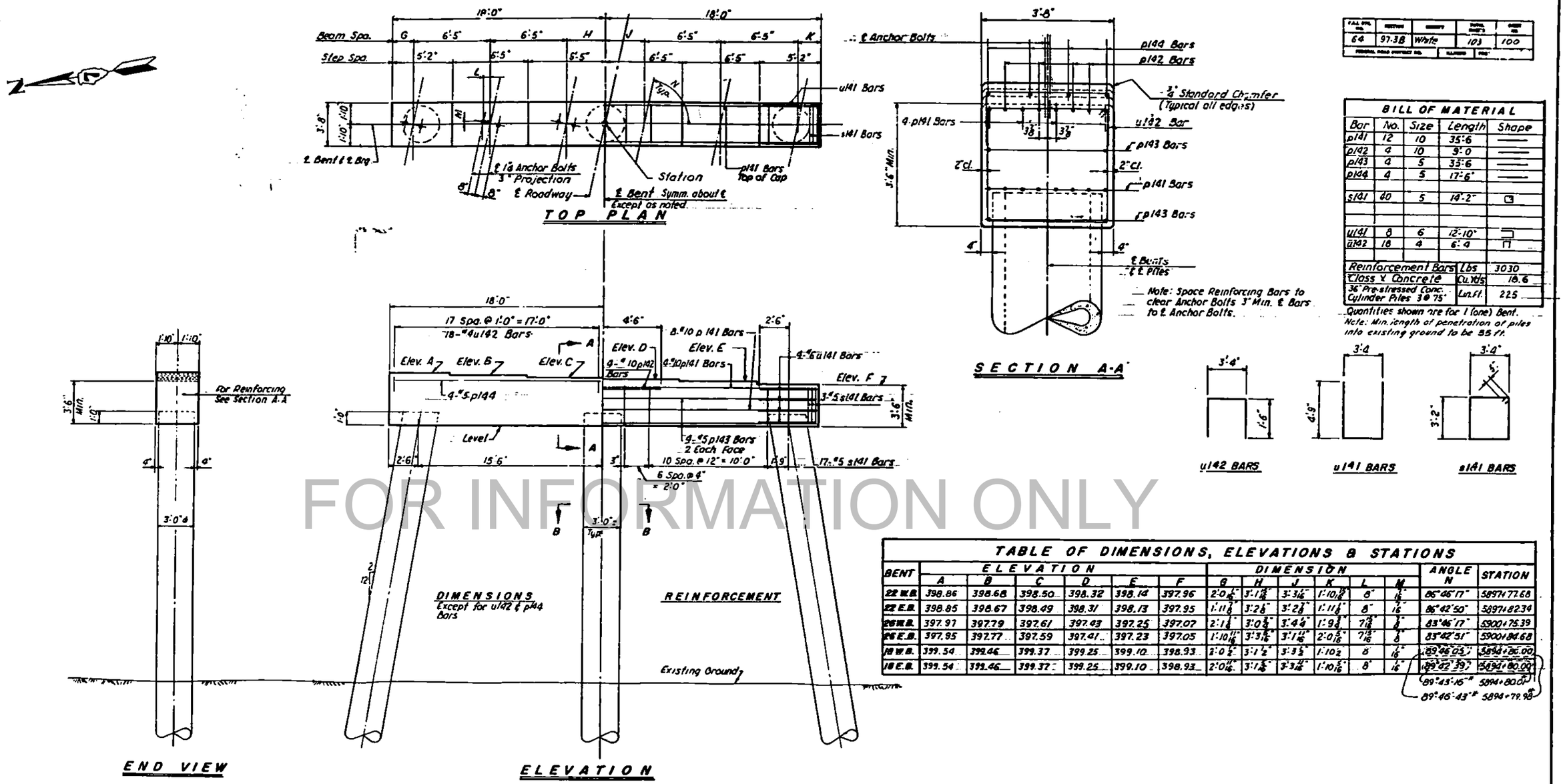

FOR INFORMATION ONLY

BILL OF MATERIAL

Bar	No.	Size	Length	Shape
p141	12	10	35'-6	
p142	4	10	9'-0	
p143	4	5	33'-6	
p144	4	5	17'-6"	
s141	40	5	14'-2"	
u141	8	6	12'-10"	
u142	18	4	6'-4	
Reinforcement Bars			Lbs	3030
Class X Concrete			Cu. Yds	18.6
36" Pre-stressed Conc. Cylinder Piles 3 @ 75'			Ln. Ft.	225

Quantities shown are for 1 (one) Bent.
Note: Min. length of penetration of piles into existing ground to be 55 ft.

TABLE OF DIMENSIONS, ELEVATIONS & STATIONS

BENT	ELEVATION A	B	C	D	E	F	DIMENSION G	H	J	K	L	M	ANGLE N	STATION
22 W.B.	398.86	398.68	398.50	398.32	398.14	397.96	2'-0 5/8"	3'-1 13/16"	3'-3 1/16"	1'-10 15/16"	8"	1/16"	86°46'17"	5897+77.68
22 E.B.	398.85	398.67	398.49	398.31	398.13	397.95	1'-11 7/8"	3'-2 1/8"	3'-2 7/8"	1'-11 1/8"	8"	7/16"	86°42'50"	5897+82.34
26 W.B.	397.97	397.79	397.61	397.43	397.25	397.07	2'-1 1/8"	3'-0 3/8"	3'-4 9/16"	1'-9 3/4"	7 13/16"	3/8"	83°46'17"	5900+75.39
26 E.B.	397.95	397.77	397.59	397.41	397.23	397.05	1'-10 11/16"	3'-3 5/16"	3'-1 11/16"	2'-0 5/16"	7/16	7/8"	83°42'51"	5900+81.68
18 W.B.	399.54	399.46	399.37	399.25	399.10	398.93	2'-0 1/2"	3'-1 1/2"	3'-3 1/2"	1'-10 1/2"	8"	1/16"	89°46'05"	5894+86.00
18 E.B.	399.54	399.46	399.37	399.25	399.10	398.93	2'-0 11/16"	3'-1 5/16"	3'-3 11/16"	1'-10 5/16"	8"	1/16"	89°42'39"	5894+80.00

89°45'16" 5894+80.01
89°46'43" 5894+79.98

Use For W.B. & E.B. Structures
For Section B-B, See Sheet 98

CONSOER, TOWNSEND & ASSOCIATES
CONSULTING ENGINEERS CHICAGO, ILLINOIS

ILLINOIS DIVISION OF HIGHWAYS
FAI ROUTE 64 BRIDGE OVER WABASH RIVER
F.A.I. 64 SECTION 97-3B
WHITE COUNTY, ILLINOIS
POSEY COUNTY, INDIANA

BENTS 18, 22 & 26

DKP | LW | LM | DMP.

As Awarded. * As Built 6-7-66 L.W.

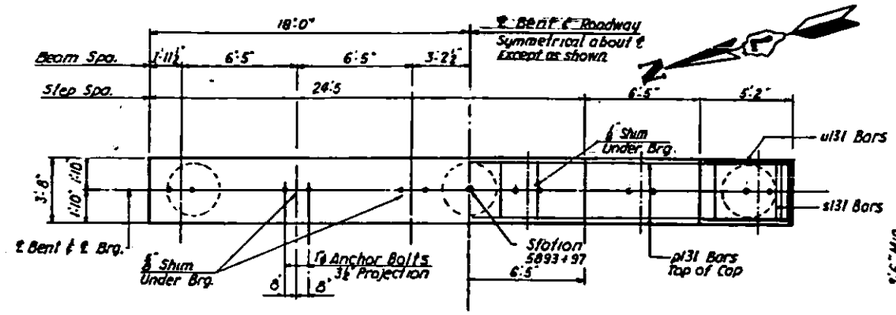

TOP PLAN

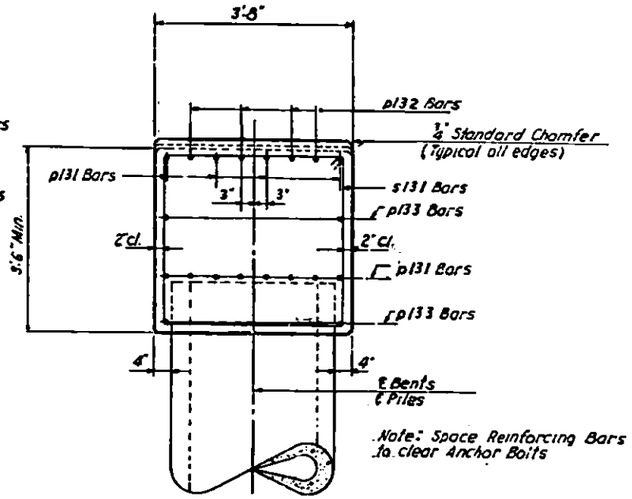

SECTION A-A

F.A.I. RTE. NO.	SECTION	COUNTY	TOTAL SHEETS	SHEET NO.
64	97-3B	White	103	99
FEDERAL ROAD DISTRICT NO.		STATE	ILLINOIS	

BILL OF MATERIAL				
Bar	No.	Size	Length	Shape
p131	12	10	35'-6	
p132	4	10	9'-6	
p133	4	5	35'-6	
s131	40	5	14'-2"	
u131	8	6	12'-10"	
Reinforcement Bars			Lbs	2890
Class X Concrete			Cu. Yds	17.3
36" Prestressed Conc. Cylinder Piles 3@75'			Lin. Ft.	225

Quantities Shown are for 1 (one) Bent.
Note: Min. length of penetration of piles into existing ground to be 45 ft.

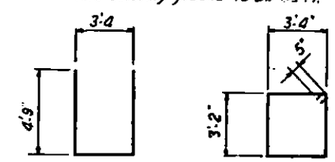

u131 BARS s131 BARS

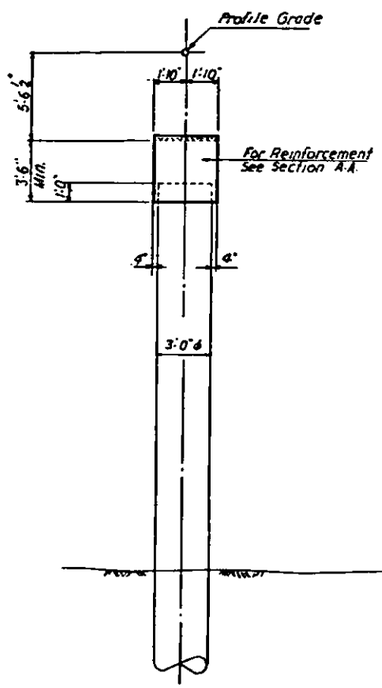

END VIEW

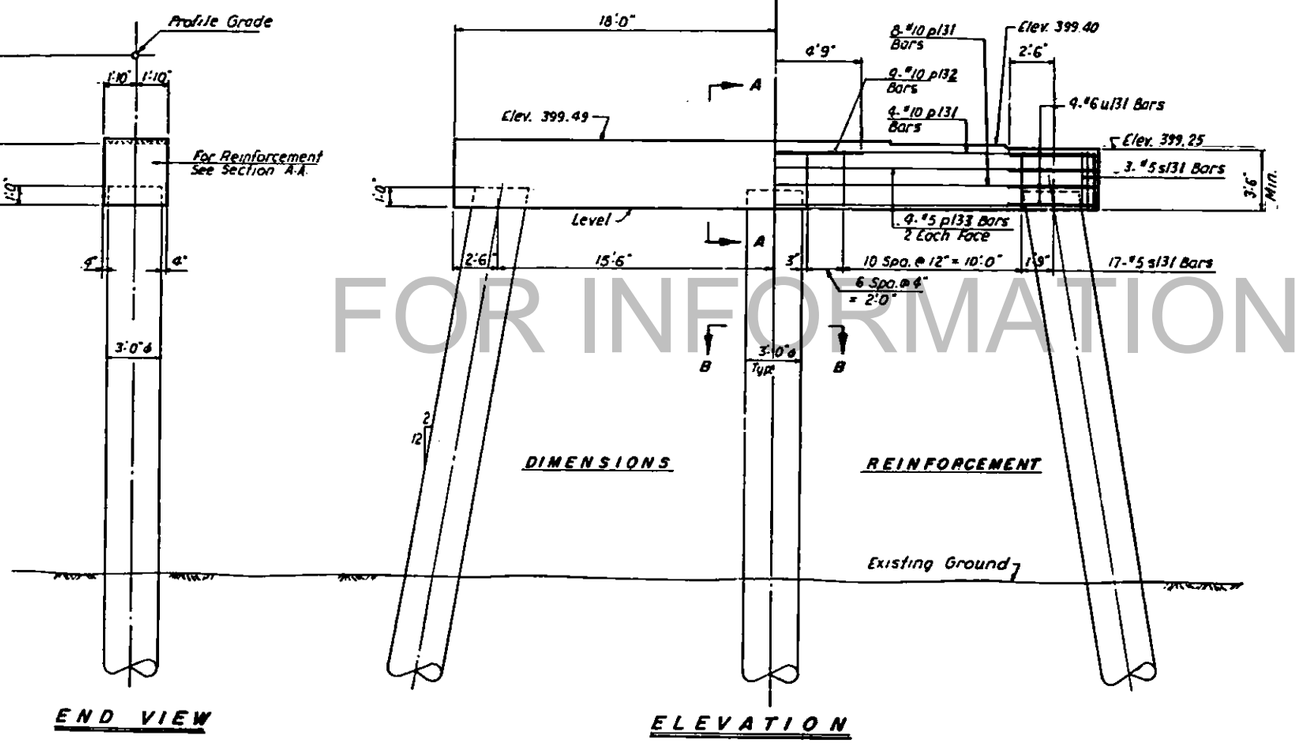

ELEVATION

FOR INFORMATION ONLY

Use For W.B. & E.B. Structures
For Section B-B, See Sheet 98

CONSOER, TOWNSEND & ASSOCIATES
CONSULTING ENGINEERS CHICAGO, ILLINOIS

ILLINOIS DIVISION OF HIGHWAYS
FAI ROUTE 64 BRIDGE OVER WABASH RIVER
F.A.I. 64 SECTION 97-3B
WHITE COUNTY, ILLINOIS
POSEY COUNTY, INDIANA

BENT 17

D.M.P.	L.W.	I.H.	D.M.P.			

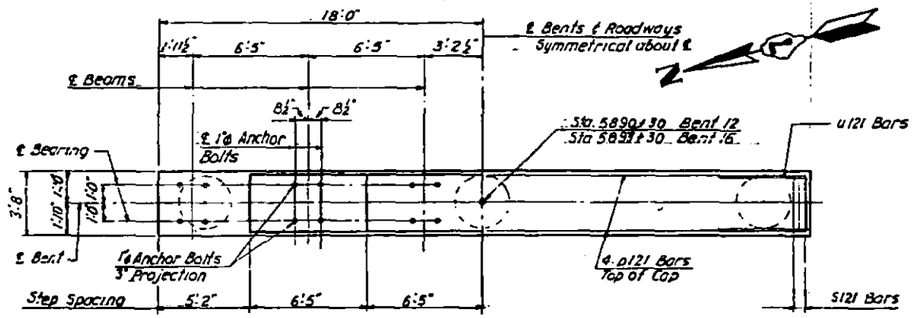

TOP PLAN

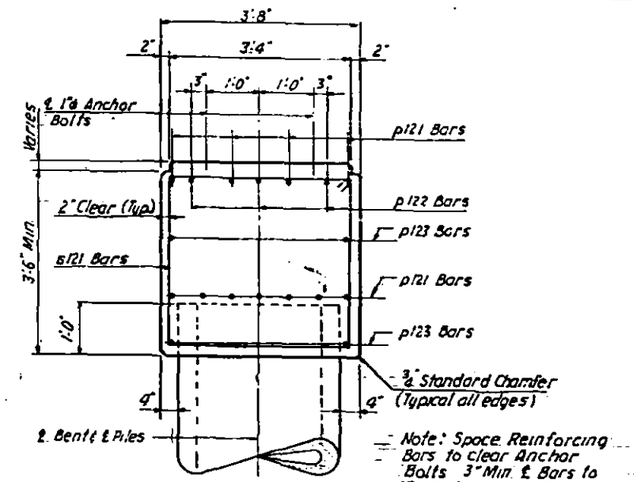

SECTION A-A

F.A.I. RTE. NO.	SECTION	COUNTY	TOTAL SHEETS	SHEET NO.
64	97-3B	White	105	98
PROJECT NO.				

BILL OF MATERIAL

Bar	No.	Size	Length	Shape
p121	11	9	35'-6"	
p122	3	9	9'-0"	
p123	4	5	35'-6"	
s121	34	5	16'-2"	
u121	8	6	12'-10"	
Reinforcement Bars			Lbs.	2,250
Class "X" Concrete			Cu. Yds.	17.0
36" Pre-Stressed Conc. Cylinder Piles 3,000			Lin. Ft.	180

Note: Min. length of penetration of piles into existing ground to be 30 ft.

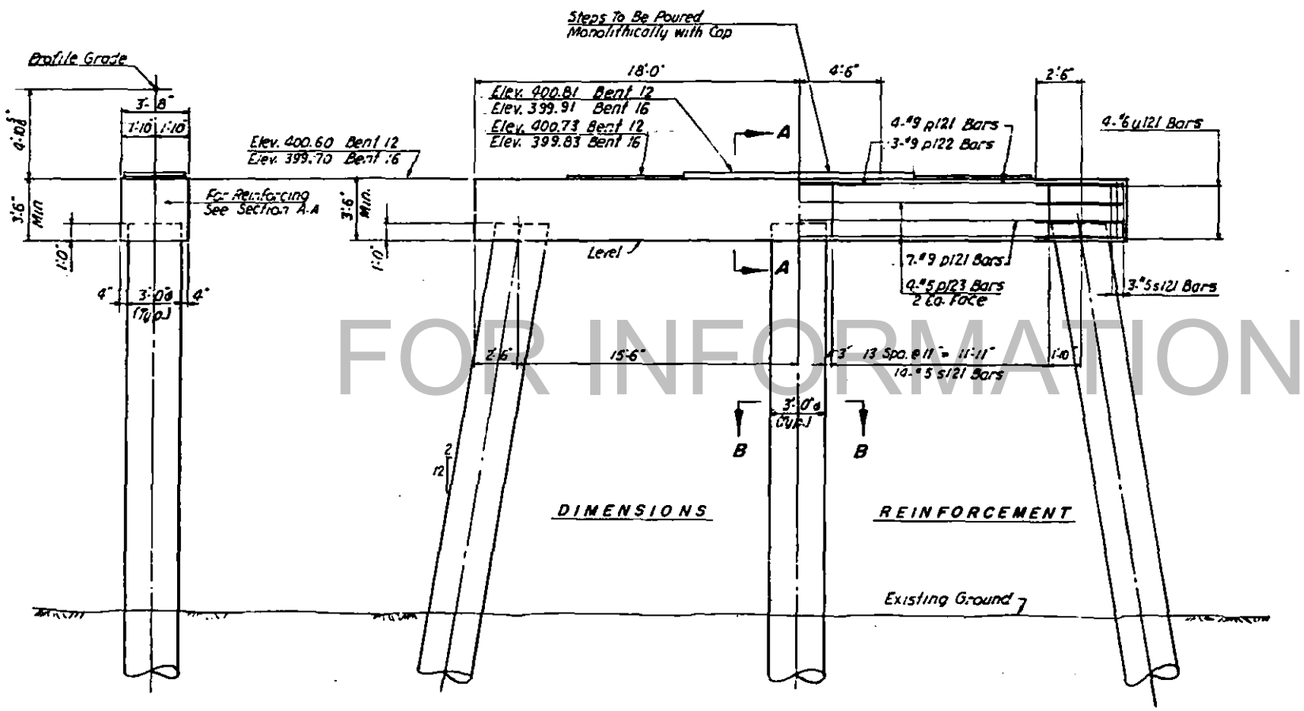

END VIEW

ELEVATION

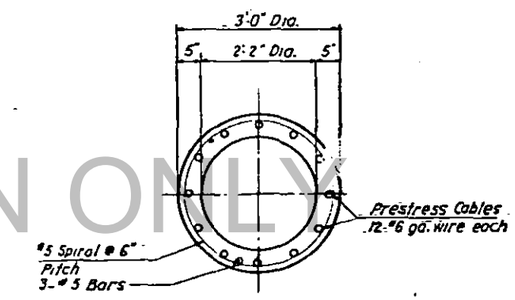

SECTION B-B

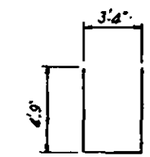

u121 BARS

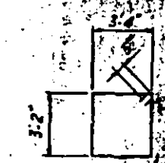

s121 BARS

FOR INFORMATION ONLY

Use For W.B. & E.B. Structures

CONSOER, TOWNSEND & ASSOCIATES
CONSULTING ENGINEERS

ILLINOIS DIVISION OF HIGHWAYS
FAI ROUTE 64 BRIDGE OVER WABASH RIVER
F.A.I. 64 SECTION 97-3B
WHITE COUNTY, ILLINOIS
POSEY COUNTY, INDIANA

BENTS 12 & 16

D.M.R.	I.H.	L.M.	

F.A.I. RTE. NO.	SECTION	COUNTY	TOTAL SHEETS	SHEET NO.
64	97-3B	White	103	97
FEDERAL ROAD DISTRICT NO.		STATE	FUND	

TABLE OF ELEVATIONS AND STATIONS

Bent	Elevation A	Elevation B	Elevation C	Station
10	400.90	401.03	401.10	5888+80
14	400.00	400.13	400.20	5891+80

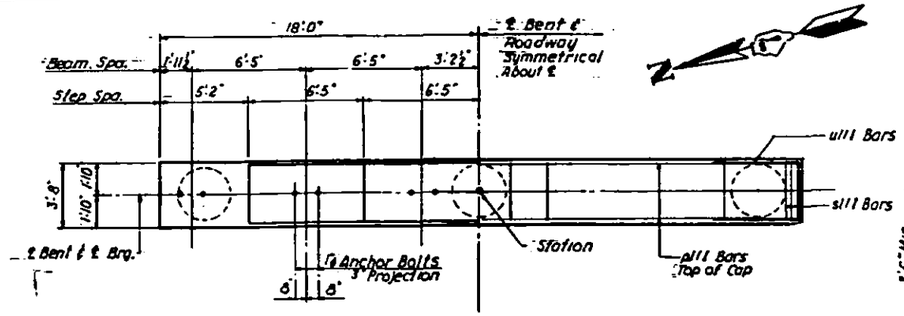

TOP PLAN

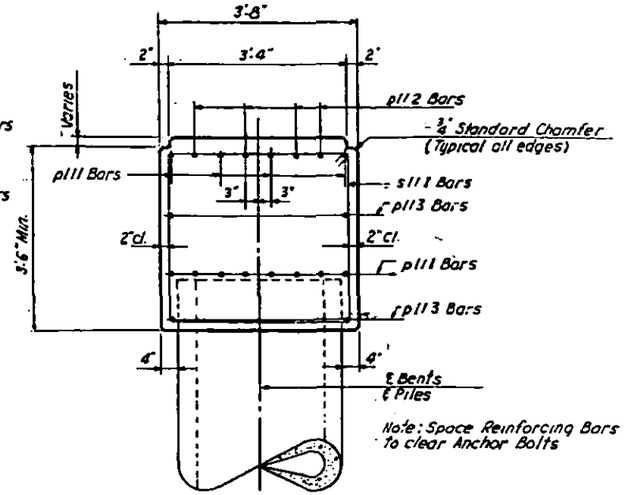

Note: Space Reinforcing Bars to clear Anchor Bolts

SECTION A-A

BILL OF MATERIAL

Bar	No.	Size	Length	Shape
p111	12	10	35'-6"	
p112	4	10	9'-0"	
p113	4	5	35'-6"	
s111	60	5	14'-2"	
u111	8	6	12'-10"	
Reinforcement Bars			Lbs	2880
Class X Concrete			Cu.Yds	17.0
36" Prestressed Conc. Cylinder Piles 3@75'			Lin.Ft	225

Quantities Shown are for 1 (one) Bent.

Note: Min. length of penetration of piles into existing ground is 35 ft.

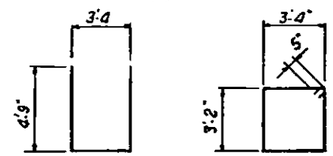

u111 BARS s111 BARS

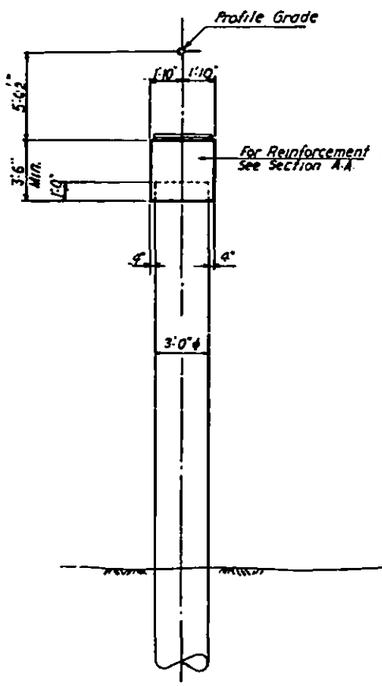

END VIEW

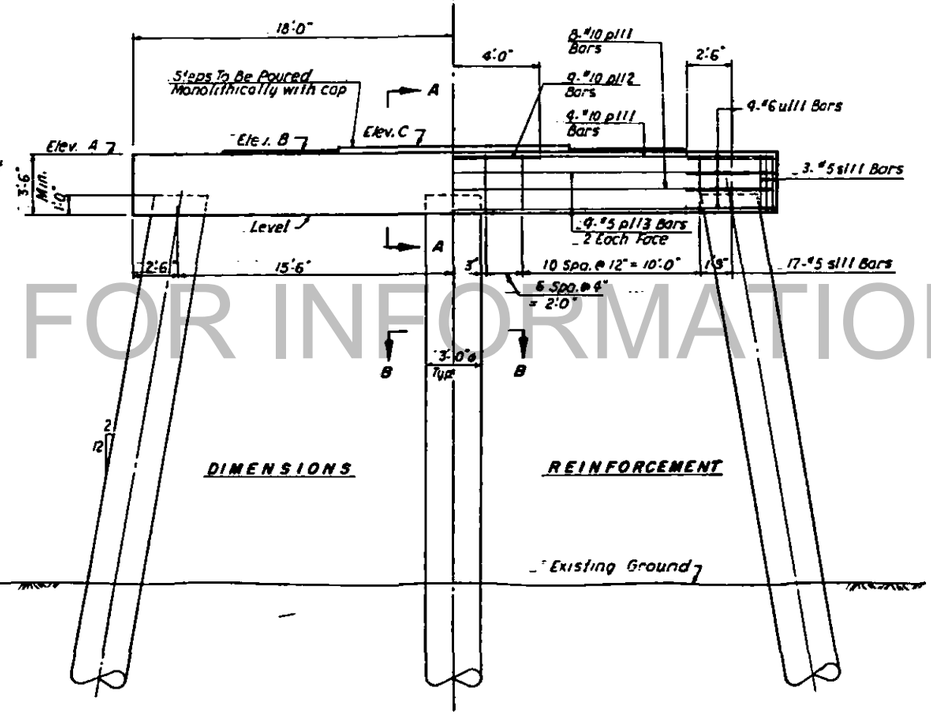

DIMENSIONS

REINFORCEMENT

ELEVATION

FOR INFORMATION ONLY

Use For W.B. & E.B. Structures
For Section B-B, See Sheet 98

CONSOER, TOWNSEND & ASSOCIATES
CONSULTING ENGINEERS CHICAGO, ILLINOIS

ILLINOIS DIVISION OF HIGHWAYS
FAI ROUTE 64 BRIDGE OVER WABASH RIVER
F.A.I. 64 SECTION 97-3B
WHITE COUNTY, ILLINOIS
POSEY COUNTY, INDIANA

BENTS 10 & 14

DMP	LM	F.H.	DMP			

TABLE OF ELEVATIONS AND STATIONS

Bent	Elevation A	Elevation B	Elevation C	Station
9	401.12	401.25	401.32	58897+97
11	400.62	400.75	400.82	58894+63
13	400.22	400.35	400.42	58901+97
15	399.72	399.85	399.92	58892+63

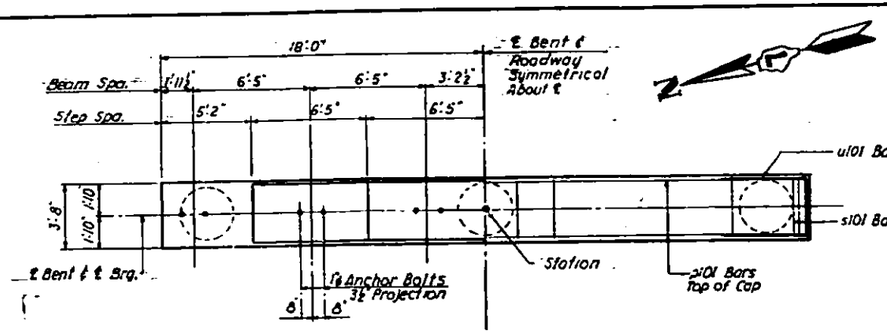

TOP PLAN

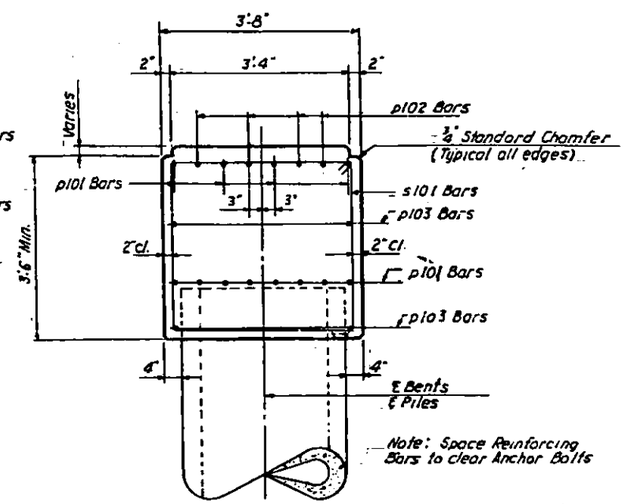

SECTION A-A

FAI RTE. NO.	SECTION	COUNTY	TOTAL SHEETS	SHEET NO.
64	97-3B	White	103	54
PROJECT NO.				

BILL OF MATERIAL

Bar	No.	Size	Length	Shape
p101	12	10	35'-6"	
p102	4	10	9'-6"	
p103	4	5	35'-6"	
s101	40	5	14'-2"	
u101	8	6	12'-10"	
Reinforcement Bars (Lbs.)				
Class X Concrete				
36" Prestressed Conc. Cylinder Piles 3 @ 24'				

Quantities Shown are for Filling Bents

Note: Min. length of penetration of piles into existing ground 70 lin. ft.

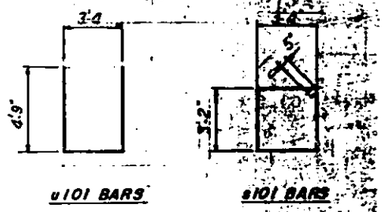

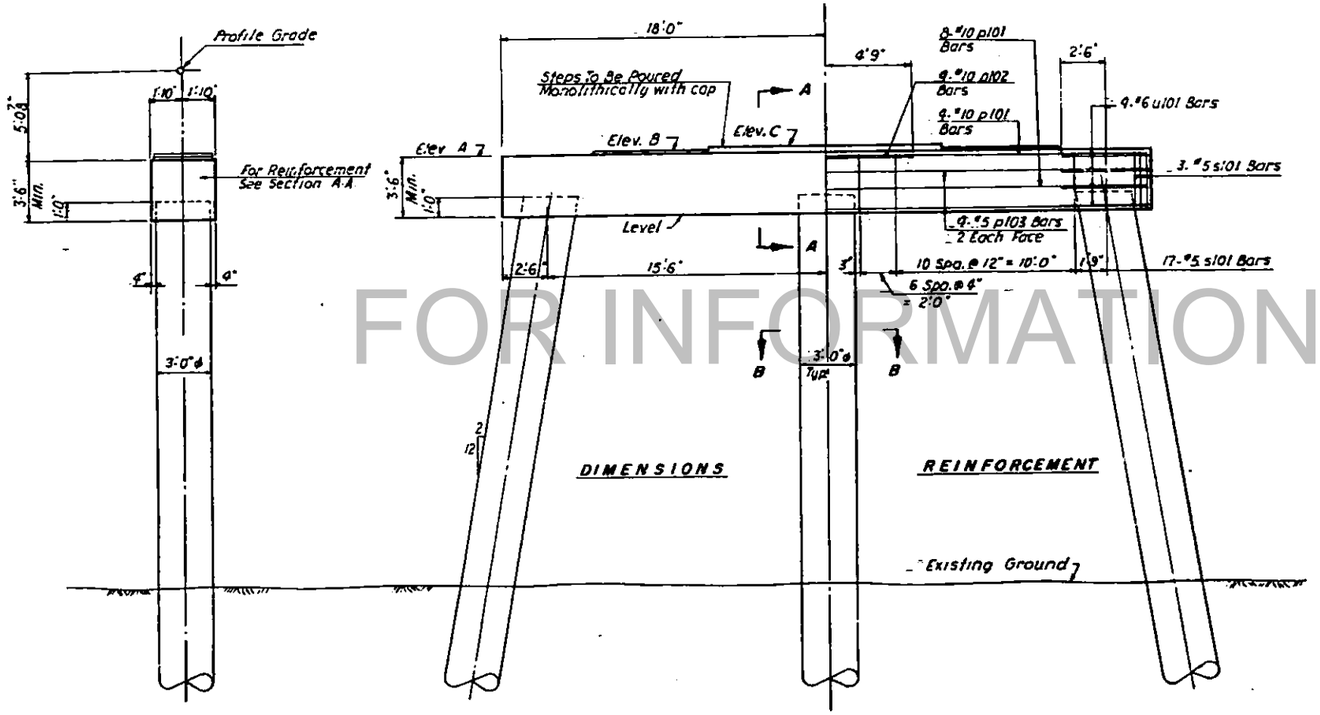

END VIEW

ELEVATION

FOR INFORMATION ONLY

Use For W.B. & E.B. Structures
For Section B-B, See Sheet 54

CONSOER, TOWNSEND & ASSOCIATES
CONSULTING ENGINEERS

ILLINOIS DIVISION OF HIGHWAYS
FAI ROUTE 64 BRIDGE OVER [illegible]
FAI 64 SECTION [illegible]
WHITE COUNTY, ILLINOIS
POSEY COUNTY, INDIANA

BENTS 9, 11, 13 & 15

DMP