STATE OF ILLINOIS
DEPARTMENT OF TRANSPORTATION

Various Routes
OVD SIN STR REP & REPL 2007-9
Various Counties
Sheet 12 of 50
Contract Number 44933

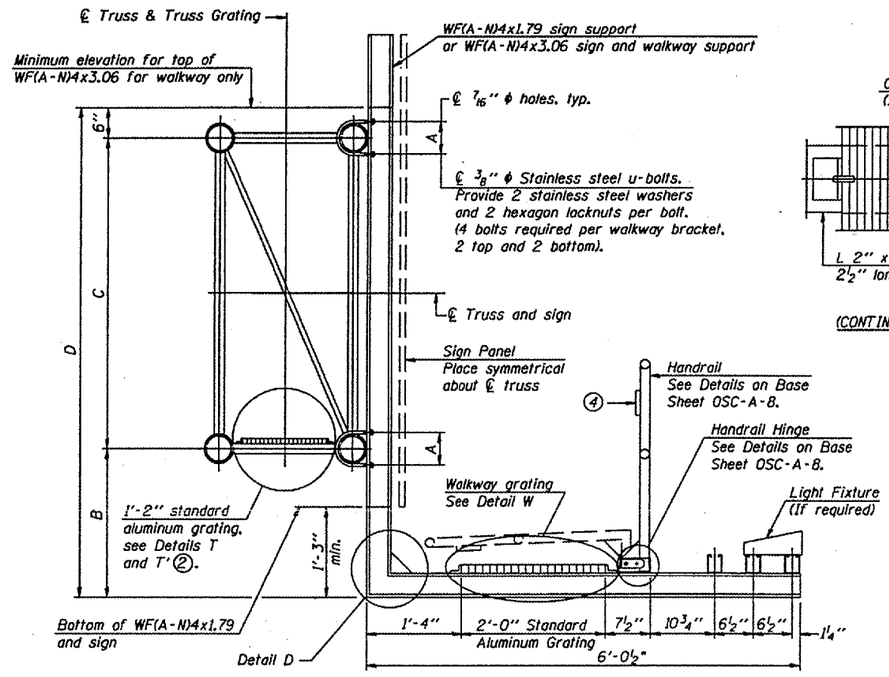

SECTION B-B

Sign shall be even with the top of the bracket, but it may extend no more than 6" above the top of the bracket for field adjustments.

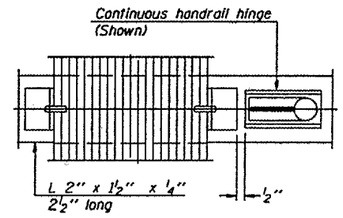

(CONTINUOUS WALKWAY GRATING)

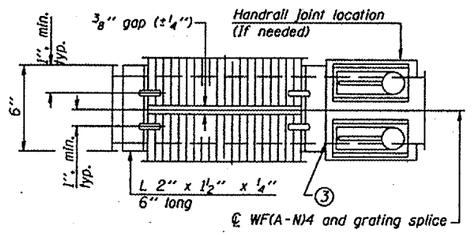

(AT WALKWAY GRATING SPLICE)

SECTION W-W

SPECIFICATIONS FOR STANDARD ALUMINUM GRATING

Main Bearing Bars (MBB) shall be 3/16" x 1½" on 1 3/16" centers and conform to ASTM B211 Alloy 6061-T6.

Cross bars (CB) shall be 3/16" x 1½" on 4" centers and conform to ASTM B221 Alloy 6063-T5 or 6061-T6.

OR

Aluminum Grating with modified "T" sections for main bearing bars shall meet the following requirements:

Main bars shall conform to ASTM B221 Alloy 6061-T6 and have a minimum section modulus equal to 0.0705 in.³ per bar, a depth of 1½", spaced on 1 3/16" centers.

Cross bars shall conform to ASTM B221 Alloy 6063-T5 or T-42 and spaced on 4" centers.

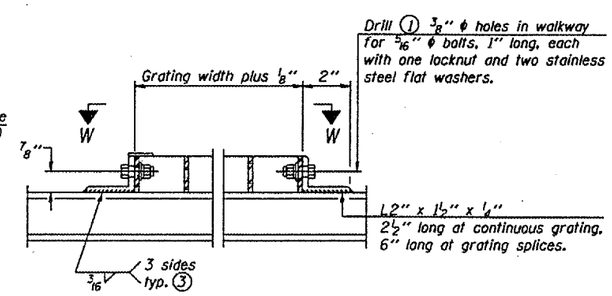

DETAIL W
(Walkway grating)

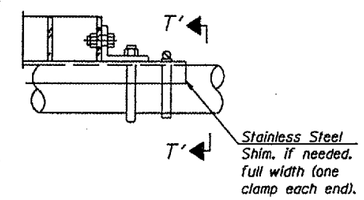

DETAIL T'
(Truss grating splice)
Details not shown same as Detail T.
Alternate materials may be used subject to the Engineer's review and approval.

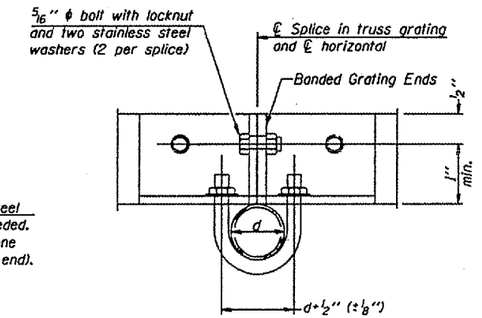

SECTION T'-T'

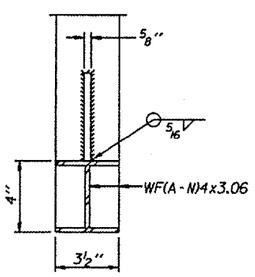

SECTION D-D

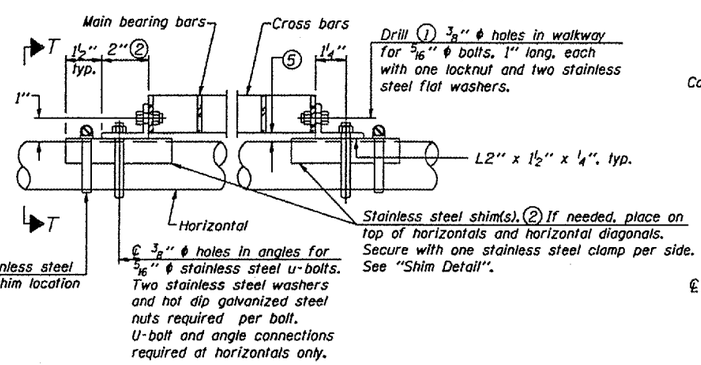

DETAIL T
(Continuous Truss grating)

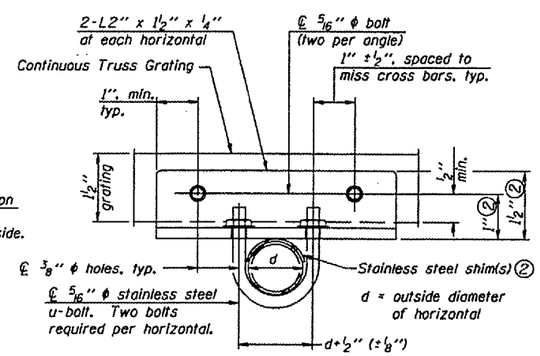

SECTION T-T

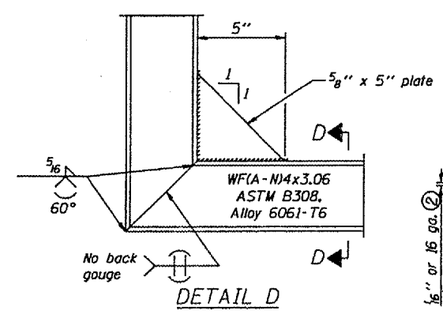

DETAIL D

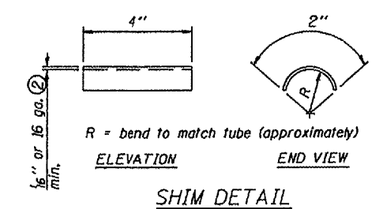

SHIM DETAIL

This Sheet For Information Only

NUMBER	REVISION	DATE

DESIGNED	-
CHECKED	-
DRAWN	-
CHECKED	-

- 20
EXAMINED
ENGINEER OF BRIDGE DESIGN
PASSED
ENGINEER OF BRIDGES AND STRUCTURES

① Drilling holes in grating may be done in shop or field, based on Contractor's preference and subject to accurate alignment.

② Stainless steel shims shall be placed as shown in Detail T if needed to compensate for alignment variations between horizontal and diagonal pipes beyond adjustment provided by angles. Thicker shims may be used subject to shims performing properly.

③ If Handrail Joint present, weld angle to WF(A-N)4 and ¼" extension bars. (See Base Sheet OSC-A-8.)

④ ℄ ⅛" x ½" x 2" welded to handrail posts to protect locations that contact grating.

⑤ Tube to grating gap may vary from 0 to ½", max. to align walkway, allow for camber, etc.

Structure Number	Station	A	B	C	D

CANTILEVER SIGN STRUCTURES
WALKWAY DETAILS
ALUMINUM TRUSS & STEEL POST

District 1
Handrail Replacement for
Vierendeel Sign
Structure-Cantilever

OSC-A-7 7/01/2006